DAB
WATER•TECHNOLOGY

SWIMMING POOL, POND, AND SALT WATER PUMPS

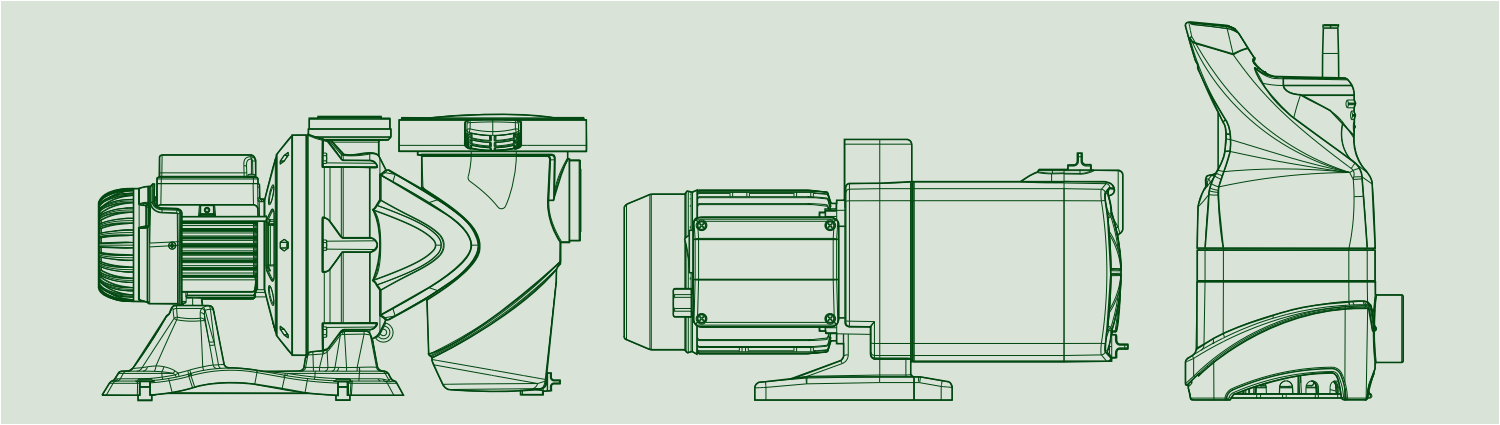

TECHNICAL CATALOGUE

IQNet®

THE INTERNATIONAL CERTIFICATION NETWORK

CERTIFICATE

IQNet and its partner
CISQ/IMQ-CSQ
hereby certify that the organization

DWT HOLDING SPA
VIA MARCO POLO 14 - 35035 MESTRINO (PD)
BRENDOLA (VI) - CASTELLO DI GODEGO (TV) - BIENTINA (PI) -
SAN GERMANO DEI BERICI (VI) - GESSATE (MI) -
PRC CHINA

for the following field of activities

Design, production, sale and assistance of components and electronic controls for pumps, electropumps, and pump sets for cold and hot water for civil, industrial and agricultural use

Refer to quality manual for details of applications to ISO 9001:2008 requirements

has implemented and maintains a

Quality Management System

which fulfills the requirements of the following standard

ISO 9001:2008

Issued on: 2013 - 09 - 23 Expiry date: 2015 - 06 - 15

Registration Number: IT - 824

Michael Drechsel
President of IQNET

Ing. Claudio Provetti
President of CISQ

IQNet Partners*:
AENOR *Spain* AFNOR Certification *France* AIB-Vincotte International *Belgium* ANCE-SIGE *Mexico* APCER *Portugal* CCC *Cyprus* CISQ *Italy* CQC *China* CQM *China* CQS *Czech Republic* Cro Cert *Croatia* DQS Holding GmbH *Germany* DS *Denmark* FCAV *Brazil* FONDONORMA *Venezuela* ICONTEC *Colombia* IMNC *Mexico* INNORPI *Tunisia* Inspecta Certification *Finland* IRAM *Argentina* JQA *Japan* KFQ *Korea* MIRTEC *Greece* MSZT *Hungary* Nemko AS *Norway* NSAI *Ireland* PCBC *Poland* Quality Austria *Austria* RR *Russia* SII *Israel* SIQ *Slovenia* SIRIM QAS International *Malaysia* SQS *Switzerland* SRAC *Romania* TEST St Petersburg *Russia* TSE *Turkey* YUQS *Serbia*
IQNet is represented in the USA by: AFNOR Certification, CISQ, DQS Holding GmbH and NSAI Inc.
* The list of IQNet partners is valid at the time of issue of this certificate. Updated information is available under www.iqnet-certification.com

All. 1 di 1
Ann. 1 of 1

CSQ
www.imq.it

CISQ is a member of IQNet
www.iqnet-certification.com

IQNet, the association of the world's first class certification bodies, is the largest provider of management System Certification in the world. IQNet is composed of more than 30 bodies and counts over 150 subsidiaries all over the globe.

ALLEGATO CERTIFICATO n. **9101.COGE**

ANNEX CERTIFICATE

(*) Unità Operative:
(*) Operative Units:

DAB PUMPS SPA
VIA BONANNO PISANO 1 - 56031 BIENTINA (PI)

TESLA SRL
VIA DEL LAVORO 3 - 36040 SAN GERMANO DEI BERICI (VI)

TESLA SRL
VIA BERGAMO 2 - 20060 GESSATE (MI)

DAB PUMPS QINGDAO CO. LTD.
40 KAITUO ROAD, QINGDAO DEVELOPMENT ZONE - SHANGDONG PROVINCE, PRC CHINA

DATE:	PRIMA CERTIFICAZIONE *FIRST CERTIFICATION*	EMISSIONE CORRENTE *CURRENT ISSUE*	SCADENZA *EXPIRY*
	1995-07-17	2013-09-23	2015-06-15

IMQ S.p.A. - VIA QUINTILIANO, 43 - 20138 MILANO

CISQ è la Federazione Italiana di Organismi di Certificazione dei sistemi di gestione aziendale.

CISQ is the Italian Federation of management system Certification Bodies.

FEDERAZIONE CISQ
www.cisq.com

ACCREDIA
EA: 18, 19

La validità del certificato è subordinata a sorveglianza annuale e riesame completo del Sistema di Gestione con periodicità triennale
The validity of the certificate is submitted to annual audit and a reassessment of the entire Management System within three years

CSQ
www.imq.it

CISQ is a member of IQNet
www.iqnet-certification.com

IQNet, the association of the world's first class certification bodies, is the largest provider of management System Certification in the world. IQNet is composed of more than 30 bodies and counts over 150 subsidiaries all over the globe.

CERTIFICATO N.
CERTIFICATE N. **9101.COGE**

SI CERTIFICA CHE IL SISTEMA QUALITA' DI
WE HEREBY CERTIFY THAT THE QUALITY SYSTEM OPERATED BY

DWT HOLDING SPA
VIA MARCO POLO 14 - 35035 MESTRINO (PD)

UNITA' OPERATIVE
OPERATIVE UNITS

DAB PUMPS
VIA MARCO POLO 14 - 35035 MESTRINO (PD)
DAB PUMPS
VIA EINAUDI 2 - 36040 BRENDOLA (VI)
DAB PUMPS
VIA E. FERMI 6-8-10 - 31030 CASTELLO DI GODEGO (TV)

Vedere gli Allegati per le altre Unità Operative (n° 1 pagina)
View the Annexes for the other Operative Units (n° 1 page)

E' CONFORME ALLA NORMA
IS IN COMPLIANCE WITH THE STANDARD

ISO 9001:2008

PER LE SEGUENTI ATTIVITA'
FOR THE FOLLOWING ACTIVITIES

Progettazione, produzione, vendita e assistenza di componenti e controlli elettronici per pompe, elettropompe e gruppi di pompaggio per acqua fredda e calda ad uso civile, industriale ed agricolo
Design, production, sale and assistance of components and electronic controls for pumps, electropumps, and pump sets for cold and hot water for civil, industrial and agricultural use

Riferirsi al manuale della qualità per l'applicabilità dei requisiti della norma ISO 9001:2008
Refer to quality manual for details of applications to ISO 9001:2008 requirements

IL PRESENTE CERTIFICATO E' SOGGETTO AL RISPETTO DEL REGOLAMENTO PER LA CERTIFICAZIONE DEI SISTEMI DI GESTIONE
THE USE AND THE VALIDITY OF THE CERTIFICATE SHALL SATISFY THE REQUIREMENTS OF THE RULES FOR CERTIFICATION OF MANAGEMENT SYSTEMS

DATE:	PRIMA CERTIFICAZIONE *FIRST CERTIFICATION*	EMISSIONE CORRENTE *CURRENT ISSUE*	SCADENZA *EXPIRY*
	1995-07-17	2013-09-23	2015-06-15

IMQ S.p.A. - VIA QUINTILIANO, 43 - 20138 MILANO

CISQ è la Federazione Italiana di Organismi di Certificazione dei sistemi di gestione aziendale.

CISQ is the Italian Federation of management system Certification Bodies.

FEDERAZIONE CISQ
www.cisq.com

ACCREDIA
EA: 18, 19

La validità del certificato è subordinata a sorveglianza annuale e riesame completo del Sistema di Gestione con periodicità triennale
The validity of the certificate is submitted to annual audit and a reassessment of the entire Management System within three years

CONTENTS

SWIMMING POOL PUMPS

EUROPRO

PAGE 3

EUROCOVER

PAGE 37

EUROPRO HIGH FLOW

PAGE 10

JETCOM SP - EUROCOM SP

PAGE 39

PREFILTER RANGE

PAGE 15

SALT WATER PUMPS

MULTI 4 SW

PAGE 42

NOVA SALT W

PAGE 44

POND PUMPS

NOVAPOND

PAGE 46

NINPHAEA

PAGE 48

ACCESSORIES

PAGE 51

TECHNICAL APPENDIX

PAGE 53

DAB PUMPS reserves the right to make modifications without notice.

EUROPRO

SWIMMING POOL CENTRIFUGAL ELECTRIC PUMPS

TECHNICAL DATA

Operating range: up to 42 m^3/h with head of up to 22 metres.
Pumped liquid: clean water, or slightly contaminated water with suspended solid debris, or long fibres; highly aggressive water with high percentage of chlorine/bromine and PHMB (Polyhexamethylene biguanide), or chlorine electrolysis treated water.
PH Range: 6,5-8,4.
Pumped liquid temperature range: up to 60 °C.
Maximum ambient temperature: 50 °C.
Maximum operating pressure: 2.5 bar.
Nominal working pressure: 0,8 - 1,2 Bar (ideally 1 Bar).
Installation: fixed or portable, horizontal position.
Special executions on requests: alternative frequencies and voltages.
Connectors on request: 2”/50 - 63 (two connectors+O-ring - see "Accessories") kit.
Standard of reference: IEC - 60364.
Protection class of the motor and the terminal box: IP55.
Protection class at the terminal board: IP 55.
Insulation class: F
Standard voltage: single-phase 220/240 V - 50 Hz.
three-phase 230/400 V - 50 Hz

APPLICATIONS

High performance self-priming centrifugal electric pumps with built-in high capacity prefilter. Motor completely isolated from the water. Extremely quiet and highly reliable, developed for water circulation and filtration in domestic and residential swimming pools. Also suitable for specific applications requiring handling of aggressive liquids in the fishing, agricultural, and industrial sectors.

CONSTRUCTION FEATURES OF THE PUMP

Fibreglass reinforced technopolymer pump body. Transparent antioxidant polycarbonate prefilter cover ensuring constant visibility over the long period. Nylon strainer. Fibreglass reinforced technopolymer impeller designed to ensure total cover and insulation of the motor shaft from the pumped liquid. Reinforced technopolymer diffuser. Carbon / alumina / NBR / AISI 316 mechanical seal. NBR pump body O-ring, AISI 316 stainless steel reinforcement ring nuts and screws. Butterfly filling and drain plugs that can be removed and refitted without tools.

CONSTRUCTION FEATURES OF THE MOTOR

Continuous service 2-pole asynchronous motor (S1) with a wide power range, from 0,5 HP to 3 HP, both single and three phase (see technical specifications). Die cast aluminium motor casing with cataphoresis paint coating to avoid oxidation also in aggressive environments. Support base supplied with rubber feet to reduce vibrations. Single phase version with built-in thermal and current protection, and permanent split capacitor (PSC) inside the terminal box for all versions.

MATERIALS

N.	PARTS*	MATERIALS
1	PUMP BODY	REINFORCED TECHNOPOLYMER
4	IMPELLER	REINFORCED TECHNOPOLYMER
6	DIFFUSER	REINFORCED TECHNOPOLYMER
8	STRAINER COVER	POLYCARBONATE
10	STRAINER	TECHNOPOLYMER
16	MECHANICAL SEAL	CARBON/ALUMINA/NBR/AISI316
28	O-RING	NBR
29	O-RING	NBR
39	SEAL HOLDING DISC	REINFORCED, STABILISED TECHNOPOLYMER

* In contact with the liquid

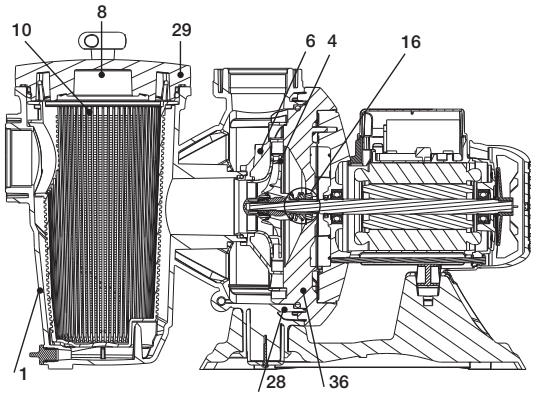

EUROPRO 50 - SWIMMING POOL CENTRIFUGAL ELECTRIC PUMPS

Pumped liquid temperature range: up to 60 °C - **Maximum ambient temperature:** +50 °C

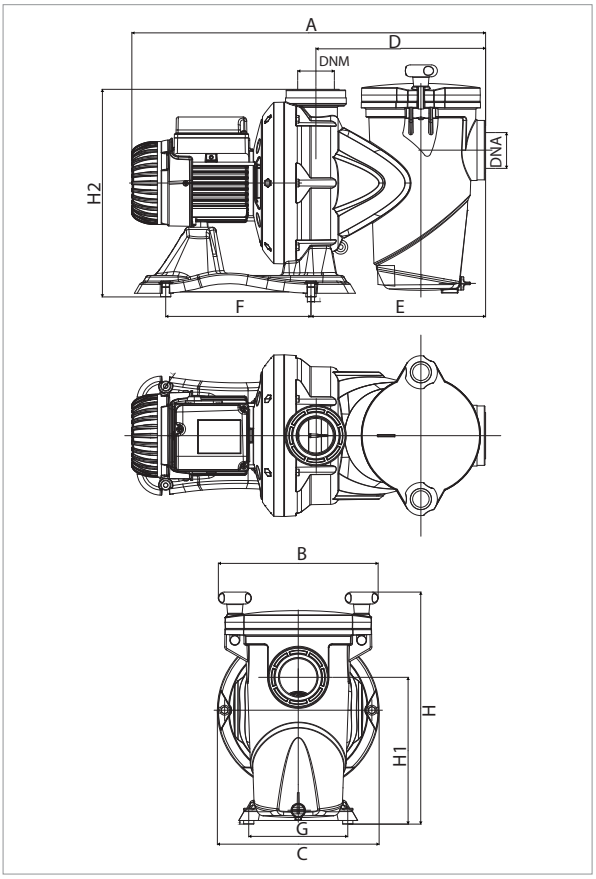

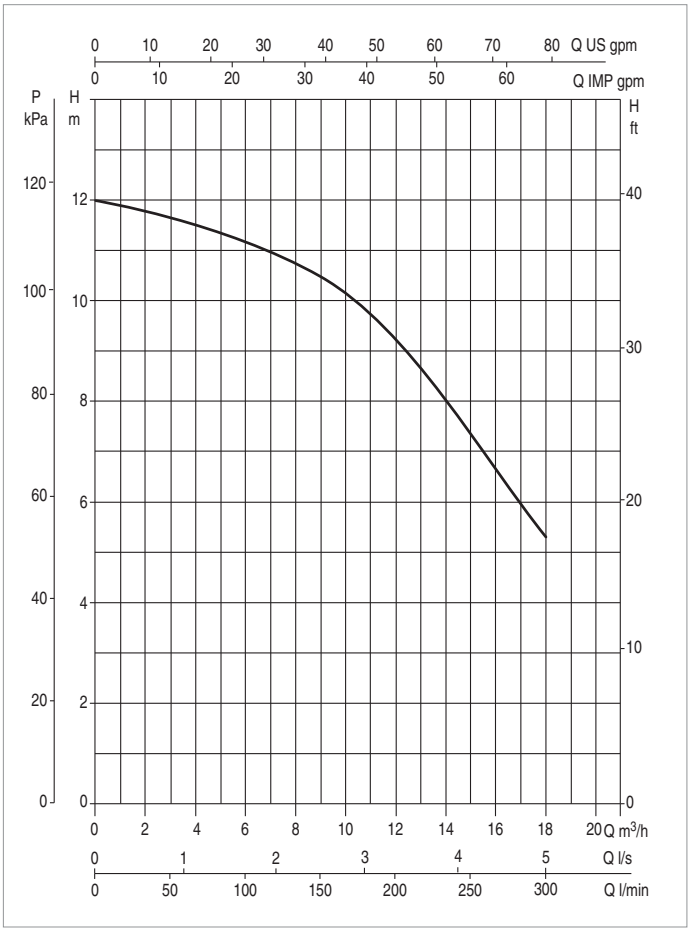

The performance curves are based on kinematic viscosity values = 1 mm^2/s and density equal to 1000 kg/m^3. Curve tolerance according to ISO 9906.

MODEL	Q= m^3/h	0	3	6	9	12	18	21	24	30	36	42
	Q=l/min	0	50	100	150	200	300	350	400	500	600	700
EUROPRO 50 M	H (m)	12,0	11,7	11,2	10,5	9,3	5,3					

MODEL	POWER INPUT 50 Hz	P1 MAX W	P2 NOMINAL		In A	CAPACITOR		NOISE LEVEL MAX db (A)
			kW	HP		µF	Vc	
EUROPRO 50 M	1 x 220 - 240 V ~	900	0,33	0,5	4,2	16	450	64

MODEL	A	B	C	D	E	F	G	H	H1	H2	I	L	DNA	DNM	PACKING DIMENSIONS			GROSS WEIGHT kg	Q.TY X PALLET
															L/A	L/B	H		
EUROPRO 50 M	536	242	242	257	265	220	150	351	222	314	11	6,5	2"	2"	600	360	400	16	8

DAB PUMPS reserves the right to make modifications without notice.

EUROPRO 75 - SWIMMING POOL CENTRIFUGAL ELECTRIC PUMPS

Pumped liquid temperature range: up to 60 °C - **Maximum ambient temperature:** +50 °C

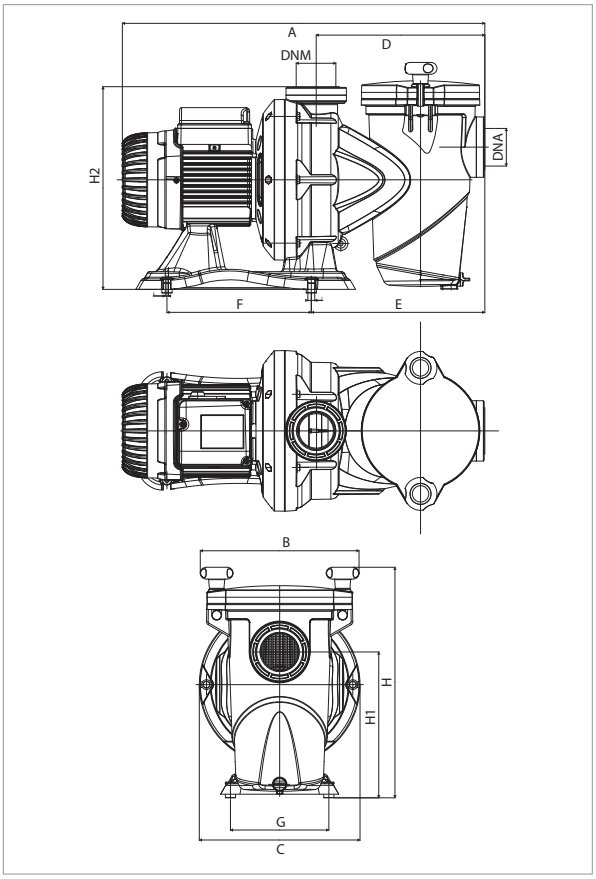

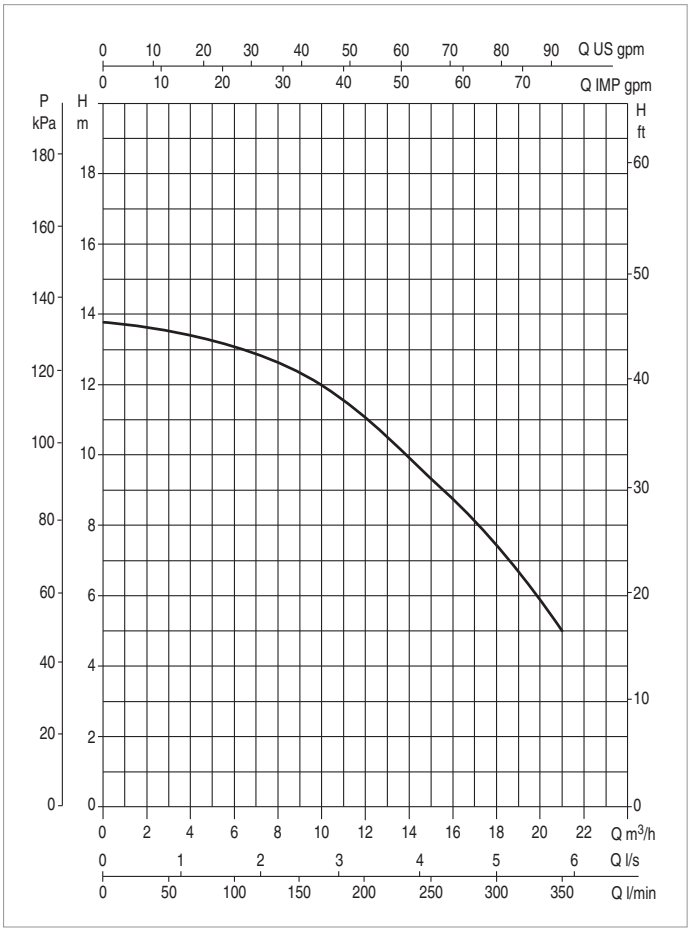

The performance curves are based on kinematic viscosity values = 1 mm^2/s and density equal to 1000 kg/m^3. Curve tolerance according to ISO 9906.

MODEL	Q= m^3/h	0	3	6	9	12	18	21	24	30	36	42
	Q=l/min	0	50	100	150	200	300	350	400	500	600	700
EUROPRO 75 M-T	H (m)	13,8	13,5	13,1	12,4	11,1	7,5	5				

MODEL	POWER INPUT 50 Hz	P1 MAX W	P2 NOMINAL		In A	CAPACITOR		NOISE LEVEL MAX db (A)
			kW	HP		µF	Vc	
EUROPRO 75 M	1 x 220 - 240 V ~	1000	0,5	0,75	5	20	450	65
EUROPRO 75 T	3 x 230-400 V ~	950	0,5	0,75	3.5 / 2	–	–	65

MODEL	A	B	C	D	E	F	G	H	H1	H2	I	L	DNA	DNM	PACKING DIMENSIONS			GROSS WEIGHT kg	Q.TY X PALLET
															L/A	L/B	H		
EUROPRO 75 M	552	242	245	257	265	220	150	351	222	314	11	6,5	2"	2"	600	360	400	16,5	8
EUROPRO 75 T	552	242	245	257	265	220	150	351	222	314	11	6,5	2"	2"	600	360	400	16,5	8

DAB PUMPS reserves the right to make modifications without notice.

EUROPRO 100 - SWIMMING POOL CENTRIFUGAL ELECTRIC PUMPS

Pumped liquid temperature range: up to 60 °C - Maximum ambient temperature: +50 °C

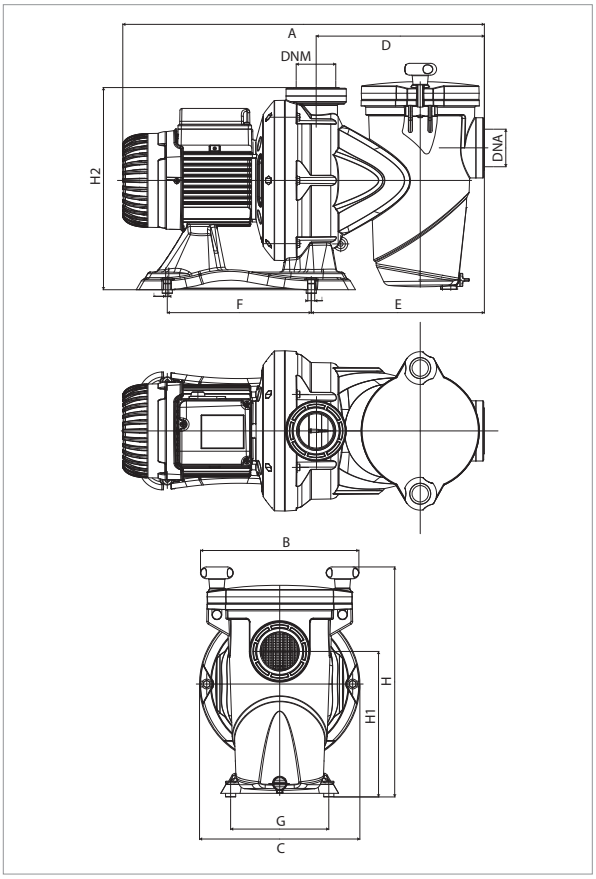

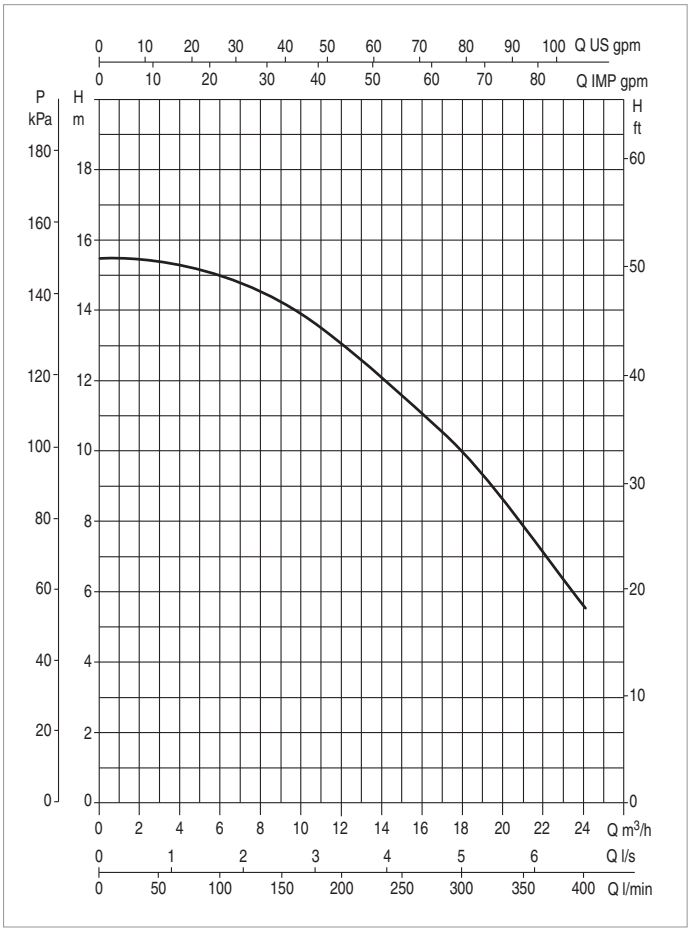

The performance curves are based on kinematic viscosity values = 1 mm^2/s and density equal to 1000 kg/m^3. Curve tolerance according to ISO 9906.

MODEL	Q= m^3/h	0	3	6	9	12	18	21	24	30	36	42
	Q=l/min	0	50	100	150	200	300	350	400	500	600	700
EUROPRO 100 M-T	H (m)	15,4	15,4	15	14,2	13,1	10,0	7,8	5,6			

MODEL	POWER INPUT 50 Hz	P1 MAX W	P2 NOMINAL		In A	CAPACITOR		NOISE LEVEL MAX db (A)
			kW	HP		µF	Vc	
EUROPRO 100 M	1 x 220-240 V ~	1300	0,75	1	6,3	25	450	66
EUROPRO 100 T	3 x 230-400 V ~	1200	0,75	1	4 / 2.4	–	–	66

MODEL	A	B	C	D	E	F	G	H	H1	H2	I	L	DNA	DNM	PACKING DIMENSIONS			GROSS WEIGHT kg	Q.TY X PALLET
															L/A	L/B	H		
EUROPRO 100 M	552	242	245	257	265	220	150	351	222	314	11	6,5	2"	2"	600	360	400	17	8
EUROPRO 100 T	552	242	245	257	265	220	150	351	222	314	11	6,5	2"	2"	600	360	400	17	8

DAB PUMPS reserves the right to make modifications without notice.

EUROPRO 150 - SWIMMING POOL CENTRIFUGAL ELECTRIC PUMPS

Pumped liquid temperature range: up to 60 °C - Maximum ambient temperature: +50 °C

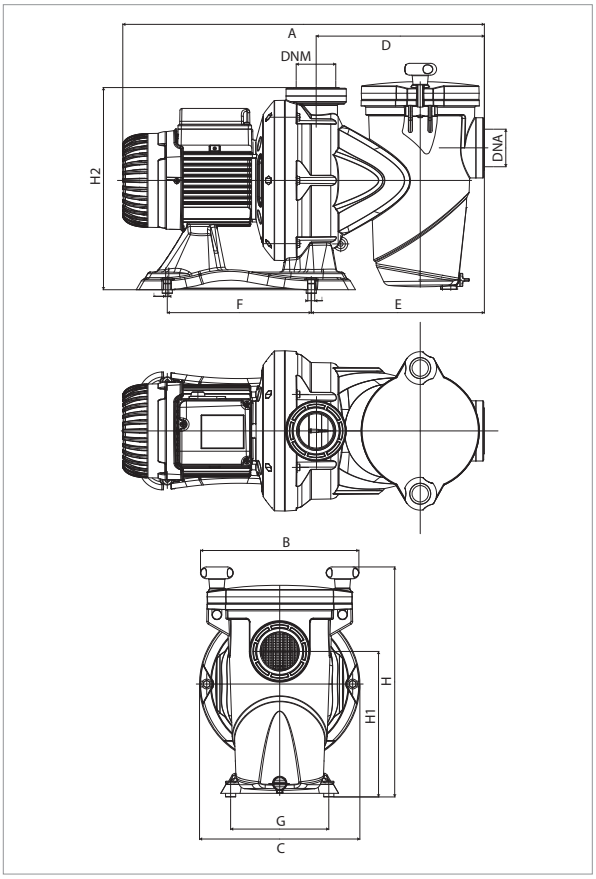

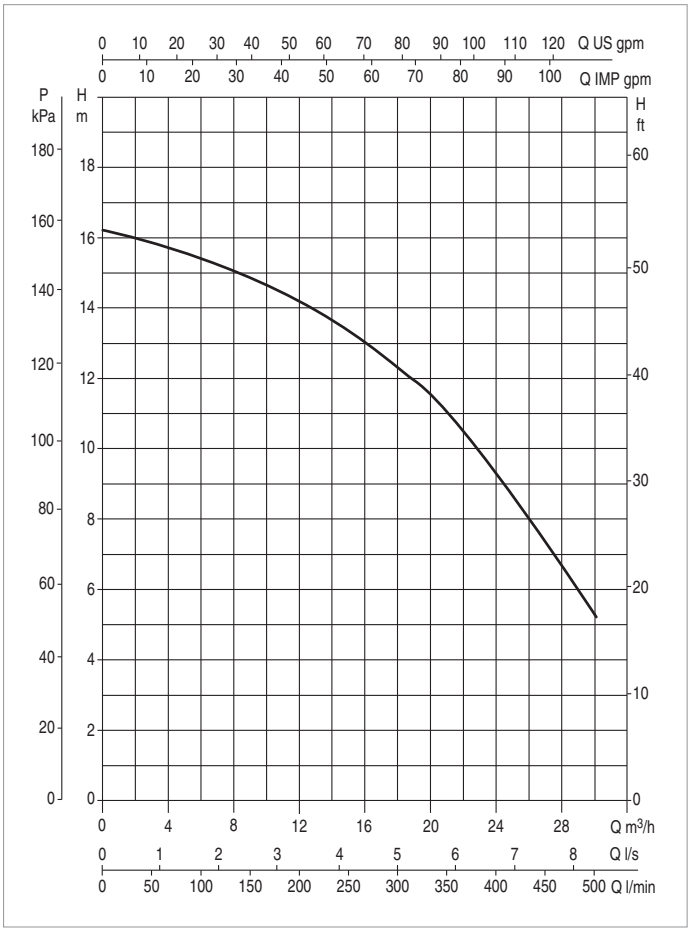

The performance curves are based on kinematic viscosity values = 1 mm^2/s and density equal to 1000 kg/m^3. Curve tolerance according to ISO 9906.

MODEL	Q= m^3/h	0	3	6	9	12	18	21	24	30	36	42
	Q=l/min	0	50	100	150	200	300	350	400	500	600	700
EUROPRO 150 M-T	H (m)	16,2	15,9	15,4	14,9	14,2	12,4	11,1	9,3	5,3		

MODEL	POWER INPUT 50 Hz	P1 MAX W	P2 NOMINAL		In A	CAPACITOR		NOISE LEVEL MAX db (A)
			kW	HP		µF	Vc	
EUROPRO 150 M	1 x 220-240 V ~	1600	1,1	1,5	7	31,5	450	66
EUROPRO 150 T	3 x 230-400 V ~	1500	1,1	1,5	6.5 / 3.7	–	–	66

MODEL	A	B	C	D	E	F	G	H	H1	H2	I	L	DNA	DNM	PACKING DIMENSIONS			GROSS WEIGHT kg	Q.TY X PALLET
															L/A	L/B	H		
EUROPRO 150 M	574	250	290	267	274	220	150	387	258	350	11	6,5	2"	2"	720	350	430	22	6
EUROPRO 150 T	574	250	290	267	274	220	150	387	258	350	11	6,5	2"	2"	720	350	430	22	6

DAB PUMPS reserves the right to make modifications without notice.

EUROPRO 200 - SWIMMING POOL CENTRIFUGAL ELECTRIC PUMPS

Pumped liquid temperature range: up to 60 °C - Maximum ambient temperature: +50 °C

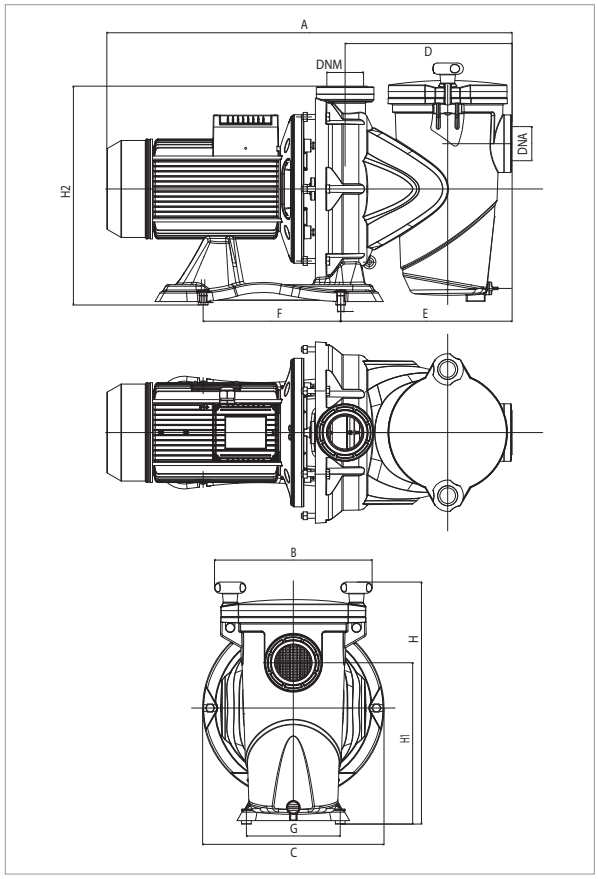

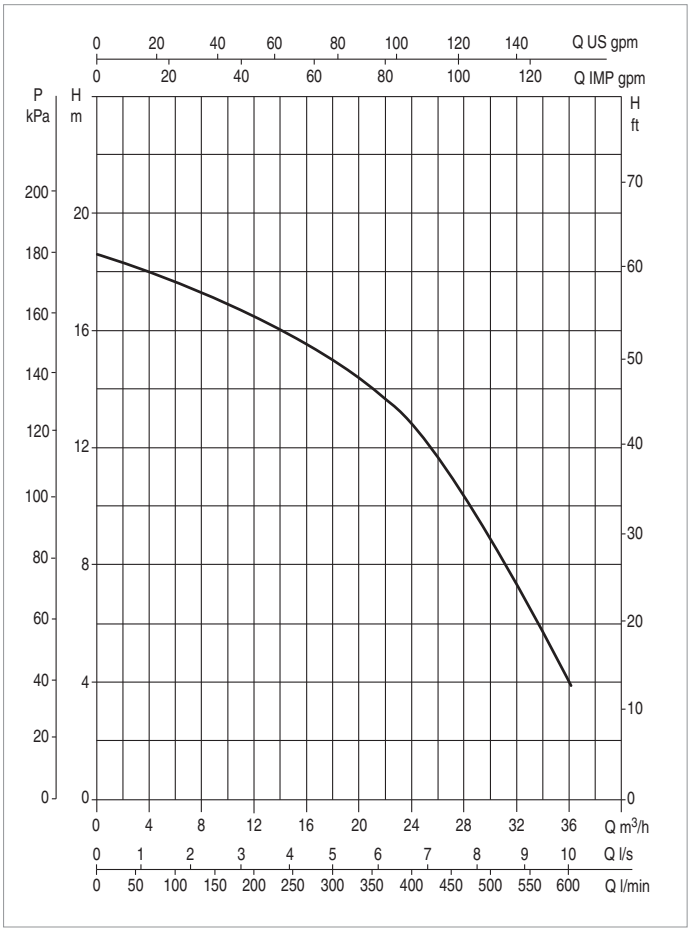

The performance curves are based on kinematic viscosity values = 1 mm^2/s and density equal to 1000 kg/m^3. Curve tolerance according to ISO 9906.

MODEL	Q= m^3/h	0	3	6	9	12	18	21	24	30	36	42
	Q=l/min	0	50	100	150	200	300	350	400	500	600	700
EUROPRO 200 M-T	H (m)	18,6	18,2	17,7	17,1	16,5	15,0	14,1	12,8	9,0	4	

MODEL	POWER INPUT 50 Hz	P1 MAX W	P2 NOMINAL		In A	CAPACITOR		NOISE LEVEL MAX db (A)
			kW	HP		µF	Vc	
EUROPRO 200 M	1 x 220-240 V ~	1900	1,5	2	8,6	40	450	67
EUROPRO 200 T	3 x 230-400 V ~	1900	1,5	2	7.2 / 4	–	–	67

MODEL	A	B	C	D	E	F	G	H	H1	H2	I	L	DNA	DNM	PACKING DIMENSIONS			GROSS WEIGHT kg	Q.TY X PALLET
															L/A	L/B	H		
EUROPRO 200 M	648	250	290	267	274	220	150	387	258	350	11	6,5	2"	2"	720	350	430	24	6
EUROPRO 200 T	574	250	290	267	274	220	150	387	258	350	11	6,5	2"	2"	720	350	430	22	6

DAB PUMPS reserves the right to make modifications without notice.

EUROPRO 300 - SWIMMING POOL CENTRIFUGAL ELECTRIC PUMPS

Pumped liquid temperature range: up to 60 °C - **Maximum ambient temperature:** +50 °C

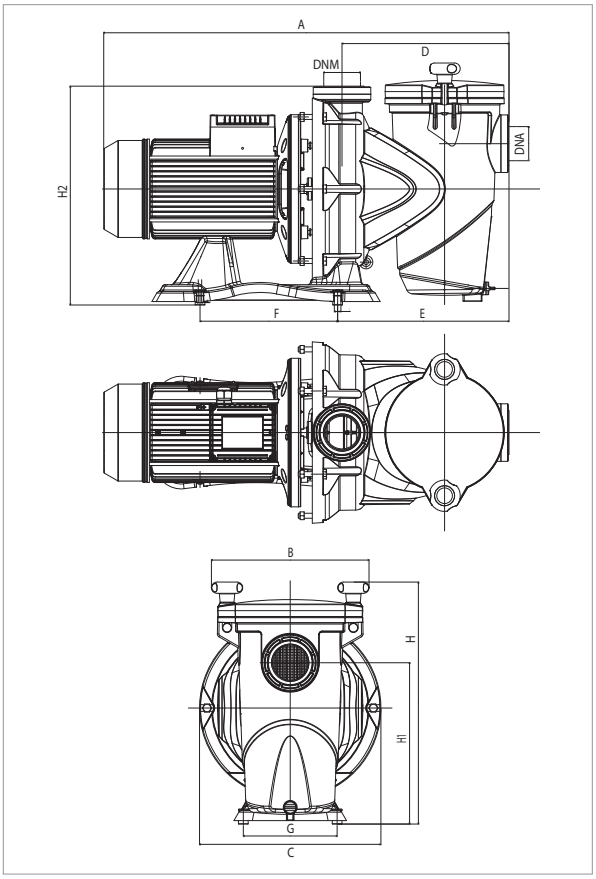

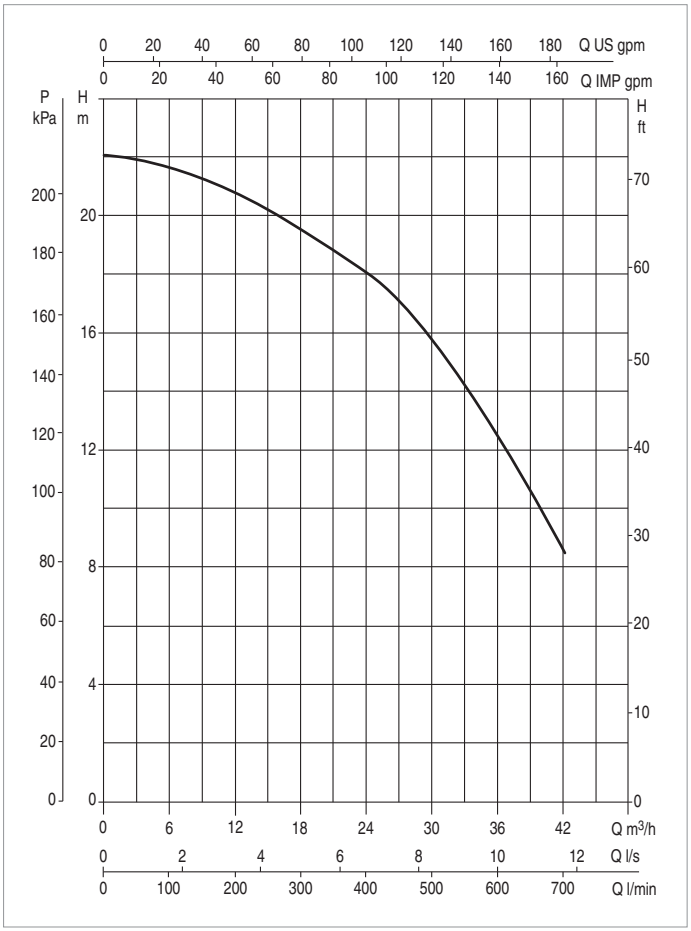

The performance curves are based on kinematic viscosity values = 1 mm^2/s and density equal to 1000 kg/m^3. Curve tolerance according to ISO 9906.

MODEL	Q= m^3/h	0	3	6	9	12	18	21	24	30	36	42
	Q=l/min	0	50	100	150	200	300	350	400	500	600	700
EUROPRO 300 M-T	H (m)	22,0	21,9	21,7	21,3	20,8	19,6	18,9	18,1	15,9	12,5	8,6

MODEL	POWER INPUT 50 Hz	P1 MAX W	P2 NOMINAL		In A	CAPACITOR		NOISE LEVEL MAX db (A)
			kW	HP		µF	Vc	
EUROPRO 300 M	1 x 220-240 V ~	2800	2,2	3	12	40	450	64
EUROPRO 300 T	3 x 230-400 V ~	2800	2,2	3	8.7 / 5	-	-	64

MODEL	A	B	C	D	E	F	G	H	H1	H2	I	L	DNA	DNM	PACKING DIMENSIONS			GROSS WEIGHT kg	Q.TY X PALLET
															L/A	L/B	H		
EUROPRO 300 M	648	252	290	267	274	220	150	387	258	350	11	6,5	2"	2"	720	350	430	24,5	6
EUROPRO 300 T	648	252	290	267	274	220	150	387	258	350	11	6,5	2"	2"	720	350	430	24,5	6

DAB PUMPS reserves the right to make modifications without notice.

EUROPRO HIGH FLOW

SWIMMING POOL CENTRIFUGAL ELECTRIC PUMPS

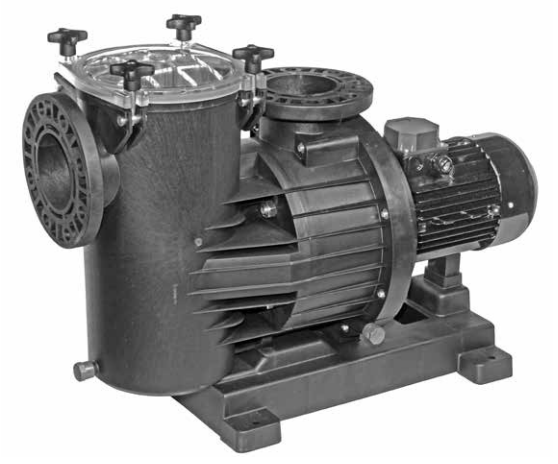

TECHNICAL DATA

Operating range: up to 190 m^3/h with head of up to 22 metres.
Pumped liquid temperature range: up to 40 °C.
Pumped liquid: clean water, slightly dirty water, slightly aggressive water (Polyhexamethylene biguanide), or chlorine electrolysis treated water.
Maximum ambient temperature: 40 °C.
Installation: horizontal position.
Special executions on requests: alternative frequencies and voltages.
Protection class of the terminal board: IP55.
Insulation class: F
Standard voltage: 3 x 230-400V 50 Hz up to 4 Kw
3 x 400-690 V 50 Hz over 4 KW

IE2 motors as standard, from 0,75 kW to 5,5 kW - IE3 ≥ 7,5 kW

APPLICATIONS

High performance self-priming centrifugal electric pumps with built-in high capacity prefilter. 2 or 4 pole motor completely isolated from the water. Extremely quiet and highly reliable, developed for water circulation and filtration in large swimming pool filtration systems. Thanks to the AISI 316 mechanical seal, they are also suitable for specific applications for the circulation of **sea water**.

CONSTRUCTION FEATURES OF THE PUMP:

Prefilter body, pump body, volute, counter volute, and pump body cover in fibre glass reinforced technopolymer resistant to swimming pool chemical agents. Polyethylene prefilter canister. Transparent polycarbonate prefilter cover with four-knob closing system.

CONSTRUCTION FEATURES

External ventilation closed asynchronous motor, 2 or 4 poles, depending on the model, with a wide power range from 3 to 15 HP.

MATERIALS

N.	PARTS	MATERIALS
5	PREFILTER BODY	FIBREGLASS REINFORCED POLYPROPYLENE
27	PUMP BODY	FIBREGLASS REINFORCED POLYPROPYLENE
18	VOLUTE	FIBREGLASS REINFORCED POLYPROPYLENE
13	BASE	FIBREGLASS REINFORCED POLYPROPYLENE
24	PUMP BODY COVER	FIBREGLASS REINFORCED POLYPROPYLENE
4	PREFILTER CANISTER	POLYETHYLENE
2	PREFILTER COVER	POLYCARBONATE
21	IMPELLER	NORYL/BRONZE*
22	MECHANICAL SEAL	CERAMIC, CARBON, AND AISI 316
-	SCREWS	AISI 314
35	SHAFT	AISI 316

* Bronze impeller available on request for Europro 550 T, 750 T and 1000 T models.
* Bronze impeller supplied as standard for Europro 1250 T and 1500 T models.

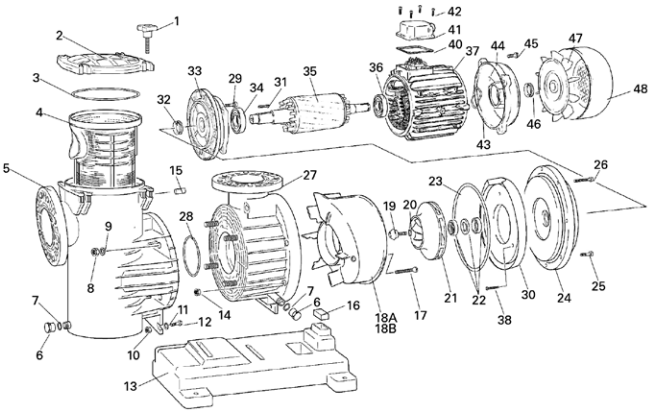

EUROPRO HIGH FLOW 350

CENTRIFUGAL ELECTRIC PUMPS FOR FILTERING SYSTEMS IN PRIVATE AND PUBLIC SWIMMING POOLS AND FOR INDUSTRIAL APPLICATIONS

Pumped liquid temperature range: up to 40 °C - **Maximum ambient temperature:** +40 °C

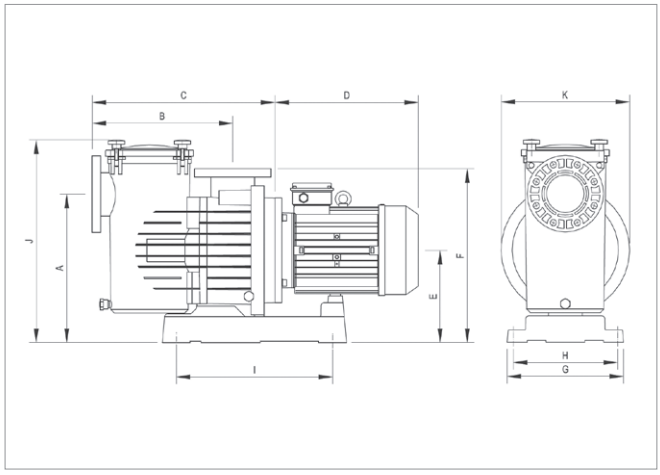

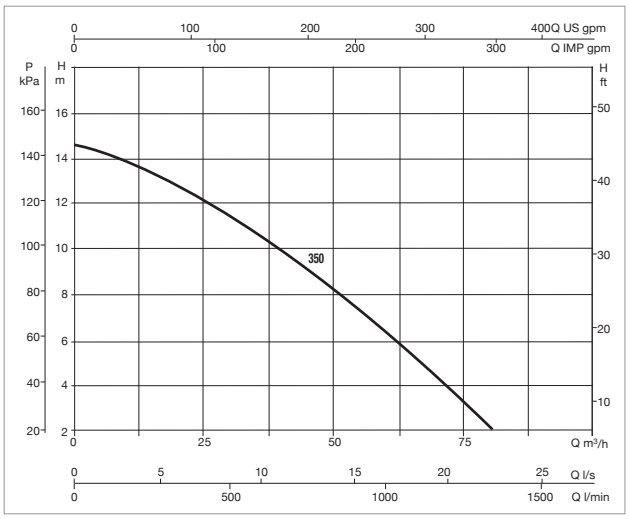

The performance curves are based on kinematic viscosity values = 1 mm²/s and density equal to 1000 kg/m³. Curve tolerance according to ISO 9906.

MODEL	H=m	6	8	10	12	14	16	18	20	22
EUROPRO 350 T	Q (m³/h)	62	51	40	28	8				

MODEL	POWER INPUT 50 Hz	MOTOR TYPE	P1 MAX kW	P2 NOMINAL		In A			No. rpm
				HP	kW	230	400	690	
EUROPRO 350 T	3 x 230-400 V	IE2	2,97	3	2,2	9,4	5,3	-	1450

MODEL	A	B	C	D	E	F	G	H	I	J	K	DNA	DNM	PACKING DIMENSIONS			WEIGHT kg
														L	B	H	
EUROPRO 350 T	428	405	574	310	267	500	335	300	450	600	370	100	100	840	385	595	42,5

EUROPRO HIGH FLOW 400

CENTRIFUGAL ELECTRIC PUMPS FOR FILTERING SYSTEMS IN PRIVATE AND PUBLIC SWIMMING POOLS AND FOR INDUSTRIAL APPLICATIONS

Pumped liquid temperature range: up to 40 °C - **Maximum ambient temperature:** +40 °C

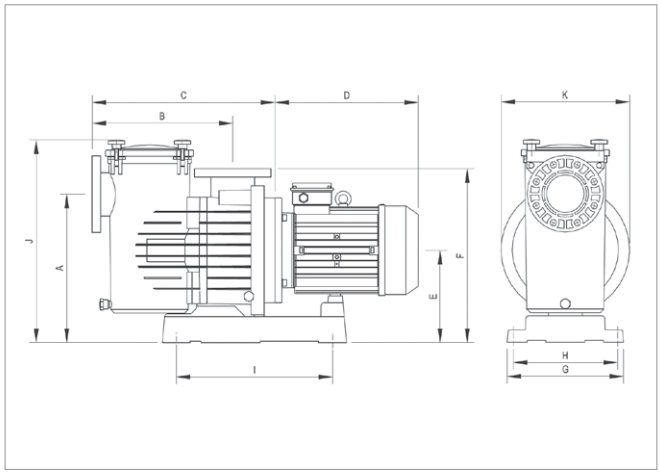

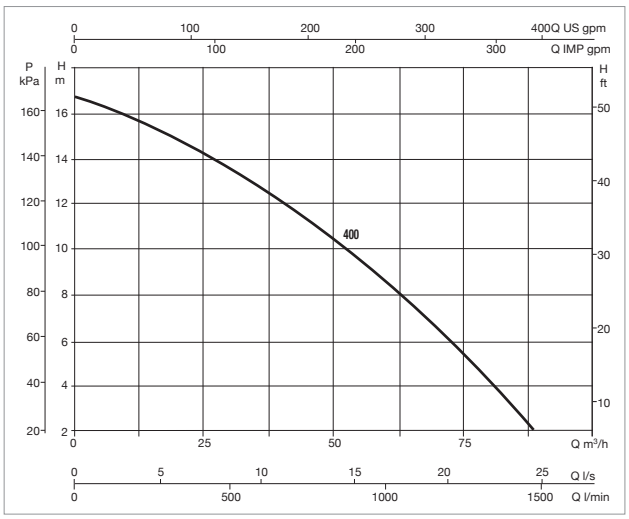

The performance curves are based on kinematic viscosity values = 1 mm²/s and density equal to 1000 kg/m³. Curve tolerance according to ISO 9906.

MODEL	H=m	6	8	10	12	14	16	18	20	22
EUROPRO 400 T	Q (m³/h)	72	63	54	42	28	7			

MODEL	POWER INPUT 50 Hz	MOTOR TYPE	P1 MAX kW	P2 NOMINAL		In A			No. rpm
				HP	kW	230	400	690	
EUROPRO 400 T	3 x 230-400 V	IE2	3,83	4	3	12,5	6,9	-	1450

MODEL	A	B	C	D	E	F	G	H	I	J	K	DNA	DNM	PACKING DIMENSIONS			WEIGHT kg
														L	B	H	
EUROPRO 400 T	428	405	574	310	267	500	335	300	450	600	370	100	100	840	385	595	44,5

EUROPRO HIGH FLOW 550

CENTRIFUGAL ELECTRIC PUMPS FOR FILTERING SYSTEMS IN PRIVATE AND PUBLIC SWIMMING POOLS AND FOR INDUSTRIAL APPLICATIONS

Pumped liquid temperature range: up to 40 °C - **Maximum ambient temperature:** +40 °C

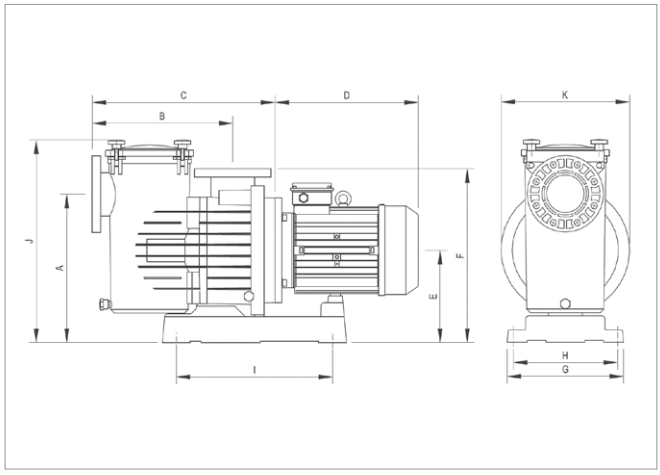

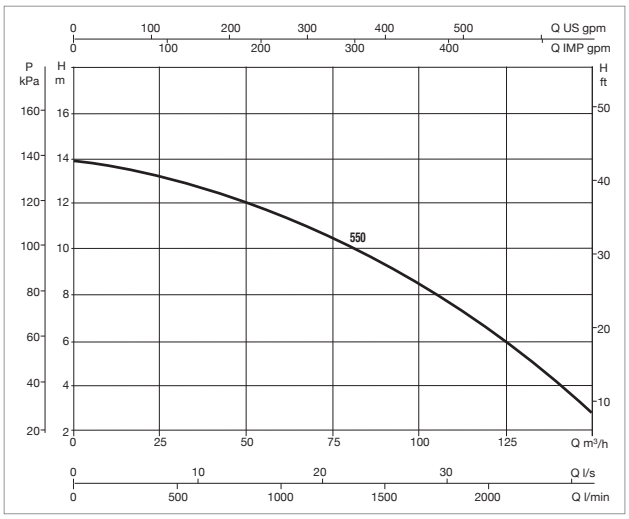

The performance curves are based on kinematic viscosity values = 1 mm²/s and density equal to 1000 kg/m³. Curve tolerance according to ISO 9906.

MODEL	H=m	6	8	10	12	14	16	18	20	22
EUROPRO 550 T	Q (m³/h)	122	104	84	52					

MODEL	POWER INPUT 50 Hz	MOTOR TYPE	P1 MAX kW	P2 NOMINAL		In A			No. rpm
				HP	kW	230	400	690	
EUROPRO 550 T	3 x 230-400 V	IE2	5,54	5,5	4	15,3	8,8	-	1450

Available with bronze impeller

MODEL	A	B	C	D	E	F	G	H	I	J	K	DNA	DNM	PACKING DIMENSIONS			WEIGHT kg
														L	B	H	
EUROPRO 550 T	428	405	574	335	267	500	335	300	450	600	370	100	100	1170	385	715	53,5

EUROPRO HIGH FLOW 750

CENTRIFUGAL ELECTRIC PUMPS FOR FILTERING SYSTEMS IN PRIVATE AND PUBLIC SWIMMING POOLS AND FOR INDUSTRIAL APPLICATIONS

Pumped liquid temperature range: up to 40 °C - **Maximum ambient temperature:** +40 °C

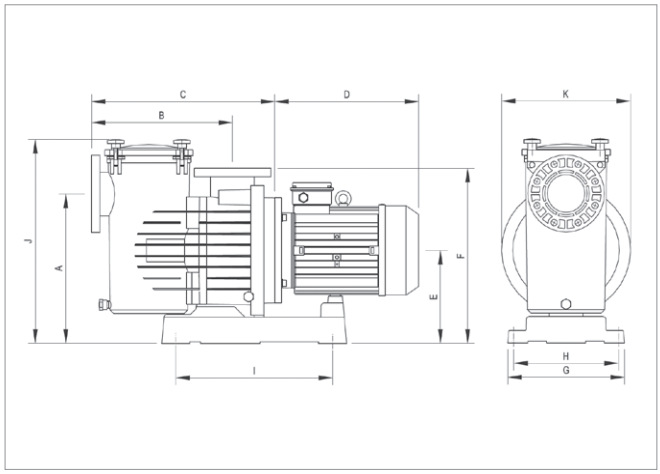

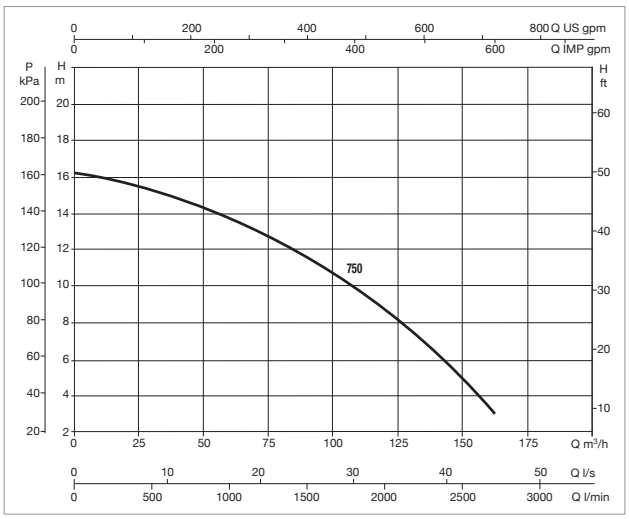

The performance curves are based on kinematic viscosity values = 1 mm²/s and density equal to 1000 kg/m³. Curve tolerance according to ISO 9906.

MODEL	H=m	6	8	10	12	14	16	18	20	22
EUROPRO 750 T	Q (m³/h)	144	126	106	84	56				

MODEL	POWER INPUT 50 Hz	MOTOR TYPE	P1 MAX kW	P2 NOMINAL		In A			No. rpm
				HP	kW	230	400	690	
EUROPRO 750 T	3 x 400-690 V	IE2	6,85	7,5	5,5	-	12	7	1450

Available with bronze impeller

MODEL	A	B	C	D	E	F	G	H	I	J	K	DNA	DNM	PACKING DIMENSIONS			WEIGHT kg
														L	B	H	
EUROPRO 750 T	428	405	574	380	267	500	335	300	450	600	370	100	100	1170	385	715	66

EUROPRO HIGH FLOW 1000

CENTRIFUGAL ELECTRIC PUMPS FOR FILTERING SYSTEMS IN PRIVATE AND PUBLIC SWIMMING POOLS AND FOR INDUSTRIAL APPLICATIONS

Pumped liquid temperature range: up to 40 °C - **Maximum ambient temperature:** +40 °C

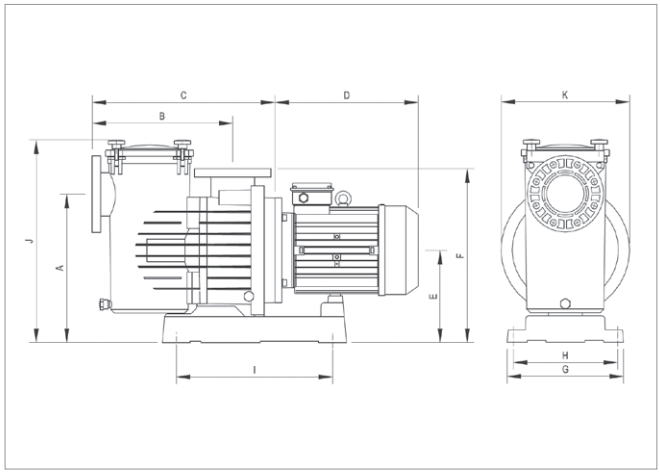

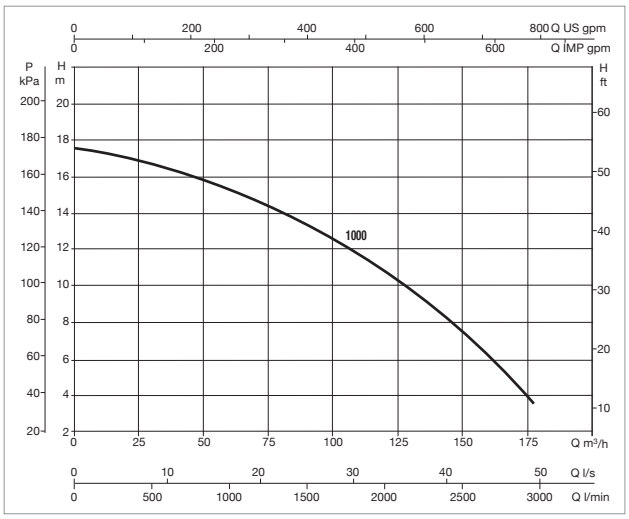

The performance curves are based on kinematic viscosity values = 1 mm²/s and density equal to 1000 kg/m³. Curve tolerance according to ISO 9906.

MODEL	H=m	6	8	10	12	14	16	18	20	22
EUROPRO 1000 T	Q (m³/h)	160	144	126	107	84	48			

MODEL	POWER INPUT 50 Hz	MOTOR TYPE	P1 MAX kW	P2 NOMINAL		In A			No. rpm
				HP	kW	230	400	690	
EUROPRO 1000 T	3 x 400-690 V	IE3	8,26	10	7,5	-	16,2	9,6	1450

Available with bronze impeller

MODEL	A	B	C	D	E	F	G	H	I	J	K	DNA	DNM	PACKING DIMENSIONS			WEIGHT kg
														L	B	H	
EUROPRO 1000 T	428	405	574	380	267	500	335	300	450	600	370	100	100	1170	385	715	76

EUROPRO HIGH FLOW 1250

CENTRIFUGAL ELECTRIC PUMPS FOR FILTERING SYSTEMS IN PRIVATE AND PUBLIC SWIMMING POOLS AND FOR INDUSTRIAL APPLICATIONS

Pumped liquid temperature range: up to 40 °C - **Maximum ambient temperature:** +40 °C

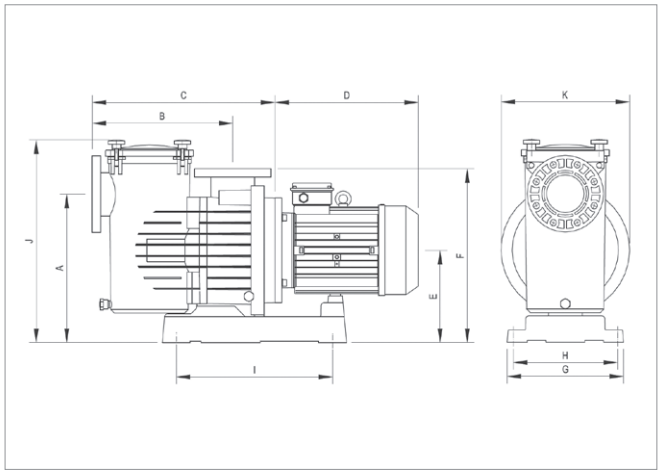

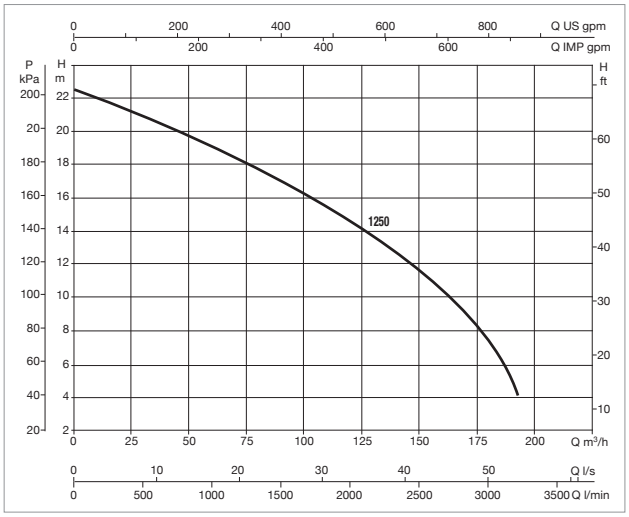

The performance curves are based on kinematic viscosity values = 1 mm²/s and density equal to 1000 kg/m³. Curve tolerance according to ISO 9906.

MODEL	H=m	6	8	10	12	14	16	18	20	22
EUROPRO 1250 T	Q (m³/h)		176	160	144	125	105	80	50	

MODEL	POWER INPUT 50 Hz	MOTOR TYPE	P1 MAX kW	P2 NOMINAL		In A			No. rpm
				HP	kW	230	400	690	
EUROPRO 1250 T	3 x 400-690 V	IE3	13,74	12,5	9,2	-	17,9	10,1	2850

Bronze impeller as standard.

MODEL	A	B	C	D	E	F	G	H	I	J	K	DNA	DNM	PACKING DIMENSIONS			WEIGHT kg
														L	B	H	
EUROPRO 1250 T	428	405	574	380	267	500	335	300	450	600	370	100	100	1170	385	715	84,5

DAB PUMPS reserves the right to make modifications without notice.

EUROPRO HIGH FLOW 1500

CENTRIFUGAL ELECTRIC PUMPS FOR FILTERING SYSTEMS IN PRIVATE AND PUBLIC SWIMMING POOLS AND FOR INDUSTRIAL APPLICATIONS

Pumped liquid temperature range: up to 40 °C - **Maximum ambient temperature:** +40 °C

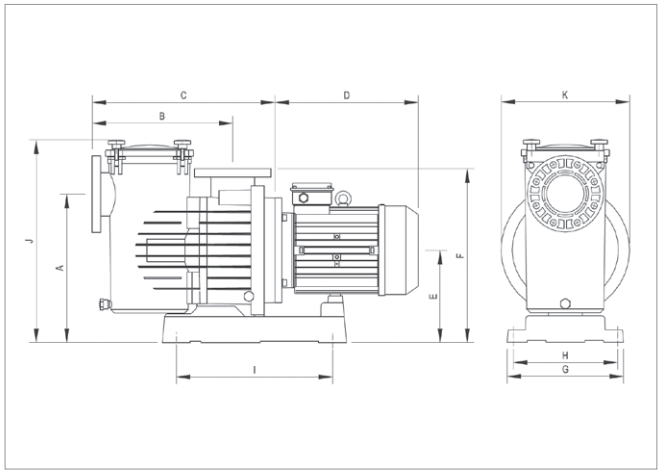

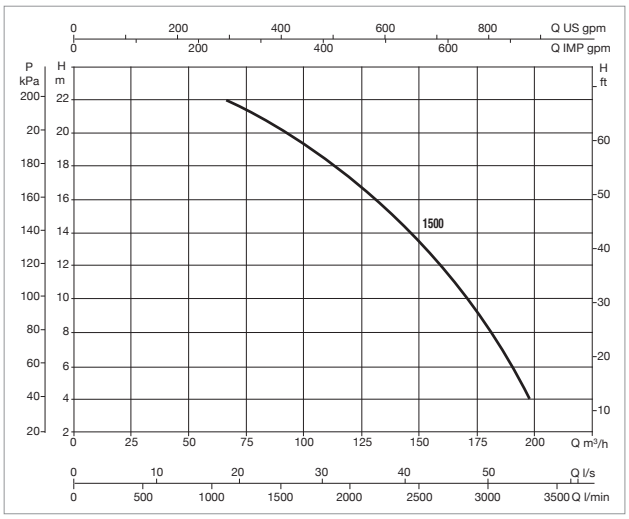

The performance curves are based on kinematic viscosity values = 1 mm^2/s and density equal to 1000 kg/m^3. Curve tolerance according to ISO 9906.

MODEL	H=m	6	8	10	12	14	16	18	20	22
EUROPRO 1500 T	Q (m^3/h)		180	168	155	142	130	115	96	67

MODEL	POWER INPUT 50 Hz	MOTOR TYPE	P1 MAX kW	P2 NOMINAL		In A			No. rpm
				HP	kW	230	400	690	
EUROPRO 1500 T	3 x 400-690 V	IE3	15,73	15	11	-	19,9	11	2850

Bronze impeller as standard.

MODEL	A	B	C	D	E	F	G	H	I	J	K	DNA	DNM	PACKING DIMENSIONS			WEIGHT kg
														L	B	H	
EUROPRO 1500 T	428	405	574	380	267	500	335	300	450	600	370	100	100	1170	385	715	85,5

CAST-IRON PREFILTERS

New range of DIN 2501 compliant cast-iron prefilters with connections from DN 65 to DN 200. They have 3 or 4 closing knobs, depending on the model, to ensure perfect plug seal. Cast iron prefilter vase and plug, AISI 316 stainless steel canister.

The new range of prefilters gives the possibility of using the standardised monobloc centrifugal pumps of the NKM-G/NKP-G ranges, starting from DN 40 up to DN 150, for the circulation of water in large filtration systems. The same filters may also be combined with MCE inverter or with base coupling (KDN) standardised pumps.

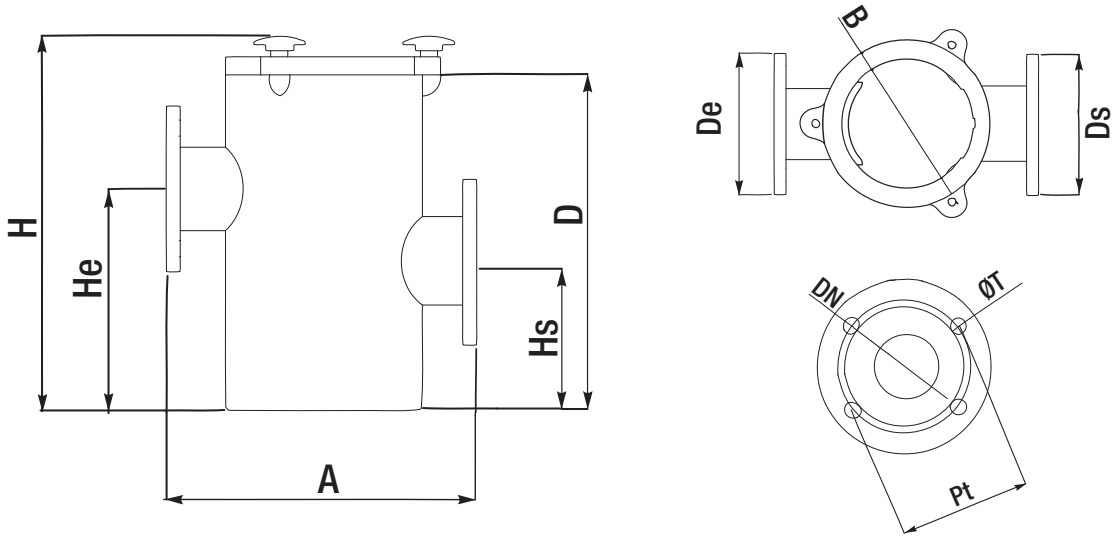

TYPE	DN	Pt	A	B	H	D	De	He	Ds	Hs	øT	No. T	kg	Volume, l
PREFILTER 65/65	65	145	380	260	415	360	185	250	185	120	18	4	38,5	18
PREFILTER 80/80	80	160	380	260	415	360	200	250	200	120	18	4-8	39	18
PREFILTER 100/100	100	180	380	260	415	360	200	270	220	155	18	8	40,5	18
PREFILTER 125/125	125	210	380	260	415	360	250	270	250	155	18	8	41	18
PREFILTER 150/150	150	240	460	340	555	500	285	380	285	190	22	8	71	42
PREFILTER 200/200	200	295	460	340	555	500	340	380	340	190	22	8	72	42

NOTE: PUMP AND PREFILTER ARE SOLD SEPARATELY
For further information contact our sales network.

DAB PUMPS reserves the right to make modifications without notice.

NKM-G / NKP-G

SWIMMING POOL STANDARDISED MONOBLOC CENTRIFUGAL ELECTRIC PUMPS

TECHNICAL DATA

Rotation speed: 1450-2900 1/min.
Operating range:
from 1 to 440 m^3/h with head up to 24 metres.
Pumped liquid: clean water, slightly dirty water, or slightly aggressive water, provided that the compatibility of the pump materials is ascertained, as well as that the power of the motor installed is compatible with the specific weight and the viscosity of the pumped liquid.
Pumped liquid temperature range: from -10 °C to +140 °C.
Maximum ambient temperature: +40 °C.
Installation: in the horizontal position.
Top VERSION: Bronze impeller and cataphoresis paint coating.

APPLICATIONS

Monobloc centrifugal electric pumps with coupling with a suction prefilter, for the circulation of water in large filtration systems. **Pump and prefilter are sold separately.**

CONSTRUCTION FEATURES OF THE PUMP:

Cast iron single stage spiral body complying with DIN-EN 733 (formerly DIN 24255), cast iron support, flanges complying with DIN 2533. Cast iron impeller, closed and dynamically balanced, with compensation of the axial thrust through balancing holes. AISI 304 stainless steel pump shaft, **carbon/silicon carbide mechanical seal, Viton Or rings.** Closed asynchronous type motor with external ventilation, B3/B5 construction, two poles for NKP and four poles for NKM.

PREFILTER CONSTRUCTION CHARACTERISTICS

Cast iron prefilter vase and plug, AISI 316 stainless steel canister.

MATERIALS

N.	PARTS*	MATERIALS (BASIC version)
1	PUMP BODY	CAST IRON 250 UNI ISO 185
3	SUPPORT	CAST IRON 250 UNI ISO 185
4	IMPELLER	CAST IRON 250 UNI ISO 185
7A	PUMP SHAFT	AISI 304 STAINLESS STEEL UNI 6900/71
16	MECHANICAL SEAL	CARBON/SILICON CARBIDE/VITON
28	OR RING	EDPM
31	SEAL SPACER	AISI 304 STAINLESS STEEL - UNI 6900/71
36	SEAL HOLDING DISC	CAST IRON 250 UNI ISO 185
37	BLEED COCK	AISI 304 STAINLESS STEEL - UNI 6900/71

N.	PARTS*	MATERIALS (TOP version)
1	PUMP BODY	CATAPHORESIS PAINT COATING
4	IMPELLER	BRONZE GCuSn5Zn5Pb5 UNI 7013/8a-72

* In contact with the liquid

VERSION WITH MOTOR UP TO 7,5 KW INCLUDED

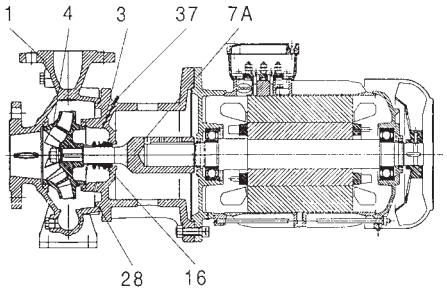

VERSION WITH MOTOR OVER 7,5 KW

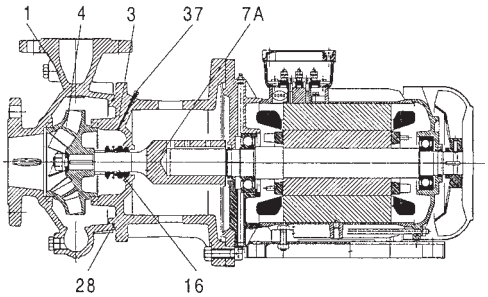

VERSION FOR MODELS:
NKM-G 80-200/200/ 4/4, NKM-G 80-250/270/11/4, NKM-G100-250/250/11/4, NKM-G150-200/218/11/4

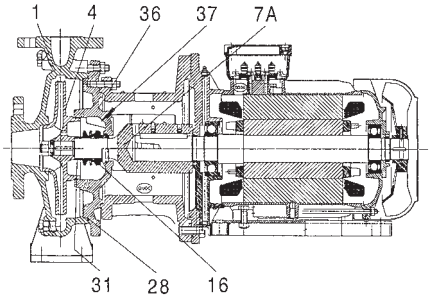

NKM-G / NKP-G

SWIMMING POOL STANDARDISED MONOBLOC CENTRIFUGAL ELECTRIC PUMPS

Legend:

NKM - G 100 - 200 / 200/ A W / BAQV / 5,5 /4

NKM = 4 poles
NKP = 2 poles

G = with coupling

Nominal diameter of the delivery port:

Nominal diameter of the impeller:

Actual diameter of the impeller:

Material codes:
A = Cast iron
B = Cast iron with bronze impeller

Wear rings (only if present)

Seal description

Motor power in kW

Number of poles
4 = 4 poles
2 = 2 poles

DESCRIPTION OF THE MECHANICAL SEAL

POSITION	CODE	DESCRIPTION OF THE SEAL
1	A	O-RING SEAL WITH FIXED GUIDE
	B	RUBBER BELLOWS SEAL
	C	O-RING SEAL WITH SPRING GUIDE
	D	O-RING SEAL BALANCED
	M	RUBBER BELLOWS SEAL
	X	METAL BELLOWS SEAL
POSITION	**CODE**	**MATERIALS**
2 & 3	A	IMPREGNATED CARBON/METAL
	B	IMPREGNATED CARBON/RESIN
	C	OTHER CARBON TYPES
	S	CHROMIUM STEEL
	U	TUNGSTEN CARBIDE
	Q	SILICON CARBIDE
	V	ALUMINIUM OXIDE (CERAMIC)
	X	OTHER CERAMIC TYPES
POSITION	**CODE**	**MATERIALS**
4	P	NITRILE RUBBER (NBR)
	S	SILICON RUBBER
	T	TEFLON (PTFE)
	E	EPDM
	V	VITON
	M	PTFE COATED O-RING
POSITION	**CODE**	**MATERIALS**
5	V	REINFORCED

DAB PUMPS reserves the right to make modifications without notice.

NKM-G 40-200 - SWIMMING POOL STANDARDISED MONOBLOC CENTRIFUGAL ELECTRIC PUMPS

Pumped liquid temperature range: from -10 °C to +140 °C - Maximum ambient temperature: +40 °C

≅ 1450 1/min

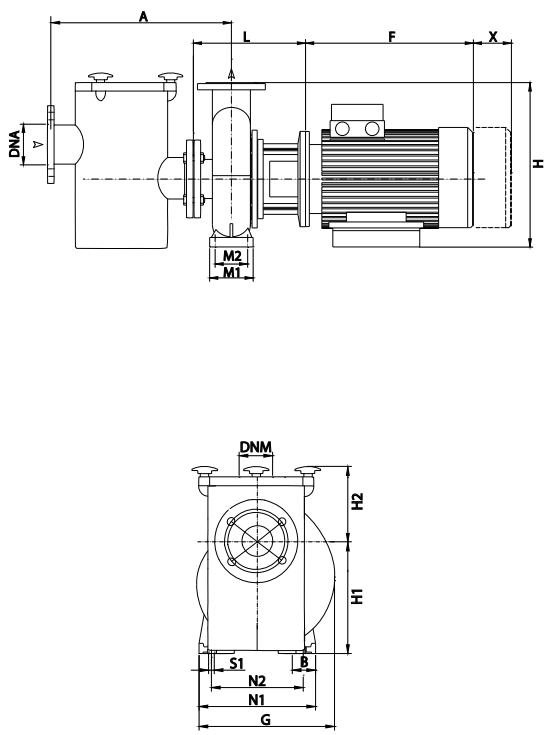

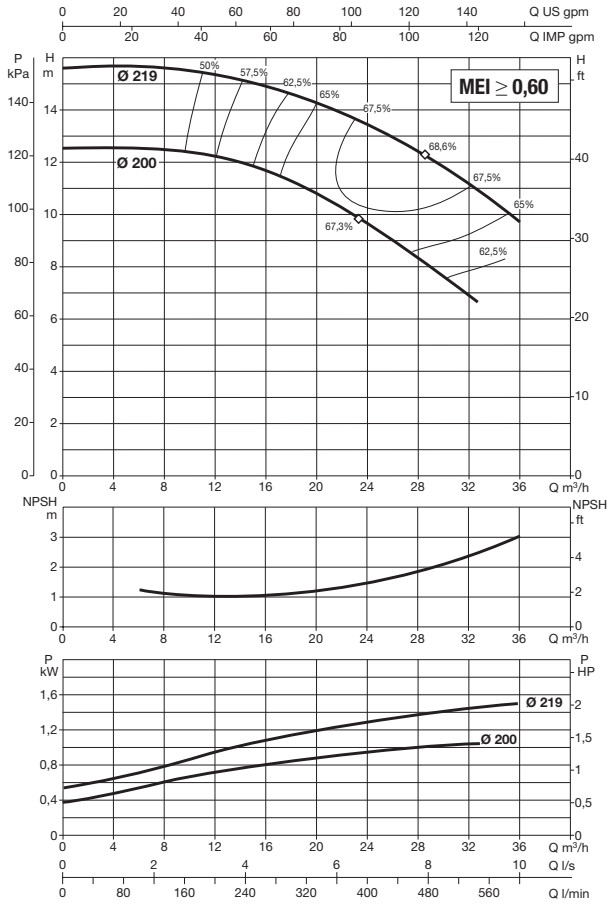

PUMP AND PREFILTER ARE SOLD SEPARATELY
For further information contact our sales network.

The performance curves are based on kinematic viscosity values = 1 mm²/s and density equal to 1000 kg/m³. Curve tolerance according to ISO 9906.

MODEL	Q=m³/h	0	6	12	18	24	30	36
	Q=l/min	0	100	200	300	400	500	600
NKM-G 40-200/200/ 1,1 /4	H (m)	12.5	12.5	12.3	11.2	9.7	7.7	
NKM-G 40-200/219/ 1,5 /4		15.6	15.6	15.3	14.7	13.4	11.8	9.8

MODEL	ELECTRICAL DATA						
	MOTOR SIZE	POWER INPUT 50 Hz	P2 NOMINAL		In A		MOTOR TYPE
			kW	HP	IE2	IE3	
NKM-G 40-200/200/ 1,1 /4	MEC 90 S	230/400 V	1.1	1.5	4.68/2.7	–	IE2
NKM-G 40-200/219/ 1,5 /4	MEC 90 L	230/400 V	1.5	2	6.24/3.6	–	IE2

MODEL	A	B	F		G	H1	H2	L	M1	M2	N1	N2	S1	X	Ø (mm) Mech. seal	DNA	DNM	PACKING DIMENSIONS			VOLUME (m³)	WEIGHT kg	
			IE2	IE3														L/A	L/B	H		IE2	IE3
NKM-G 40-200/200/ 1,1 /4	100	50	247	–	296	160	180	246	100	70	265	212	M10	100	28	65	40	620	370	480	0,110	64	–
NKM-G 40-200/219/ 1,5 /4	100	50	272	–	296	160	180	246	100	70	265	212	M10	100	28	65	40	620	370	480	0,110	66	–

NKM-G 40-250 - SWIMMING POOL STANDARDISED MONOBLOC CENTRIFUGAL ELECTRIC PUMPS

Pumped liquid temperature range: from -10 °C to +140 °C - Maximum ambient temperature: +40 °C

≅ 1450 1/min

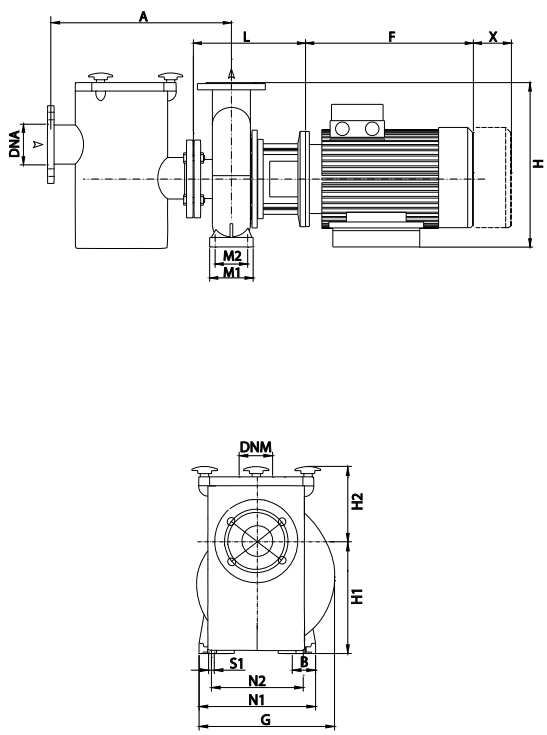

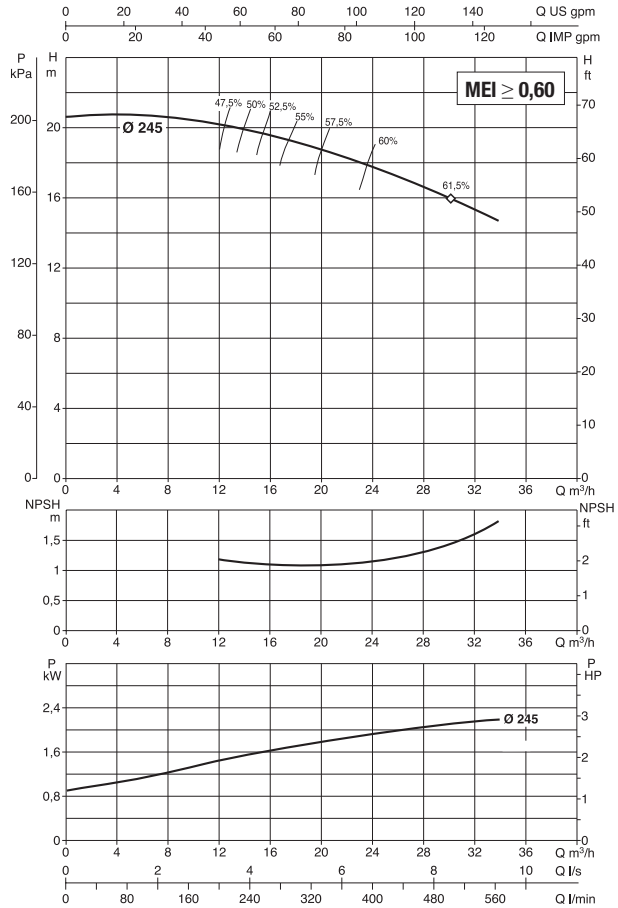

PUMP AND PREFILTER ARE SOLD SEPARATELY
For further information contact our sales network.

The performance curves are based on kinematic viscosity values = 1 mm²/s and density equal to 1000 kg/m³. Curve tolerance according to ISO 9906.

MODEL	Q=m³/h	0	6	12	18	24	30
	Q=l/min	0	100	200	300	400	500
NKM-G 40-250/245/ 2,2 /4	H (m)	20.6	20.5	20.1	19.2	17.8	16

MODEL	ELECTRICAL DATA						
	MOTOR SIZE	POWER INPUT 50 Hz	P2 NOMINAL		In A		MOTOR TYPE
			kW	HP	IE2	IE3	
NKM-G 40-250/245/ 2,2 /4	MEC 100 L	230/400 V	2.2	3	8.75/5.05	–	IE2

MODEL	A	B	F		G	H1	H2	L	M1	M2	N1	N2	S1	X	Ø (mm) Mech. seal	DNA	DNM	PACKING DIMENSIONS			VOLUME (m³)	WEIGHT kg	
			IE2	IE3														L/A	L/B	H		IE2	IE3
NKM-G 40-250/245/ 2,2 /4	100	65	301	–	336	180	225	274	125	95	320	250	M10	100	28	65	40	670	420	540	0,152	85	–

NKM-G 50-160 - SWIMMING POOL STANDARDISED MONOBLOC CENTRIFUGAL ELECTRIC PUMPS

Pumped liquid temperature range: from -10 °C to +140 °C - Maximum ambient temperature: +40 °C

≅ 1450 1/min

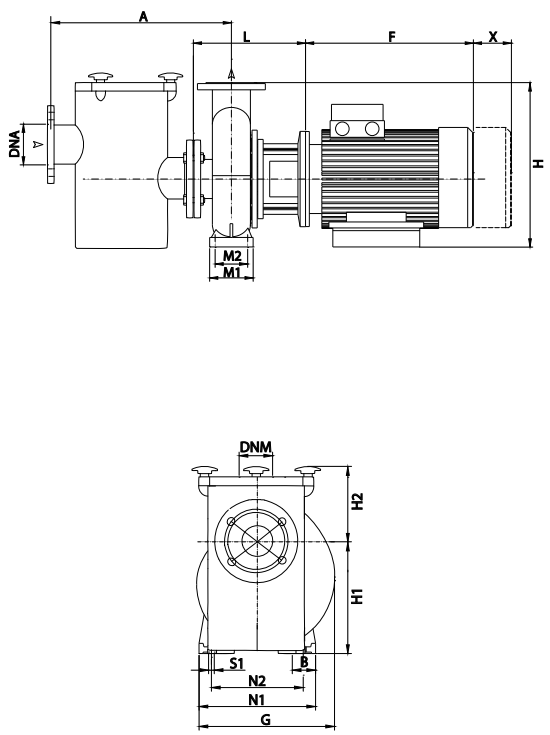

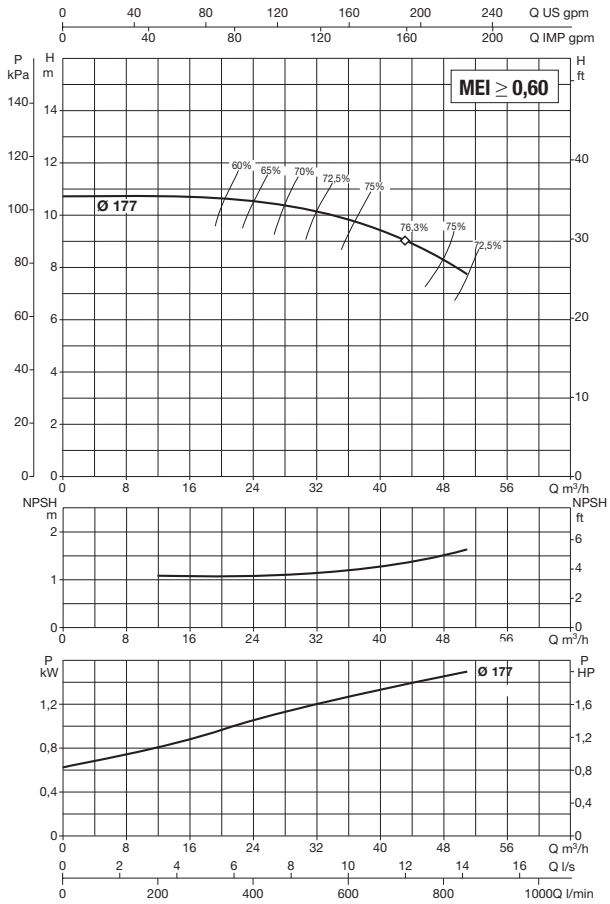

PUMP AND PREFILTER ARE SOLD SEPARATELY
For further information contact our sales network.

The performance curves are based on kinematic viscosity values = 1 mm²/s and density equal to 1000 kg/m³. Curve tolerance according to ISO 9906.

MODEL	Q=m³/h	0	12	18	24	30	36	42	48
	Q=l/min	0	200	300	400	500	600	700	800
NKM-G 50-160/177/ 1,5 /4	H (m)	10.7	10.7	10.7	10.5	10.2	9.8	9.2	8.3

MODEL	ELECTRICAL DATA						
	MOTOR SIZE	POWER INPUT 50 Hz	P2 NOMINAL		In A		MOTOR TYPE
			kW	HP	IE2	IE3	
NKM-G 50-160/177/ 1,5 /4	MEC 90 L	230/400 V	1.5	2	6.24/3.6	–	IE2

MODEL	A	B	F		G	H1	H2	L	M1	M2	N1	N2	S1	X	Ø (mm) Mech. seal	DNA	DNM	PACKING DIMENSIONS			VOLUME (m³)	WEIGHT kg	
			IE2	IE3														L/A	L/B	H		IE2	IE3
NKM-G 50-160/177/ 1,5 /4	100	50	272	–	282	160	180	274	100	70	265	212	M10	100	28	65	50	620	370	480	0,110	60	–

DAB PUMPS reserves the right to make modifications without notice.

NKM-G 50-200 - SWIMMING POOL STANDARDISED MONOBLOC CENTRIFUGAL ELECTRIC PUMPS

Pumped liquid temperature range: from -10 °C to +140 °C - **Maximum ambient temperature:** +40 °C

≅ 1450 1/min

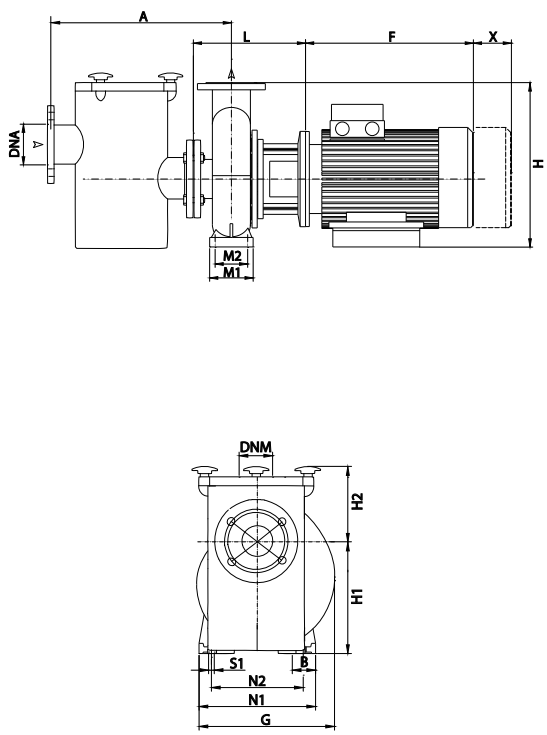

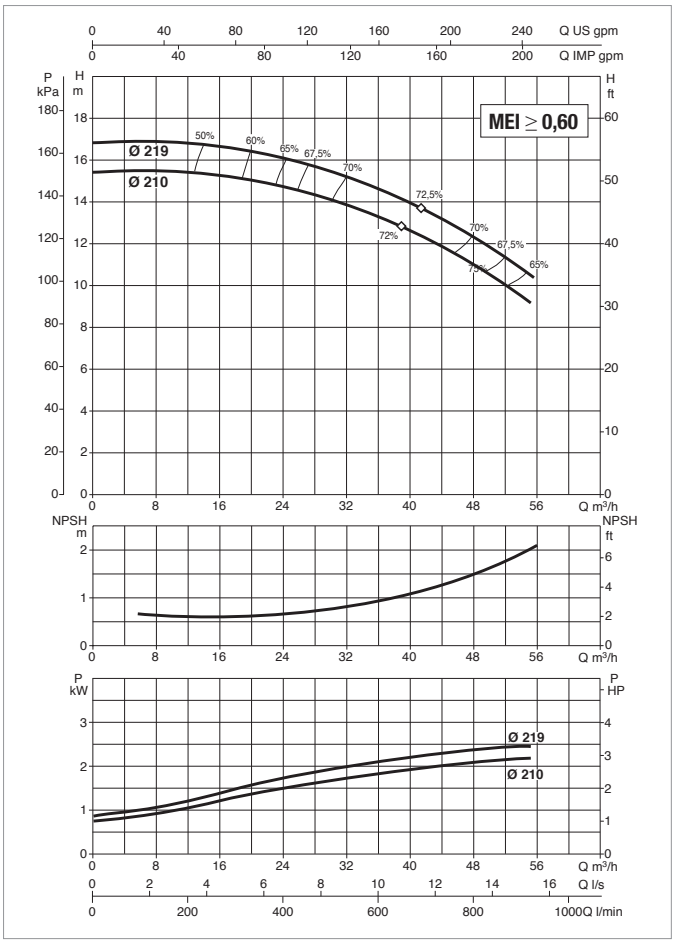

PUMP AND PREFILTER ARE SOLD SEPARATELY
For further information contact our sales network.

The performance curves are based on kinematic viscosity values = 1 mm²/s and density equal to 1000 kg/m³. Curve tolerance according to ISO 9906.

MODEL	Q=m³/h	0	12	18	24	30	36	42	48	54
	Q=l/min	0	200	300	400	500	600	700	800	900
NKM-G 50-200/210	H (m)	15.3	15.3	15.2	14.8	14	13.3	12.1	10.8	9.4
NKM-G 50-200/219		16.8	16.8	16.5	16.1	15.5	14.6	13.6	12.4	10.9

MODEL	ELECTRICAL DATA						
	MOTOR SIZE	POWER INPUT 50 Hz	P2 NOMINAL		In A		MOTOR TYPE
			kW	HP	IE2	IE3	
NKM-G 50-200/210/ 2,2 /4	MEC 100 L	230/400 V	2.2	3	8.75/5.05	–	IE2
NKM-G 50-200/219/ 3 /4	MEC 100 L	400 V Δ	3	4	6,25	–	IE2

MODEL	A	B	F		G	H1	H2	L	M1	M2	N1	N2	S1	X	Ø (mm) Mech. seal	DNA	DNM	PACKING DIMENSIONS			VOLUME (m³)	WEIGHT kg	
			IE2	IE3														L/A	L/B	H		IE2	IE3
NKM-G 50-200/210/ 2,2 /4	100	50	301	–	302	160	200	274	100	70	265	212	M10	100	28	65	50	670	420	540	0,152	79	–
NKM-G 50-200/219/ 3 /4	100	50	301	–	302	160	200	274	100	70	265	212	M10	100	28	65	50	670	420	540	0,152	81	–

NKM-G 50-250 - SWIMMING POOL STANDARDISED MONOBLOC CENTRIFUGAL ELECTRIC PUMPS

Pumped liquid temperature range: from -10 °C to +140 °C - **Maximum ambient temperature:** +40 °C

≅ 1450 1/min

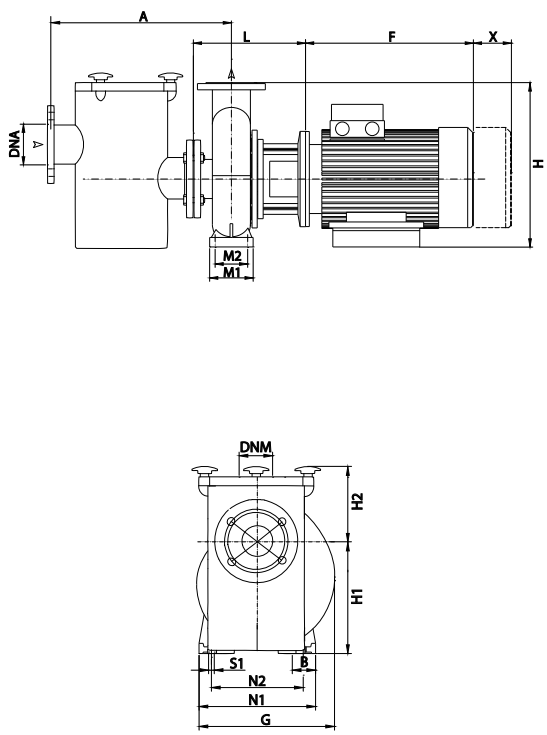

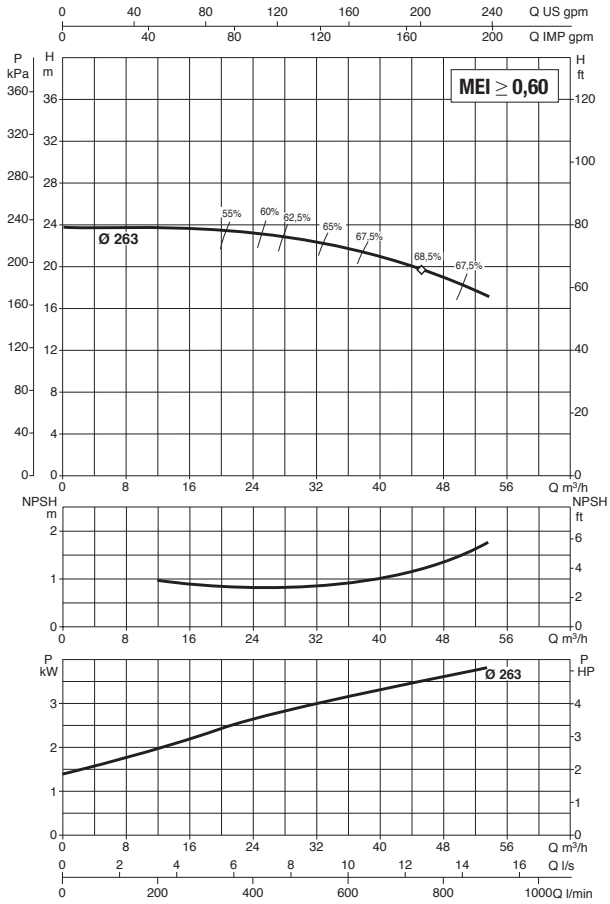

PUMP AND PREFILTER ARE SOLD SEPARATELY
For further information contact our sales network.

The performance curves are based on kinematic viscosity values = 1 mm²/s and density equal to 1000 kg/m³. Curve tolerance according to ISO 9906.

MODEL	Q=m³/h	0	12	18	24	30	36	42	48	54
	Q=l/min	0	200	300	400	500	600	700	800	900
NKM-G 50-250/263/ 4 /4	H (m)	23.8	23.8	23.8	23.4	22.7	21.6	20.4	19	17.1

MODEL	ELECTRICAL DATA						
	MOTOR SIZE	POWER INPUT 50 Hz	P2 NOMINAL		In A		MOTOR TYPE
			kW	HP	IE2	IE3	
NKM-G 50-250/263/ 4 /4	MEC 112 M	400 V Δ	4	5.5	7,95	–	IE2

MODEL	A	B	F		G	H1	H2	L	M1	M2	N1	N2	S1	X	Ø (mm) Mech. seal	DNA	DNM	PACKING DIMENSIONS			VOLUME (m³)	WEIGHT kg	
			IE2	IE3														L/A	L/B	H		IE2	IE3
NKM-G 50-250/263/ 4 /4	100	65	301	–	343	180	225	274	125	95	320	250	M10	100	28	65	50	670	420	540	0,152	98	–

NKM-G 65-200 - SWIMMING POOL STANDARDISED MONOBLOC CENTRIFUGAL ELECTRIC PUMPS

Pumped liquid temperature range: from -10 °C to +140 °C - Maximum ambient temperature: +40 °C

≅ 1450 1/min

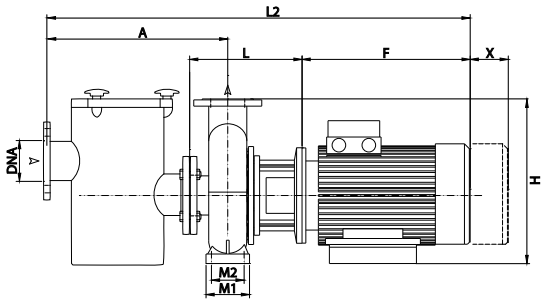

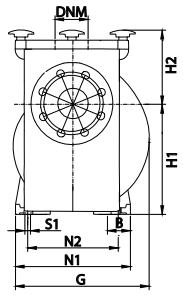

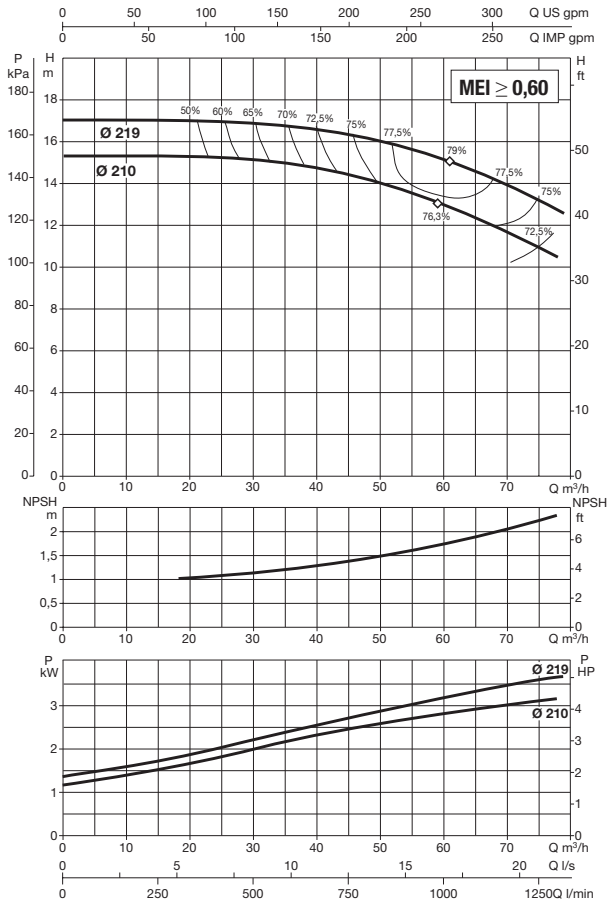

PUMP AND PREFILTER ARE SOLD SEPARATELY
For further information contact our sales network.

The performance curves are based on kinematic viscosity values = 1 mm²/s and density equal to 1000 kg/m³. Curve tolerance according to ISO 9906.

MODEL	Q=m³/h	0	24	30	36	42	48	54	60	66	72	78
	Q=l/min	0	400	500	600	700	800	900	1000	1100	1200	1300
NKM-G 65-200/210/ 3 /4	H (m)	15.3	15.2	15.2	15.1	14.6	14.1	13.5	12.9	12.2	11.3	
NKM-G 65-200/219/ 4 /4		17	17	16.9	16.8	16.4	16.2	15.8	15.2	14.3	13.8	12.6

MODEL	ELECTRICAL DATA						
	MOTOR SIZE	POWER INPUT 50 Hz	P2 NOMINAL		In A		MOTOR TYPE
			kW	HP	IE2	IE3	
NKM-G 65-200/210/ 3 /4	MEC 100 L	400 V Δ	3	4	6,25	–	IE2
NKM-G 65-200/219/ 4 /4	MEC 112 M	400 V Δ	4	5.5	7,95	–	IE2

MODEL	A	B	F		G	H1	H2	L	M1	M2	N1	N2	S1	X	Ø (mm) Mech. seal	DNA	DNM	PACKING DIMENSIONS			VOLUME (m³)	WEIGHT kg	
			IE2	IE3														L/A	L/B	H		IE2	IE3
NKM-G 65-200/210/ 3 /4	100	65	301	–	333	180	225	274	125	95	320	250	M10	140	28	80	65	670	420	540	0,152	88	–
NKM-G 65-200/219/ 4 /4	100	65	301	–	333	180	225	274	125	95	320	250	M10	140	28	80	65	670	420	540	0,152	96	–

DAB PUMPS reserves the right to make modifications without notice.

NKM-G 65-250 - SWIMMING POOL STANDARDISED MONOBLOC CENTRIFUGAL ELECTRIC PUMPS

Pumped liquid temperature range: from -10 °C to +140 °C - **Maximum ambient temperature:** +40 °C

≅ 1450 1/min

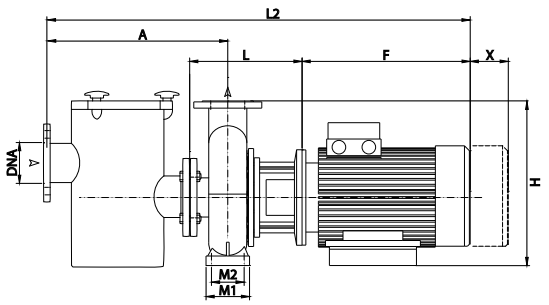

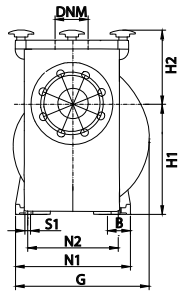

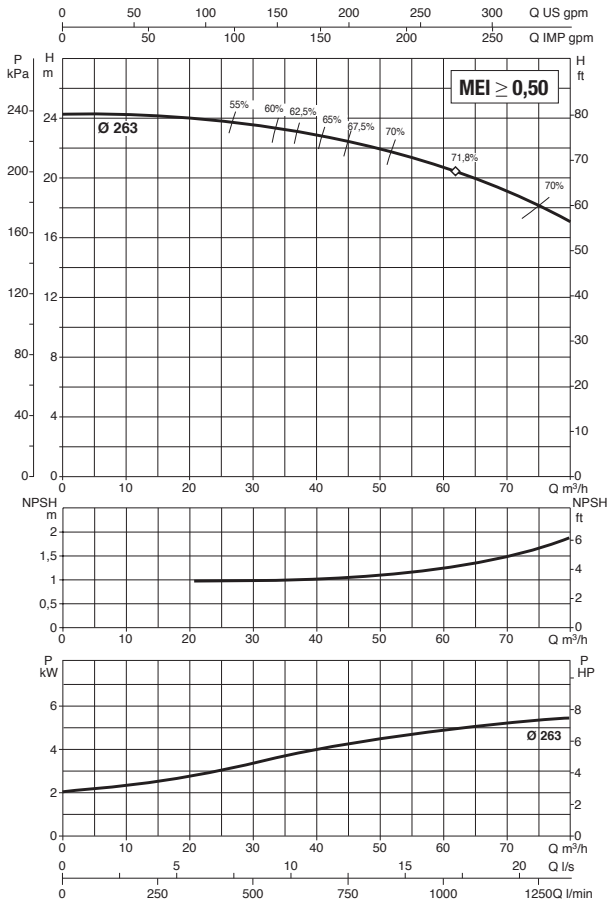

PUMP AND PREFILTER ARE SOLD SEPARATELY
For further information contact our sales network.

The performance curves are based on kinematic viscosity values = 1 mm²/s and density equal to 1000 kg/m³. Curve tolerance according to ISO 9906.

MODEL	Q=m³/h	0	24	30	36	42	48	54	60	66	72	78
	Q=l/min	0	400	500	600	700	800	900	1000	1100	1200	1300
NKM-G 65-250/263/ 5,5 /4	H (m)	24.1	23.8	23.6	23.3	22.8	22.3	21.5	20.8	19.7	18.6	17.3

MODEL	ELECTRICAL DATA						
	MOTOR SIZE	POWER INPUT 50 Hz	P2 NOMINAL		In A		MOTOR TYPE
			kW	HP	IE2	IE3	
NKM-G 65-250/263/ 5,5 /4	MEC132 S	400 V Δ	5.5	7.5	10,6	–	IE2

MODEL	A	B	F		G	H1	H2	L	M1	M2	N1	N2	S1	X	Ø (mm) Mech. seal	DNA	DNM	PACKING DIMENSIONS			VOLUME (m³)	WEIGHT kg	
			IE2	IE3														L/A	L/B	H		IE2	IE3
NKM-G 65-250/263/ 5,5 /4	100	80	390	–	370	200	250	343	160	120	360	280	M14	140	38	80	65	1030	530	640	0,349	159	–

DAB PUMPS reserves the right to make modifications without notice.

NKM-G 80-200 - SWIMMING POOL STANDARDISED MONOBLOC CENTRIFUGAL ELECTRIC PUMPS

Pumped liquid temperature range: from -10 °C to +140 °C - Maximum ambient temperature: +40 °C

≅ 1450 1/min

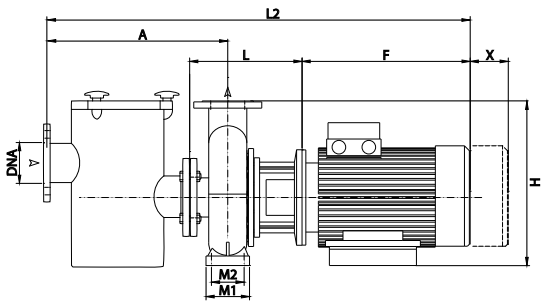

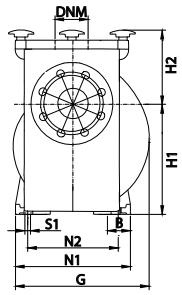

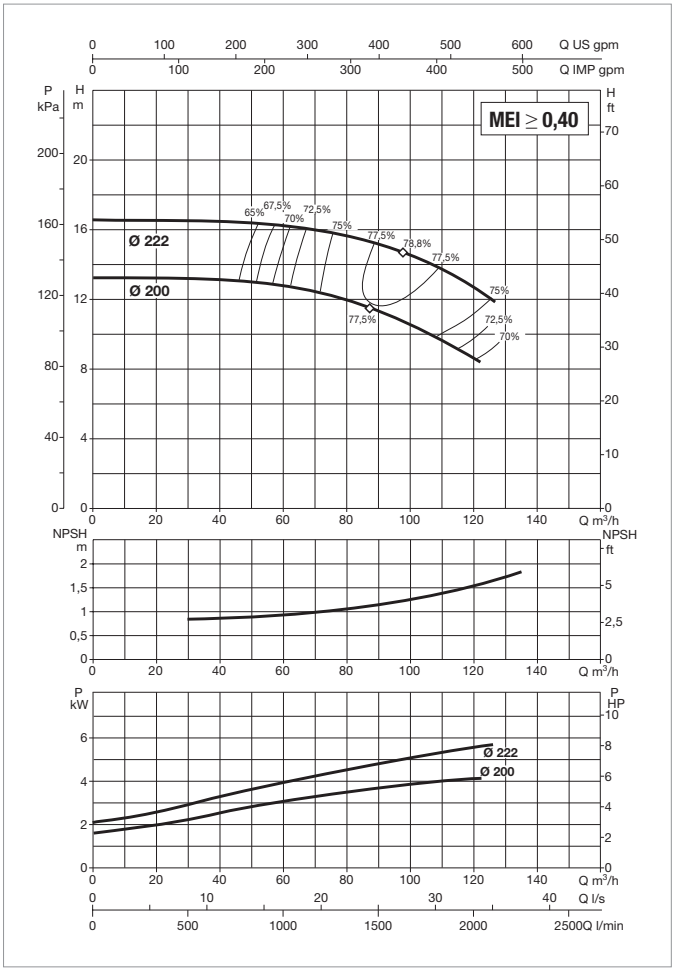

PUMP AND PREFILTER ARE SOLD SEPARATELY
For further information contact our sales network.

The performance curves are based on kinematic viscosity values = 1 mm²/s and density equal to 1000 kg/m³. Curve tolerance according to ISO 9906.

MODEL	Q=m³/h	0	42	48	54	60	66	72	78	84	90	102	114	120
	Q=l/min	0	700	800	900	1000	1100	1200	1300	1400	1500	1700	1900	2000
NKM-G 80-200/200/ 4 /4	H (m)	13.2	13.1	13	12.9	12.8	12.7	12.4	12	11.7	11.3	10.4	9.3	8.7
NKM-G 80-200/222/ 5,5 /4		16.6	16.5	16.5	16.4	16.2	16.1	16	15.7	15.4	15	14.3	13.3	12.7

MODEL	ELECTRICAL DATA						
	MOTOR SIZE	POWER INPUT 50 Hz	P2 NOMINAL		In A		MOTOR TYPE
			kW	HP	IE2	IE3	
NKM-G 80-200/200/ 4 /4	MEC 112 M	400 V Δ	4	5.5	7,95	–	IE2
NKM-G 80-200/222/ 5,5 /4	MEC 132 S	400 V Δ	5.5	7.5	10,6	–	IE2

MODEL	A	B	F		G	H1	H2	L	M1	M2	N1	N2	S1	X	Ø (mm) Mech. seal	DNA	DNM	PACKING DIMENSIONS			VOLUME (m³)	WEIGHT kg	
			IE2	IE3														L/A	L/B	H		IE2	IE3
NKM-G 80-200/200/ 4 /4	125	65	301	–	365	180	250	368	125	95	345	280	M10	140	38	100	80	1030	530	640	0,349	118	–
NKM-G 80-200/222/ 5,5 /4	125	65	390	–	365	180	250	368	125	95	345	280	M10	140	38	100	80	1030	530	640	0,349	147	–

DAB PUMPS reserves the right to make modifications without notice.

NKM-G 80-250 - SWIMMING POOL STANDARDISED MONOBLOC CENTRIFUGAL ELECTRIC PUMPS

Pumped liquid temperature range: from -10 °C to +140 °C - Maximum ambient temperature: +40 °C

≅ 1450 1/min

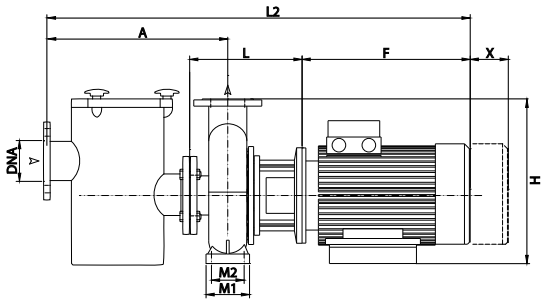

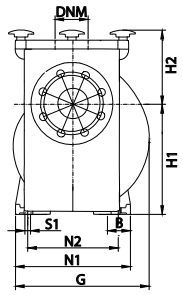

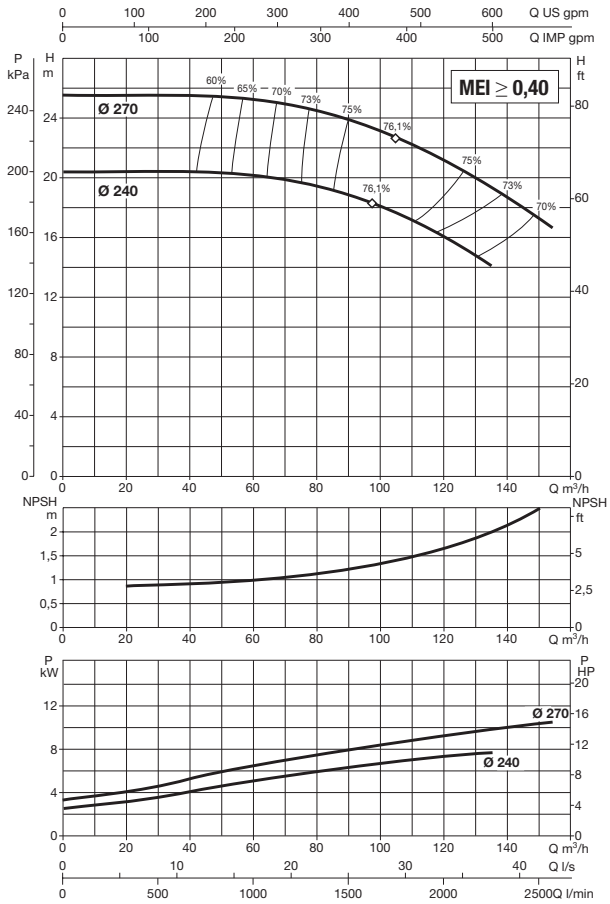

PUMP AND PREFILTER ARE SOLD SEPARATELY
For further information contact our sales network.

The performance curves are based on kinematic viscosity values = 1 mm²/s and density equal to 1000 kg/m³. Curve tolerance according to ISO 9906.

MODEL	Q=m³/h	0	42	48	54	60	66	72	78	84	90	102	114	120
	Q=l/min	0	700	800	900	1000	1100	1200	1300	1400	1500	1700	1900	2000
NKM-G 80-250/240/ 7,5 /4	H (m)	20.4	20.3	20.3	20.2	20.1	20	19.9	19.8	19.5	19	18	16.7	16
NKM-G 80-250/270/11 /4		25.6	25.5	25.5	25.4	25.1	25	24.8	24.6	24.2	24	23	21.5	21

MODEL	ELECTRICAL DATA						
	MOTOR SIZE	POWER INPUT 50 Hz	P2 NOMINAL		In A		MOTOR TYPE
			kW	HP	IE2	IE3	
NKM-G 80-250/240/ 7,5 /4	MEC 132 M	400 V Δ	7.5	10	–	14,6	IE3
NKM-G 80-250/270/11 /4	MEC 160 M	400 V Δ	11	15	–	20,5	IE3

MODEL	A	B	E	F		G	H1	H2	L	M1	M2	N1	N2	N3	S1	S2	W	X	H4	Ø (mm) Mech. seal	DNA	DNM	PACKING DIMENSIONS			VOL. (m³)	WEIGHT kg	
				IE2	IE3																		L/A	L/B	H		IE2	IE3
NKM-G 80-250/240/ 7,5 /4	125	80	–	–	437	410	200	280	368	160	120	400	315	–	M14	–	–	140	–	38	100	80	1030	530	640	0,349	–	153
NKM-G 80-250/270/11 /4	125	80	210	–	505	410	200	280	398	160	120	400	315	254	M14	M12	381	140	40	38	100	80	1030	530	640	0,349	–	205

NKM-G 100-200 - SWIMMING POOL STANDARDISED MONOBLOC CENTRIFUGAL ELECTRIC PUMPS

Pumped liquid temperature range: from -10 °C to +140 °C - Maximum ambient temperature: +40 °C

≅ 1450 1/min

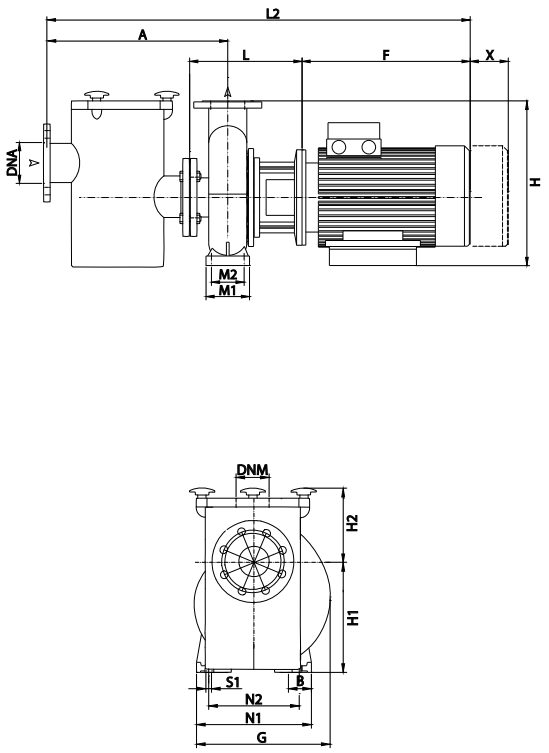

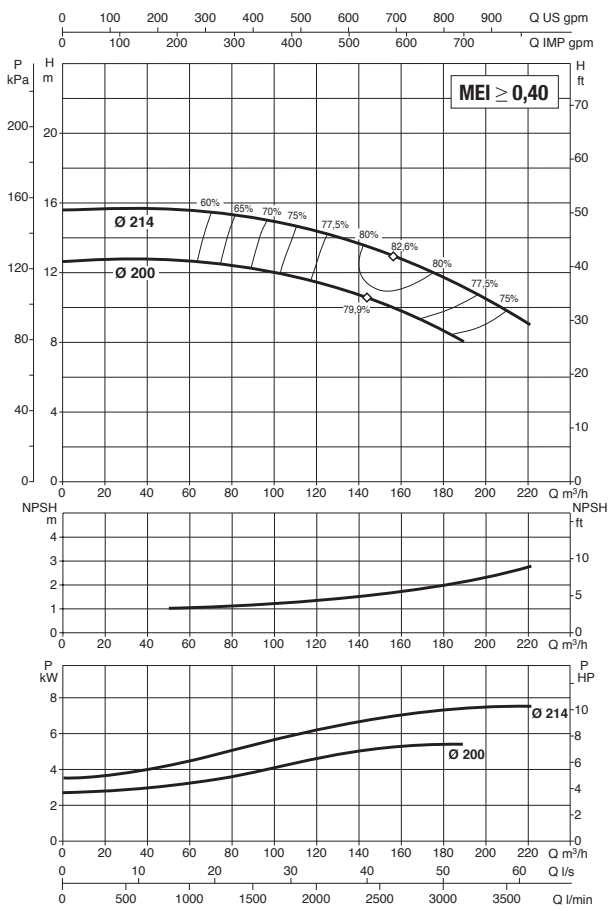

PUMP AND PREFILTER ARE SOLD SEPARATELY
For further information contact our sales network.

The performance curves are based on kinematic viscosity values = 1 mm²/s and density equal to 1000 kg/m³. Curve tolerance according to ISO 9906.

MODEL	Q=m³/h	0	60	66	72	78	84	90	102	114	120	150	180	210
	Q=l/min	0	1000	1100	1200	1300	1400	1500	1700	1900	2000	2500	3000	3500
NKM-G100-200/200/ 5.5 /4	H (m)	12.7	12.6	12.6	12.5	12.5	12.4	12.3	12	11.5	11.4	10.1	8.5	
NKM-G100-200/214/ 7.5 /4		15.6	15.4	15.4	15.3	15.2	15.1	15	14.7	14.5	14.3	13.3	11.6	9.8

MODEL	ELECTRICAL DATA						
	MOTOR SIZE	POWER INPUT 50 Hz	P2 NOMINAL		In A		MOTOR TYPE
			kW	HP	IE2	IE3	
NKM-G100-200/200/ 5.5 /4	MEC 132 S	400 V Δ	5.5	7.5	10,6	–	IE2
NKM-G100-200/214/ 7.5 /4	MEC 132 M	400 V Δ	7.5	10	–	14,6	IE3

MODEL	A	B	F		G	H1	H2	L	M1	M2	N1	N2	S1	X	Ø (mm) Mech. seal	DNA	DNM	PACKING DIMENSIONS			VOLUME (m³)	WEIGHT kg	
			IE2	IE3														L/A	L/B	H		IE2	IE3
NKM-G100-200/200/ 5.5 /4	125	80	390	–	392	200	280	368	160	120	360	280	M14	140	38	125	100	1030	530	640	0,349	160	–
NKM-G100-200/214/ 7.5 /4	125	80	–	437	392	200	280	368	160	120	360	280	M14	140	38	125	100	1030	530	640	0,349	–	149

NKM-G 100-250 - SWIMMING POOL STANDARDISED MONOBLOC CENTRIFUGAL ELECTRIC PUMPS

Pumped liquid temperature range: from -10 °C to +140 °C - Maximum ambient temperature: +40 °C

≅ 1450 1/min

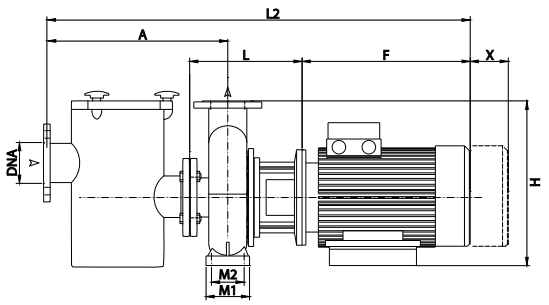

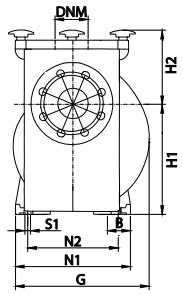

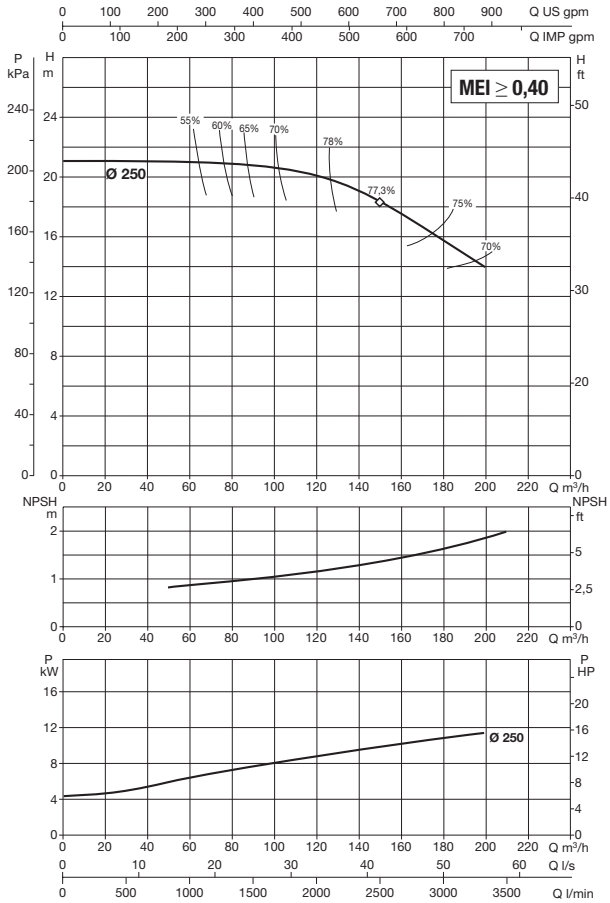

PUMP AND PREFILTER ARE SOLD SEPARATELY
For further information contact our sales network.

The performance curves are based on kinematic viscosity values = 1 mm²/s and density equal to 1000 kg/m³. Curve tolerance according to ISO 9906.

MODEL	Q=m³/h	0	60	66	72	78	84	90	102	114	120	150	180
	Q=l/min	0	1000	1100	1200	1300	1400	1500	1700	1900	2000	2500	3000
NKM-G100-250/250/11 /4	H (m)	21.1	21	21	21	21	21	21	20.9	20	19.8	18	16

MODEL	ELECTRICAL DATA						
	MOTOR SIZE	POWER INPUT 50 Hz	P2 NOMINAL		In A		MOTOR TYPE
			kW	HP	IE2	IE3	
NKM-G100-250/250/11 /4	MEC 160 M	400 V Δ	11	15	–	20,5	IE3

MODEL	A	B	E	F		G	H1	H2	L	M1	M2	N1	N2	N3	S1	S2	W	X	H4	Ø (mm) Mech. seal	DNA	DNM	PACKING DIMENSIONS			VOL. (m³)	WEIGHT kg	
				IE2	IE3																		L/A	L/B	H		IE2	IE3
NKM-G100-250/250/11 /4	140	80	210	–	505	424	225	280	413	160	120	400	315	254	M14	M12	381	140	65	38	125	100	1030	530	640	0,349	–	213

NKM-G 125-250 - SWIMMING POOL STANDARDISED MONOBLOC CENTRIFUGAL ELECTRIC PUMPS

Pumped liquid temperature range: from -10 °C to +140 °C - Maximum ambient temperature: +40 °C

≅ 1450 1/min

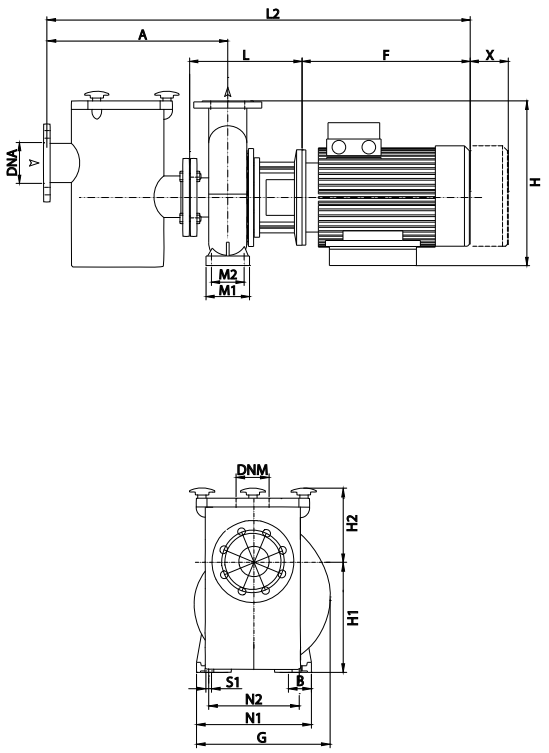

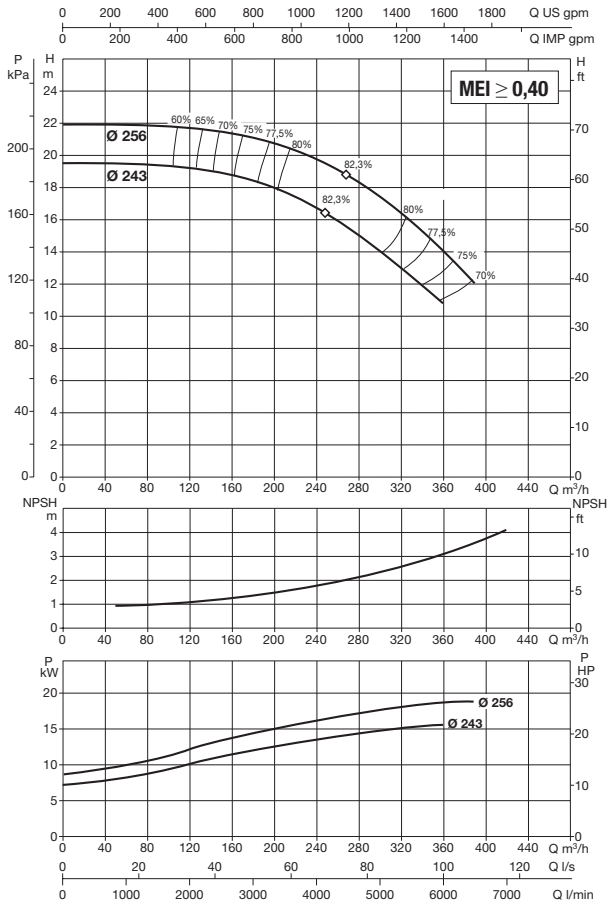

PUMP AND PREFILTER ARE SOLD SEPARATELY
For further information contact our sales network.

The performance curves are based on kinematic viscosity values = 1 mm²/s and density equal to 1000 kg/m³. Curve tolerance according to ISO 9906.

MODEL	Q=m³/h	0	102	114	120	150	180	210	240	270	300	330	360	390
	Q=l/min	0	1700	1900	2000	2500	3000	3500	4000	4500	5000	5500	6000	6500
NKM-G125-250/243/15 /4	H (m)	19.5	19.3	19.3	19.2	19.2	18.7	17.8	16.8	15.5	14.1	12.5	10.9	
NKM-G125-250/256/18.5 /4		21.9	21.8	21.8	21.7	21.6	21.3	20.5	19.5	18.5	17.2	15.6	14	12

MODEL	ELECTRICAL DATA						
	MOTOR SIZE	POWER INPUT 50 Hz	P2 NOMINAL		In A		MOTOR TYPE
			kW	HP	IE2	IE3	
NKM-G125-250/243/15 /4	MEC 160 L	400 V Δ	15	20	–	28	IE3
NKM-G125-250/256/18.5 /4	MEC 180 M	400 V Δ	18.5	25	–	34	IE3

MODEL	A	B	E	F		G	H1	H2	L	M1	M2	N1	N2	N3	S1	S2	W	X	H4	Ø (mm) Mech. seal	DNA	DNM	PACKING DIMENSIONS			VOL. (m³)	WEIGHT kg	
				IE2	IE3																		L/A	L/B	H		IE2	IE3
NKM-G125-250/243/15 /4	140	80	254	–	548	472	250	355	413	160	120	400	315	254	M14	M12	381	140	90	38	150	125	1130	580	740	0,485	–	274
NKM-G125-250/256/18.5 /4	140	80	241	–	580	472	250	355	413	160	120	400	315	279	M14	M12	394	140	70	38	150	125	1130	580	740	0,485	–	290

DAB PUMPS reserves the right to make modifications without notice.

NKM-G 150-200 - SWIMMING POOL STANDARDISED MONOBLOC CENTRIFUGAL ELECTRIC PUMPS

Pumped liquid temperature range: from -10 °C to +140 °C - **Maximum ambient temperature:** +40 °C

≅ 1450 1/min

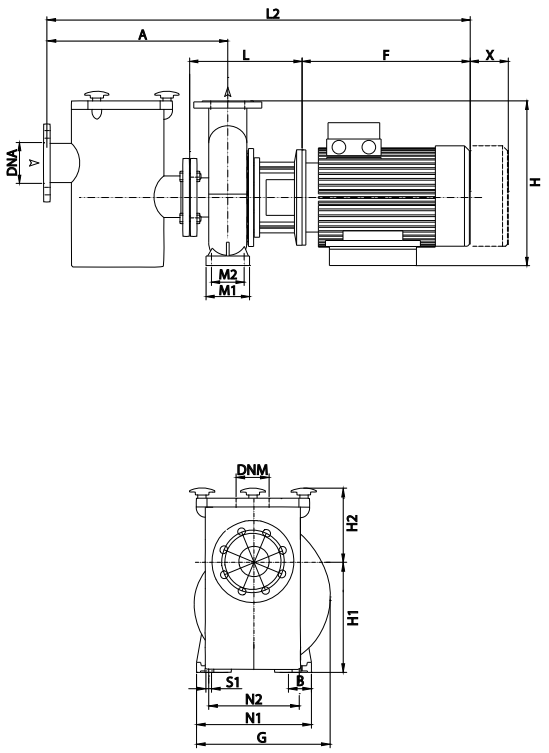

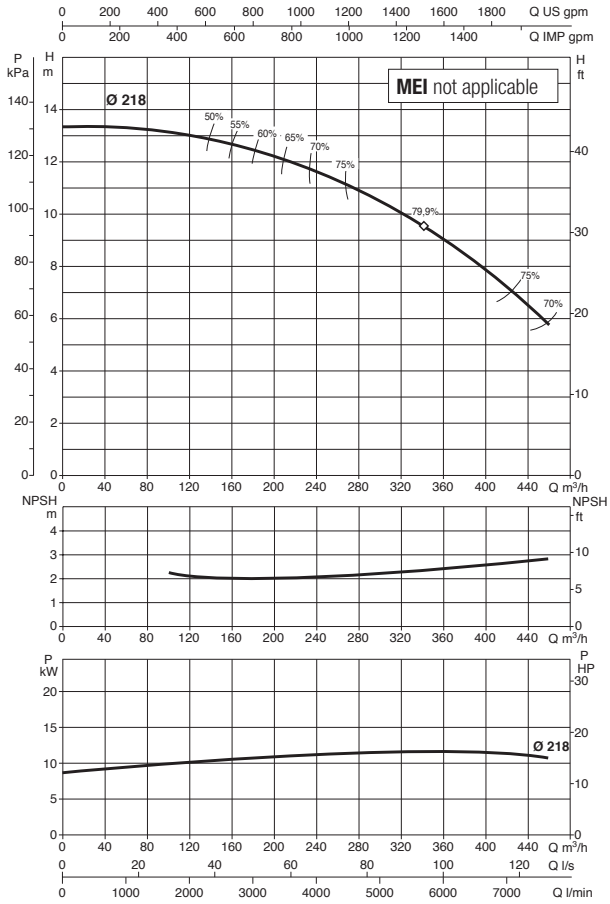

PUMP AND PREFILTER ARE SOLD SEPARATELY
For further information contact our sales network.

The performance curves are based on kinematic viscosity values = 1 mm²/s and density equal to 1000 kg/m³. Curve tolerance according to ISO 9906.

MODEL	Q=m³/h	0	102	114	120	150	180	210	240	270	300	330	360	390	420
	Q=l/min	0	1700	1900	2000	2500	3000	3500	4000	4500	5000	5500	6000	6500	7000
NKM-G150-200/218/11 /4	H (m)	13.2	13.1	13	13	12.8	12.5	12.1	11.5	11	10.4	9.7	9	8	7

MODEL	ELECTRICAL DATA						
	MOTOR SIZE	POWER INPUT 50 Hz	P2 NOMINAL		In A		MOTOR TYPE
			kW	HP	IE2	IE3	
NKM-G150-200/218/11 /4	MEC 160 M	400 V Δ	11	15	–	20,5	IE3

MODEL	A	B	E	F		G	H1	H2	L	M1	M2	N1	N2	N3	S1	W	X	H4	Ø (mm) Mech. seal	DNA	DNM	PACKING DIMENSIONS			VOL. (m³)	WEIGHT kg	
				IE2	IE3																	L/A	L/B	H		IE2	IE3
NKM-G150-200/218/11 /4	160	100	210	–	505	593	280	400	433	200	150	550	450	254	M20	381	140	120	38	200	150	1130	650	900	0,661	–	280

NKP-G 40-125 - SWIMMING POOL STANDARDISED MONOBLOC CENTRIFUGAL ELECTRIC PUMPS

Pumped liquid temperature range: from -10 °C to +140 °C - Maximum ambient temperature: +40 °C

≅ 2900 1/min

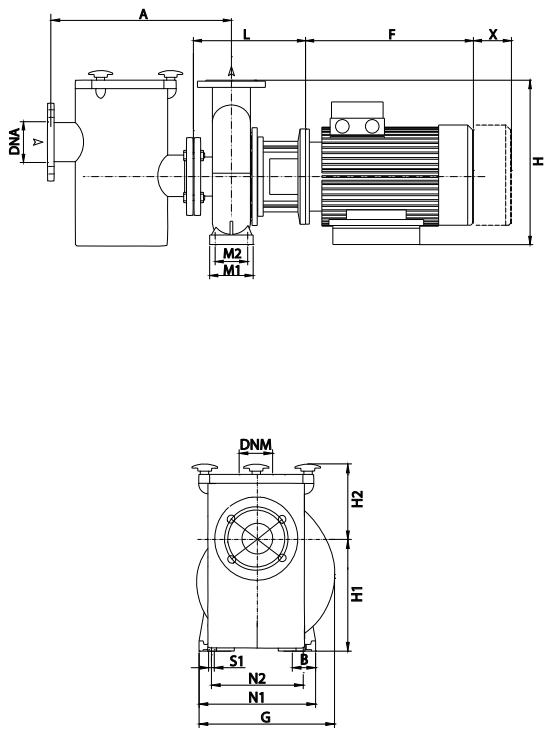

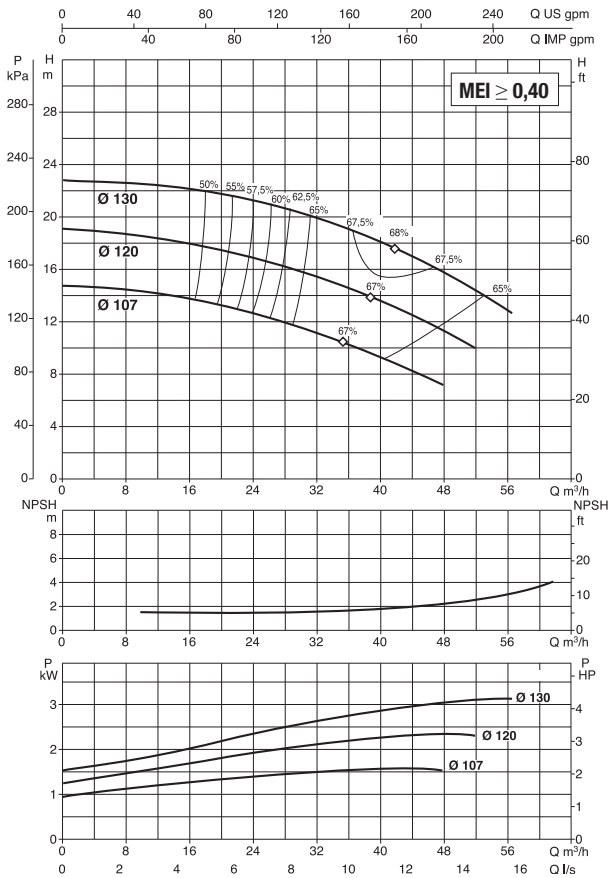

PUMP AND PREFILTER ARE SOLD SEPARATELY
For further information contact our sales network.

The performance curves are based on kinematic viscosity values = 1 mm²/s and density equal to 1000 kg/m³. Curve tolerance according to ISO 9906.

MODEL	Q=m³/h	0	6	12	18	24	30	36	42	48	54
	Q=l/min	0	100	200	300	400	500	600	700	800	900
NKP-G 40-125/107/ 1.5 /2	H (m)	14.7	14.5	14.3	13.8	13	11.8	10.5	8.6	7	
NKP-G 40-125/120/ 2.2 /2		19	18.7	18.4	17.8	17	15.9	14.6	13	11	
NKP-G 40-125/130/ 3 /2		22.8	22.5	22.3	22	21.2	20.2	19	17.4	15.5	13.5

MODEL	ELECTRICAL DATA						
	MOTOR SIZE	POWER INPUT 50 Hz	P2 NOMINAL		In A		MOTOR TYPE
			kW	HP	IE2	IE3	
NKP-G 40-125/107/ 1.5 /2	MEC 90 S	230/400 V	1.5	2	5.8/3.35	–	IE2
NKP-G 40-125/120/ 2.2 /2	MEC 90 L	230/400 V	2.2	3	8.23/4.75	–	IE2
NKP-G 40-125/130/ 3 /2	MEC 100 L	400 V Δ	3	4	5,85	–	IE2

MODEL	A	B	F		G	H1	H2	L	M1	M2	N1	N2	S1	X	H3	Ø (mm) Mech. seal	DNA	DNM	PACKING DIMENSIONS			VOLUME (m³)	WEIGHT kg	
			IE2	IE3															L/A	L/B	H		IE2	IE3
NKP-G 40-125/107/ 1.5 /2	80	50	247	–	234	112	140	226	100	70	210	160	M10	100	–	28	65	40	620	370	480	0,110	57	–
NKP-G 40-125/120/ 2.2 /2	80	50	272	–	234	112	140	226	100	70	210	160	M10	100	–	28	65	40	620	370	480	0,110	70	–
NKP-G 40-125/130/ 3 /2	80	50	301	–	300	112	140	254	100	70	210	160	M10	100	20	28	65	40	670	420	540	0,152	76	–

DAB PUMPS reserves the right to make modifications without notice.

NKP-G 50-125 - SWIMMING POOL STANDARDISED MONOBLOC CENTRIFUGAL ELECTRIC PUMPS

Pumped liquid temperature range: from -10 °C to +140 °C - Maximum ambient temperature: +40 °C

≅ 2900 1/min

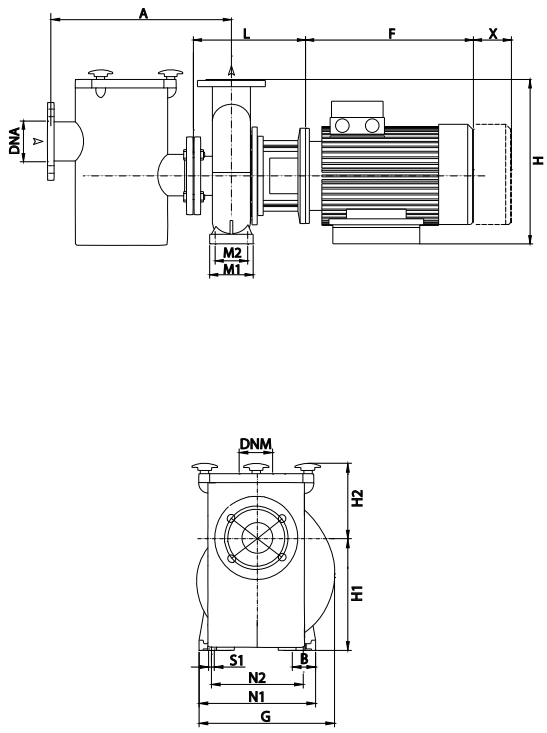

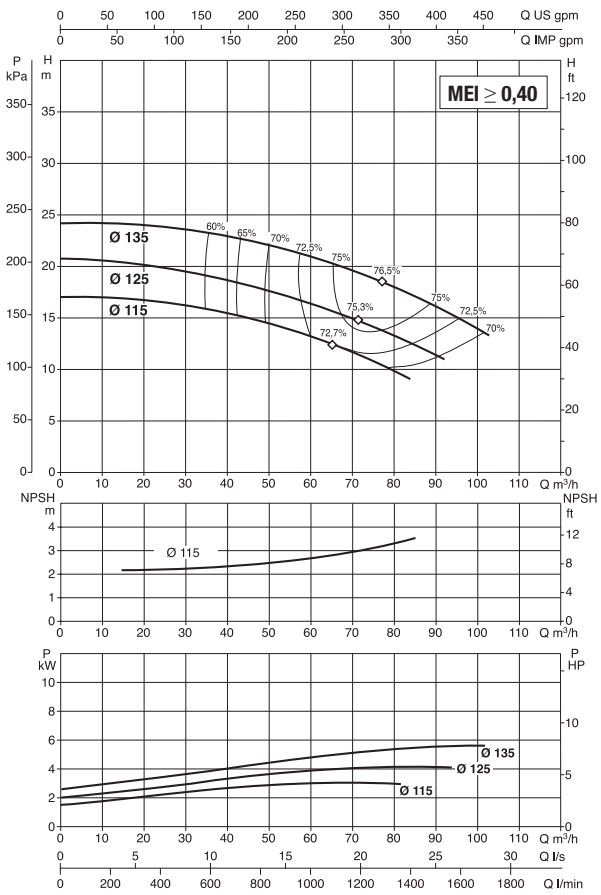

PUMP AND PREFILTER ARE SOLD SEPARATELY
For further information contact our sales network.

The performance curves are based on kinematic viscosity values = 1 mm²/s and density equal to 1000 kg/m³. Curve tolerance according to ISO 9906.

MODEL	Q=m³/h	0	24	30	36	42	48	54	60	66	72	78	84	90	102
	Q=l/min	0	400	500	600	700	800	900	1000	1100	1200	1300	1400	1500	1700
NKP-G 50-125/115/ 3 /2	H (m)	17	16.5	16	15.5	15	14.5	13.7	13	12	11	10	9		
NKP-G 50-125/125/ 4 /2		20.5	20	19.5	19.1	18.5	18	17.5	16.5	15.8	14.8	14	12.5	11.5	
NKP-G 50-125/135/ 5.5 /2		24	23.6	23.5	23.2	22.8	22.2	21.5	21	20	19.1	18.5	17.5	16.5	13.4

MODEL	ELECTRICAL DATA						
	MOTOR SIZE	POWER INPUT 50 Hz	P2 NOMINAL		In A		MOTOR TYPE
			kW	HP	IE2	IE3	
NKP-G 50-125/115/ 3 /2	MEC 100 L	400 V Δ	3	4	5,85	–	IE2
NKP-G 50-125/125/ 4 /2	MEC 112 M	400 V Δ	4	5.5	8,05	–	IE2
NKP-G 50-125/135/ 5.5 /2	MEC 132 S	400 V Δ	5.5	7.5	10.4	–	IE2

MODEL	A	B	F		G	H1	H2	L	M1	M2	N1	N2	S1	X	H3	Ø (mm) Mech. seal	DNA	DNM	PACKING DIMENSIONS			VOLUME (m³)	WEIGHT kg	
			IE2	IE3															L/A	L/B	H		IE2	IE3
NKP-G 50-125/115/ 3 /2	100	50	301	–	251	132	160	274	100	70	240	190	M10	100	–	28	65	50	670	420	540	0,152	78	–
NKP-G 50-125/125/ 4 /2	100	50	301	–	251	132	160	274	100	70	240	190	M10	100	–	28	65	50	670	420	540	0,152	113	–
NKP-G 50-125/135/ 5.5 /2	100	50	390	–	300	132	160	313	100	70	240	190	M10	100	20	28	65	50	830	430	520	0,186	115	–

NKP-G 65-125 - SWIMMING POOL STANDARDISED MONOBLOC CENTRIFUGAL ELECTRIC PUMPS

Pumped liquid temperature range: from -10 °C to +140 °C - Maximum ambient temperature: +40 °C

≅ 2900 1/min

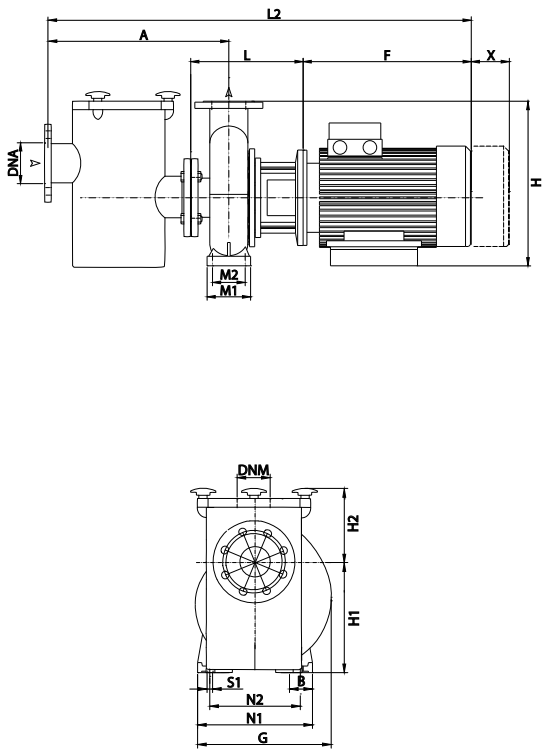

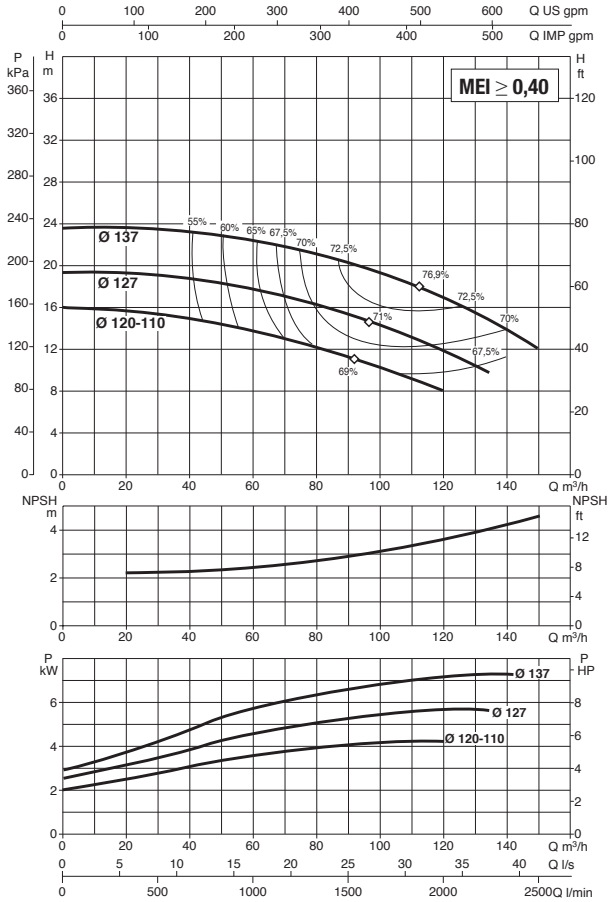

PUMP AND PREFILTER ARE SOLD SEPARATELY
For further information contact our sales network.

The performance curves are based on kinematic viscosity values = 1 mm²/s and density equal to 1000 kg/m³. Curve tolerance according to ISO 9906.

MODEL	Q=m³/h	0	36	42	48	54	60	66	72	78	84	90	102	114	120	150
	Q=l/min	0	600	700	800	900	1000	1100	1200	1300	1400	1500	1700	1900	2000	2500
NKP-G 65-125/120-110/4/2	H (m)	16	15	14.6	14.2	13.7	13.3	12.8	12.3	12	11.4	10	8.5	8		
NKP-G 65-125/127/ 5.5 /2		19.5	19	18.9	18.7	18.4	18.1	17.5	17.2	16.9	16.5	15.8	14.5	13	12	
NKP-G 65-125/137/ 7.5 /2		23.5	23.1	23	22.8	22.6	22.5	22	21.6	21.1	20.7	20.2	19	17.5	14.8	12

MODEL	ELECTRICAL DATA						
	MOTOR SIZE	POWER INPUT 50 Hz	P2 NOMINAL		In A		MOTOR TYPE
			kW	HP	IE2	IE3	
NKP-G 65-125/120-110/4/2	MEC 112	400 V Δ	4	5,5	8,05	–	IE2
NKP-G 65-125/127/ 5.5 /2	MEC 132 S	400 V Δ	5.5	7,5	10.4	–	IE2
NKP-G 65-125/137/ 7.5 /2	MEC 132 S	400 V Δ	7.5	10	–	13,4	IE3

MODEL	A	B	F		G	H1	H2	L	M1	M2	N1	N2	S1	X	Ø (mm) Mech. seal	DNA	DNM	PACKING DIMENSIONS			VOLUME (m³)	WEIGHT kg	
			IE2	IE3														L/A	L/B	H		IE2	IE3
NKP-G 65-125/120-110/4/2	100	65	301	–	286	160	180	274	125	95	280	212	M10	100	28	80	65	670	420	540	0,152	104	–
NKP-G 65-125/127/ 5.5 /2	100	65	390	–	300	160	180	313	125	95	280	212	M10	100	28	80	65	830	430	520	0,186	113	–
NKP-G 65-125/137/ 7.5 /2	100	65	–	437	300	160	180	313	125	95	280	212	M10	100	28	80	65	830	430	520	0,186	–	94

DAB PUMPS reserves the right to make modifications without notice.

NKP-G 80-160 - SWIMMING POOL STANDARDISED MONOBLOC CENTRIFUGAL ELECTRIC PUMPS

Pumped liquid temperature range: from -10 °C to +140 °C - Maximum ambient temperature: +40 °C

≅ 2900 1/min

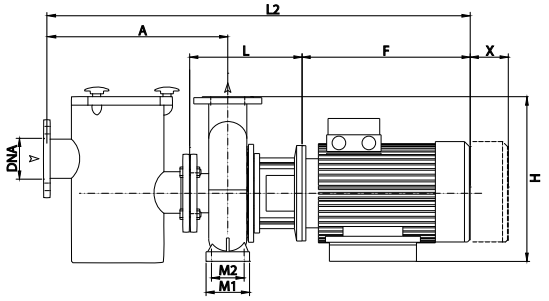

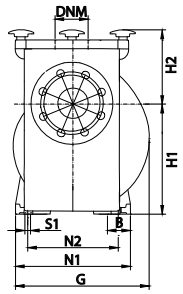

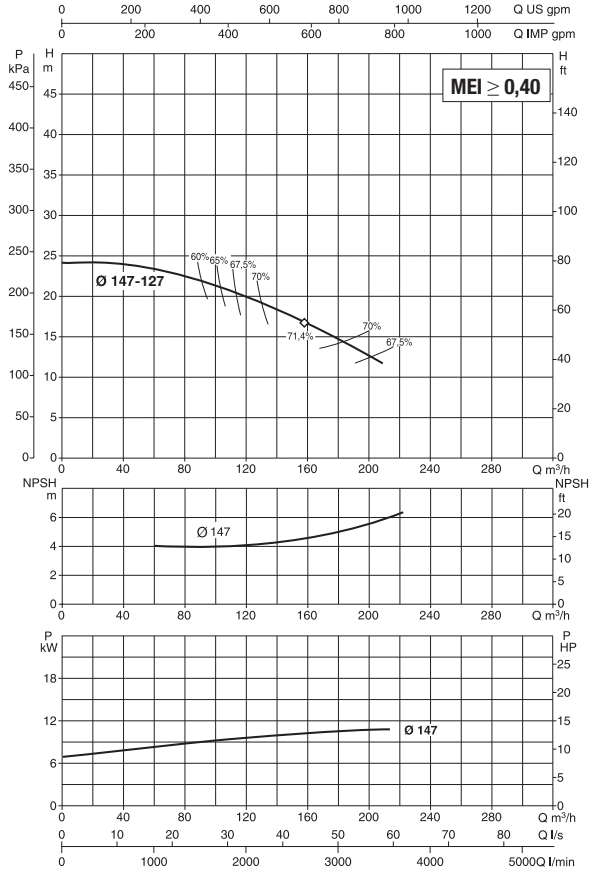

PUMP AND PREFILTER ARE SOLD SEPARATELY
For further information contact our sales network.

The performance curves are based on kinematic viscosity values = 1 mm²/s and density equal to 1000 kg/m³. Curve tolerance according to ISO 9906.

MODEL	Q=m³/h	0	90	102	114	120	150	180	210
	Q=l/min	0	1500	1700	1900	2000	2500	3000	3500
NKP-G 80-160/147-127/11 /2	H (m)	24	22	21.4	20.4	20	17.4	16.8	12

MODEL	ELECTRICAL DATA						
	MOTOR SIZE	POWER INPUT 50 Hz	P2 NOMINAL		In A		MOTOR TYPE
			kW	HP	IE2	IE3	
NKP-G 80-160/147-127/11 /2	MEC 160 M	400 V Δ	11	15	–	19,4	IE3

MODEL	A	B	E	F		G	H1	H2	L	N1	N2	S1	W	X	H4	Ø (mm) Mech. seal	DNA	DNM	PACKING DIMENSIONS			VOLUME (m³)	WEIGHT kg	
				IE2	IE3														L/A	L/B	H		IE2	IE3
NKP-G 80-160/147-127/11 /2	125	67	210	–	505	350	160	225	368	314	254	M12	351	140	20	28	100	80	1030	530	640	0,349	–	179

PUMP/FILTER/FASTENING KIT SELECTION DIAGRAM

BASIC VERSION

POLES		PUMP TYPE	PREFILTER		FILTER-PUMP FASTENING KIT	
2	4	MODEL	PHOTO	MODEL	PHOTO	MODEL
	•	NKM-G40-200/200/A/BAQV/1,1/4		PREFILTER 65/65		DN 65 PREFILTER FASTENING KIT
	•	NKM-G40-200/219/A/BAQV/1,5/4				
	•	NKM-G40-250/245/A/BAQV/2,2/4				
	•	NKM-G50-160/177/A/BAQV/1,5 /4				
	•	NKM-G50-200/210/A/BAQV/2,2/4				
	•	NKM-G50-200/219/A/BAQV/3/4				
	•	NKM-G50-250/263/A/BAQV/4/4				
•		NKP-G 40-125/107/A/BAQV/1,5/2				
•		NKP-G 40-125/120/A/BAQV/2,2/2				
•		NKP-G 40-125/130/A/BAQV/3/2				
•		NKP-G 50-125/115/A/BAQV/3/2				
•		NKP-G 50-125/125/A/BAQV/4/2				
•		NKP-G 50-125/135/A/BAQV/5,5/2				
	•	NKM-G65-200/210/A/BAQV/3/4		PREFILTER 80/80	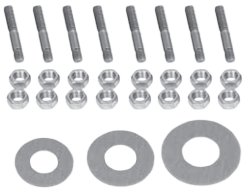	DN 80-100-125 PREFILTER FASTENING KIT
	•	NKM-G65-200/219/A/BAQV/4/4				
	•	NKM-G65-250/263/A/BAQV/5,5/4				
•		NKP-G 65-125/120-110/A/BAQV/4/2				
•		NKP-G 65-125/127/A/BAQV/5,5/2				
•		NKP-G 65-125/137/A/BAQV/7,5/2				
	•	NKM-G80-200/200/A/BAQV/4/4		PREFILTER 100/100		
	•	NKM-G80-200/222/A/BAQV/5,5/4				
	•	NKM-G80-250/240/A/BAQV/7,5/4				
	•	NKM-G80-250/270/A/BAQV/11/4				
•		NKP-G 80-160/147-127/A/BAQV/11/2				
	•	NKM-G100-200/200/A/BAQV/ 5.5/4		PREFILTER 125/125		
	•	NKM-G100-200/214/A/BAQV/ 7.5/4				
	•	NKM-G100-250/250/A/BAQV/11 /4				
	•	NKM-G125-250/243/A/BAQV/15/4		PREFILTER 150/150	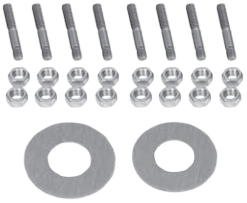	DN 150-200 PREFILTER FASTENING KIT
	•	NKM-G125-250/256/A/BAQV/18,5/4				
	•	NKM-G150-200/218/A/BAQV/11/4		PREFILTER 200/200		

DAB PUMPS reserves the right to make modifications without notice.

PUMP/FILTER/FASTENING KIT SELECTION DIAGRAM

TOP VERSION

POLES		PUMP TYPE	PREFILTER		FILTER-PUMP FASTENING KIT	
2	4	MODEL	PHOTO	MODEL	PHOTO	MODEL
	•	NKM-G 40-200/200/B/BAQV/1,1/4		PREFILTER 65/65		DN 65 PREFILTER FASTENING KIT
	•	NKM-G 40-200/219/B/BAQV/1,5/4				
	•	NKM-G 40-250/245/B/BAQV/2,2/4				
	•	NKM-G 50-160/177/B/BAQV/1,5/4				
	•	NKM-G 50-200/210/B/BAQV/2,2/4				
	•	NKM-G 50-200/219/B/BAQV/3/4				
	•	NKM-G 50-250/263/B/BAQV/4/4				
•		NKP-G 40-125/107/B/BAQV/1,5/2				
•		NKP-G 40-125/120/B/BAQV/2,2/2				
•		NKP-G 40-125/130/B/BAQV/3/2				
•		NKP-G 50-125/115/B/BAQV/3/2				
•		NKP-G 50-125/125/B/BAQV/4/2				
•		NKP-G 50-125/135/B/BAQV/5,5/2				
	•	NKM-G 65-200/210/B/BAQV/3/4		PREFILTER 80/80	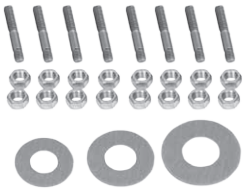	DN 80-100-125 PREFILTER FASTENING KIT
	•	NKM-G 65-200/219/B/BAQV/4/4				
	•	NKM-G 65-250/263/B/BAQV/5,5/4				
•		NKP-G 65-125/120-110/B/BAQV/4/2				
•		NKP-G 65-125/127/B/BAQV/5,5/2				
•		NKP-G 65-125/137/B/BAQV/7,5/2				
	•	NKM-G 80-200/200/B/BAQV/4/4		PREFILTER 100/100		
	•	NKM-G 80-200/222/B/BAQV/5,5/4				
	•	NKM-G 80-250/240/B/BAQV/7,5/4				
	•	NKM-G 80-250/270/B/BAQV/11/4				
•		NKP-G 80-160/147-127/B/BAQV/11/2				
	•	NKM-G 100-200/200/B/BAQV/5,5/4		PREFILTER 125/125		
	•	NKM-G 100-200/214/B/BAQV/7,5/4				
	•	NKM-G 100-250/250/B/BAQV/11/4				
	•	NKM-G 125-250/243/B/BAQV/15/4		PREFILTER 150/150	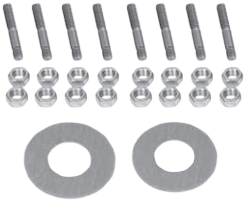	DN 150-200 PREFILTER FASTENING KIT
	•	NKM-G 125-250/256/B/BAQV/18,5/4				
	•	NKM-G 150-200/218/B/BAQV/11/4		PREFILTER 200/200		

DAB PUMPS reserves the right to make modifications without notice.

EUROCOVER

SWIMMING POOL SUBMERSIBLE ELECTRIC PUMPS

TECHNICAL DATA

Operating range:
from 0.5 to 6 m³/h with head up to 6.5 metres.
Liquid temperature range:
from 0 °C to 35 °C (EN 60335-2-41).
Installation: fixed or portable, vertical position (max. inclination 10 °).
Free passage of solids: 5 mm.
Automatic start / stop: start 55mm - stop 35mm.
Motor protection class: IP68.
Insulation class: F.
Power input voltage: 230V - 50 Hz single-phase.

APPLICATIONS

Fully automatic submersible electric pump, large support base design to increase stability and the possibility of operation in positions not perfectly perpendicular to the soil.
Built-in float for automatic operation; efficient and maintenance-free pump.
Suitable for winter use on top of swimming pool covers, to remove rain water and prevent the cover itself from breaking due to the heavy weight of the accumulated water.
In case of need, it can become an emptying and draining submersible pump, or a portable pump in emergency cases.

CONSTRUCTION FEATURES OF THE PUMP

Electric pump in resistant thermoplastic material.
Stainless steel motor, shaft, and bolts and screws.
Threefold seal with interposed rings with oil pre-chamber.
Built-in float for automatic operation in inspectionable housing.
Dedicated to seasonal cleaning.

CONSTRUCTION FEATURES OF THE MOTOR

Submersible, asynchronous, continuous service.
Stator inside a stainless steel enclosure, covered by wiring cap and capacitor.
Supplied with 10 m cable and Shuko plug / 10 m cord for positioning on tarpaulin.
Multi rubber connector with clapet valve.

MATERIALS

N.	PARTS*		MATERIALS
1	MOTOR	SHAFT	AISI 416 stainless steel
		LINER	AISI 304 stainless steel
3	WASHER		AISI 304 stainless steel
4	IMPELLER		TECHNOPOLYMER
5	NUT		AISI 304 stainless steel
6	O-RING		NBR
7	BASE		TECHNOPOLYMER
8	PUMP BODY		TECHNOPOLYMER
25	O-RING		NBR
26	PUMP COVER		TECHNOPOLYMER
28	FLOAT		TECHNOPOLYMER
29	CLOSING SPHERE		EPDM
33	UPPER BODY		TECHNOPOLYMER
34	HANDLE		TECHNOPOLYMER
35	LOWER BODY		TECHNOPOLYMER
36	SCREW		AISI 304
37	FLOAT INSPECTION COVER		TECHNOPOLYMER

* In contact with the liquid

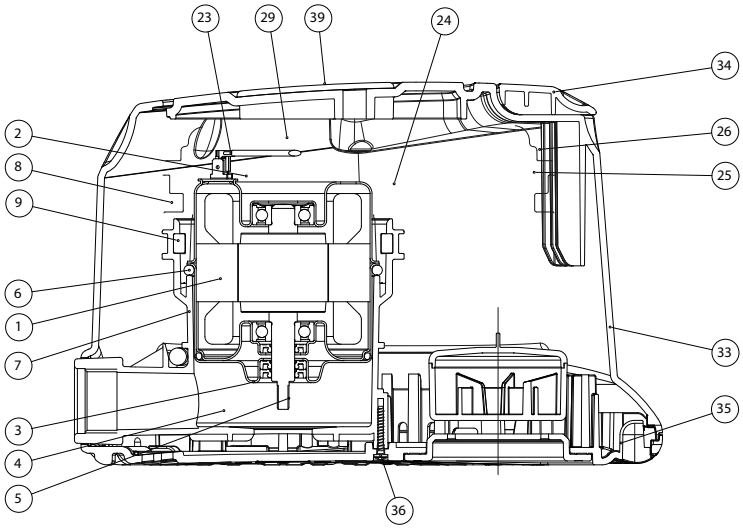

EUROCOVER - SWIMMING POOL COVER SUBMERSIBLE DRAINING ELECTRIC PUMPS

Liquid temperature range: from 0 °C to +35 °C - **Maximum ambient temperature:** +40 °C

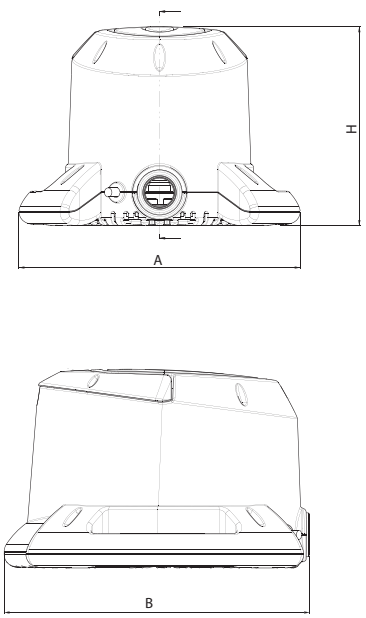

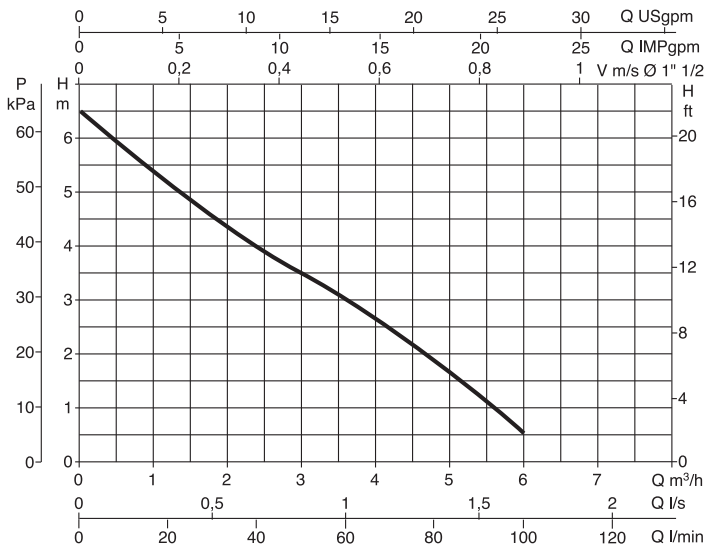

The performance curves are based on kinematic viscosity values = 1 mm²/s and density equal to 1000 kg/m³. Curve tolerance according to ISO 9906.

MODEL	Q= m³/h	0	1,2	2,4	3,6	4,8	6
	Q=l/min	0	20	40	60	80	100
EUROCOVER	H (m)	6,5	5,1	4	3	1,9	0,5

MODEL	POWER INPUT 50 Hz	P1 MAX kW	In A	P2 NOMINAL		CAPACITOR	
				kW	HP	µF	Vc
EUROCOVER	230 V ~	250	1,1	0,22	0,3	8	–

MODEL	A	B	H	PACKING DIMENSIONS			WEIGHT kg
				L/A	L/B	H	
EUROCOVER	280,2	304,4	198,1	290	230	320	4,6

JETCOM SP - EUROCOM SP

SWIMMING POOL CENTRIFUGAL ELECTRIC PUMPS

TECHNICAL DATA

Operating range:
from 10 to 80 l/min. with head up to 58 metres.
Pumped liquid: clean, free from solids or abrasives, swimming pool water (containing chlorine).
Liquid temperature range:
from 0 °C to +35 °C for domestic use (EN 60335-2-41).
from 0 °C to +40 °C for other uses.
Maximum ambient temperature: +40°C.
Maximum operating pressure: 6 bar (600 kPa).
Installation: fixed or portable, horizontal position.
Motor protection class: IP 44.
Protection class at the terminal board: IP 55.
Insulation class: F.
Standard voltage: Single-phase 220/240 V - 50 Hz - 2 poles
Three-phase 230/400 V - 50 Hz - 2 poles

APPLICATIONS

Centrifugal self-priming pump with high suction capacity also when air bubbles are present. Suitable for use with water with small sandy impurities. Particularly suited for water supply in domestic systems: circulation of aggressive water in general, containing chlorine (swimming pool water).

CONSTRUCTION FEATURES OF THE PUMP

Technopolymer pump body. AISI 316 STAINLESS STEEL seal holder, support. Carbon/ceramic mechanical seal. Pump shaft in AISI 316 STAINLESS STEEL. Technopolymer impeller, diffuser, venturi tubes, and sand guard. Stainless steel adjustment rings.

CONSTRUCTION FEATURES OF THE MOTOR

Continuous service asynchronous motor.
The single-phase version has built-in thermal-amperometric protection and permanently connected capacitor.
Overload protection to be provided by the user for the three-phase version.

MATERIALS - JETCOM SP

N.	PARTS*	MATERIALS
1	PUMP BODY	TECHNOPOLYMER A
4	IMPELLER	TECHNOPOLYMER A
7	SHAFT WITH ROTOR	AISI 316 STAINLESS STEEL
16	MECHANICAL SEAL	CARBON / CERAMIC
28	OR RING	NBR
36	SEAL COVER	AISI 316 STAINLESS STEEL
160	VENTURI DIFFUSER NOZZLE ASSEMBLY	TECHNOPOLYMER A

* In contact with the liquid

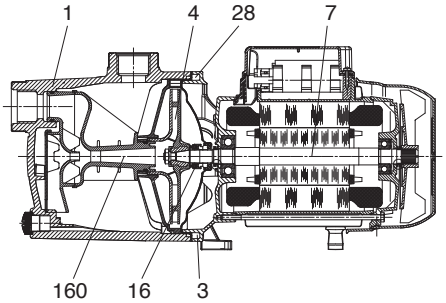

MATERIALS - EUROCOM SP

N.	PARTS	MATERIALS
1	PUMP BODY	TECHNOPOLYMER
4	IMPELLER	TECHNOPOLYMER
6	DIFFUSER	TECHNOPOLYMER
7	SHAFT WITH ROTOR	AISI 316 STAINLESS STEEL
16	MECHANICAL SEAL	CARBON / CERAMIC
28	OR RING	NBR
36	SEAL COVER	AISI 316 STAINLESS STEEL
98	DIFFUSER BODY	TECHNOPOLYMER
304	REAR DISC	TECHNOPOLYMER

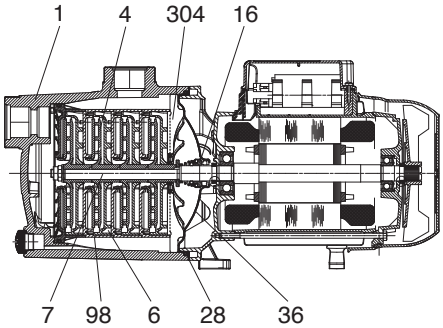

DAB PUMPS reserves the right to make modifications without notice.

JETCOM SP 102 - SWIMMING POOL WATER SUPPLY CENTRIFUGAL ELECTRIC PUMPS

Liquid temperature range: from 0 °C to +35 °C - Maximum ambient temperature: +40 °C

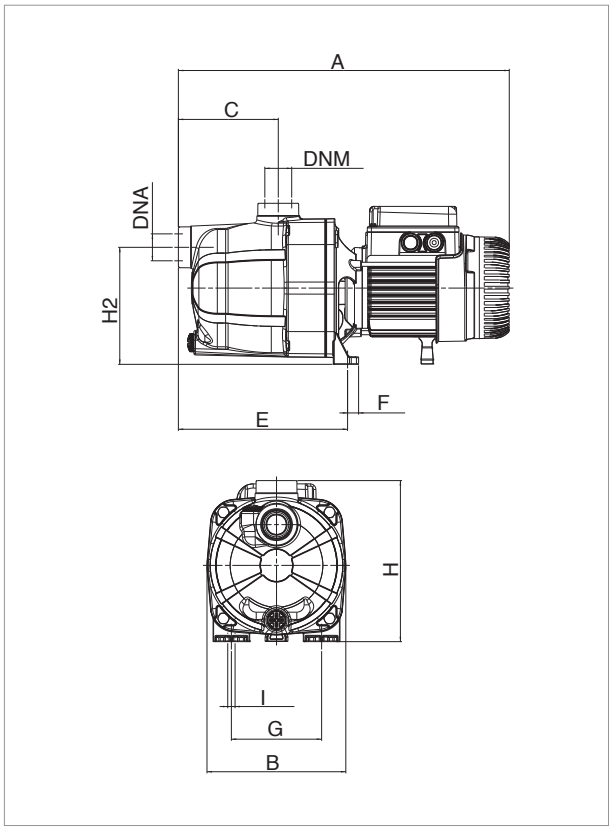

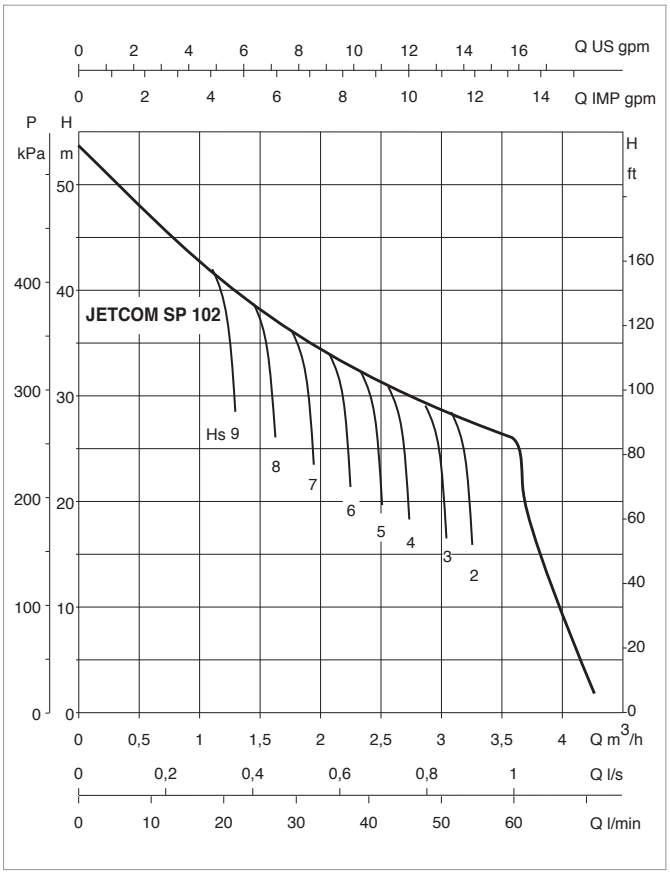

The performance curves are based on kinematic viscosity values = 1 mm²/s and density equal to 1000 kg/m³. Curve tolerance according to ISO 9906.

MODEL	Q= m³/h	0	0,6	1,2	1,8	2,4	3,0	3,6	4,2	4,8
	Q=l/min	0	10	20	30	40	50	60	70	80
JETCOM 102 SP M	H (m)	53,8	47	41	36,3	32,4	28,8	25,8		

MODEL	ELECTRICAL DATA						
	POWER INPUT 50 Hz	P1 MAX kW	P2 NOMINAL		In A	CAPACITOR	
			kW	HP		µF	Vc
JETCOM 102 SP M	1 x 220-240 V ~	1,13	0,75	1	5,1	16	450

MODEL	A	B	C	E	F	G	I Ø	H	H1	DNA	DNM	PACKING DIMENSIONS			GROSS WEIGHT kg	Q.TY X PALLET
												L/A	L/B	H		
JETCOM 102 SP M	425	170	122	208	14	111	9	203	144	1"	1"	470	240	240	9,5	28

EUROCOM SP 50 - SWIMMING POOL WATER SUPPLY CENTRIFUGAL ELECTRIC PUMPS

Liquid temperature range: from 0 °C to +35 °C - Maximum ambient temperature: +40 °C

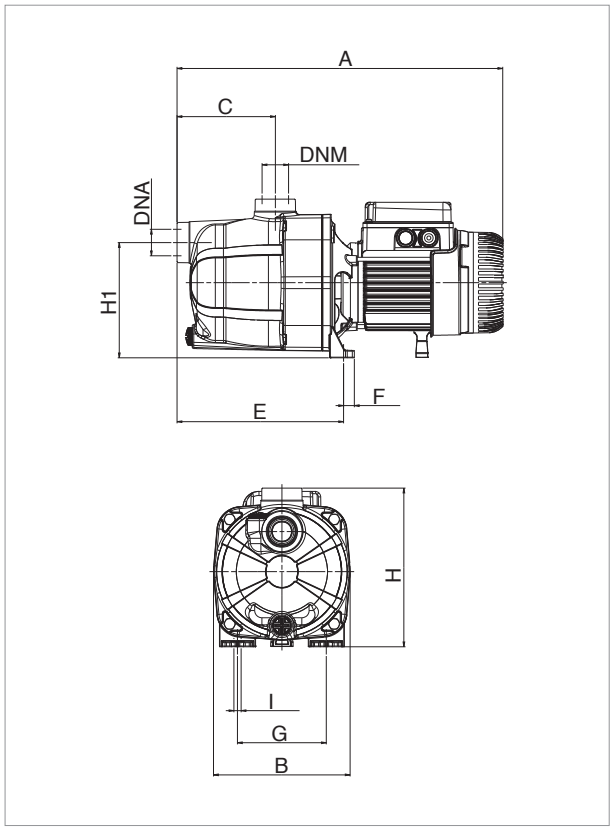

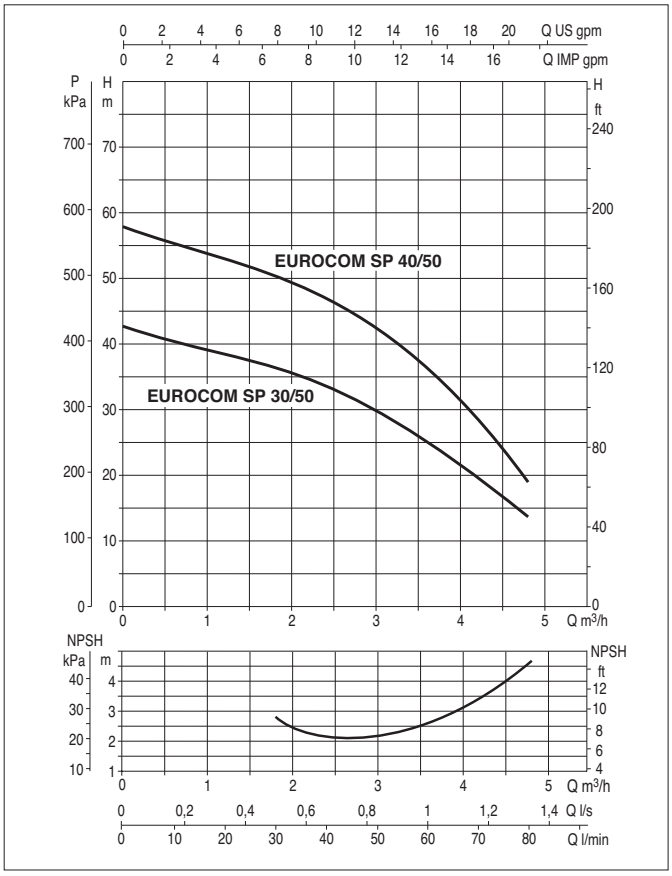

The performance curves are based on kinematic viscosity values = 1 mm²/s and density equal to 1000 kg/m³. Curve tolerance according to ISO 9906.

MODEL	Q= m³/h	0	0,6	1,2	1,8	2,4	3,0	3,3	3,6	4,2	4,8
	Q=l/min	0	10	20	30	40	50	55	60	70	80
EUROCOM SP 30/50 M-T	H (m)	42,2	40,2	38,2	36,2	33,8	30	27,5	24,8	19,5	14
EUROCOM SP 40/50 M-T		57,7	55,3	52,8	50,1	47,1	42,7	39,5	35,8	28	19,2

MODEL	ELECTRICAL DATA						
	POWER INPUT 50 Hz	P1 MAX kW	P2 NOMINAL		In A	CAPACITOR	
			kW	HP		µF	Vc
EUROCOM SP 30/50 M	1 x 220-240 V ~	880	0,55	0,75	3,9	12,5	450
EUROCOM SP 30/50 T	3 x 230-400 V ~	870	0,55	0,75	2.8-1.6	–	–
EUROCOM SP 40/50 M	1 x 220-240 V ~	1200	0,75	1	5,3	20	450
EUROCOM SP 40/50 T	3 x 230-400 V ~	1180	0,75	1	3.8-2.2	--	--

MODEL	A	B	C	E	F	G	I Ø	H	H1	DNA	DNM	PACKING DIMENSIONS			GROSS WEIGHT kg	Q.TY X PALLET
												L/A	L/B	H		
EUROCOM SP 30/50 M-T	406	170	122	208	14	111	9	198	144	1"	1"	470	240	240	8,8	28
EUROCOM SP 40/50 M-T	425	170	122	208	14	111	9	203	144	1"	1"	470	240	240	11,3	28

DAB PUMPS reserves the right to make modifications without notice.

MULTI 4 SW

SELF-PRIMING MULTISTAGE HORIZONTAL ELECTRIC PUMPS

TECHNICAL DATA

Operating range:
capacity up to 90 l/min; head up to 46 m.
Liquid temperature range:
from 0 °C to +35 °C for domestic use.
from 0 °C to +40 °C for other uses.
Pumped liquid:
Designed to specifically pump salt water.
Maximum suction capacity: 8 metres.
Maximum ambient temperature: +40 °C.
Protection class: IPX4.
Insulation class: F.
Installation: fixed or portable, horizontal position.
Special versions on requests: alternative voltages and/or frequencies.

APPLICATIONS

Horizontal axis multistage centrifugal pump, self-priming, with great suction capacity also in case of air bubbles, characterised by extremely quiet operation, specifically designed for the circulation of salt water.

CONSTRUCTION FEATURES

Technopolymer pump body, motor support, impellers, diffusers and diffuser body. All the metal parts in contact with water are made of AISI 316 stainless steel. Rotor shaft, impeller fastening nut. Carbon/ceramic mechanical seal and AISI 316 stainless steel mechanical parts. Continuous service asynchronous single phase motor. Built-in thermal-amperometric protection and permanently connected capacitor.

MATERIALS

N.	PARTS*	MATERIALS
1	SUCTION FLANGE	TECHNOPOLYMER
2	INSERT	NICKEL PLATED BRASS
3	NUT	A4 UNI 7474 STAINLESS STEEL
4	WASHER	AISI316 UNI6592 STAINLESS STEEL
5	OR RING	NBR
6	COUNTER FLANGE	TECHNOPOLYMER
7	OR RING	EPDM
8	DIFFUSER	TECHNOPOLYMER
9	IMPELLER	TECHNOPOLYMER
10	ROTOR SHAFT	AISI 316 STAINLESS STEEL UNI EN 10088-1 X5CrNiMo1712-2
11	WASHER	AISI316 UNI6592 STAINLESS STEEL
12	SEEGER RING	AISI 316 STAINLESS STEEL
13	MECHANICAL SEAL	SIC/ALOX/NBR/316/316
14	COUNTER FACE	ALOX/NBR
15	BODY	TECHNOPOLYMER
16	INSERT	NICKEL PLATED BRASS

* In contact with the liquid

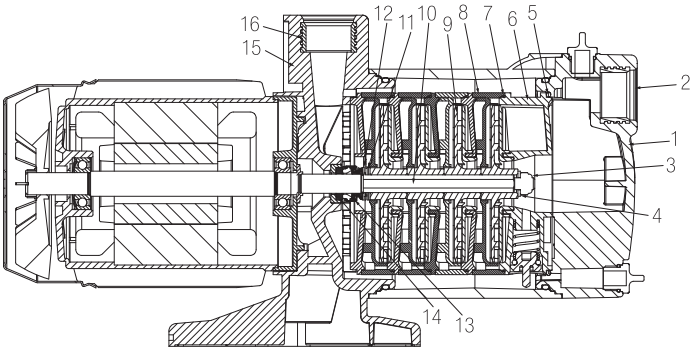

MULTI 4 SW - SALT WATER SELF-PRIMING MULTISTAGE HORIZONTAL ELECTRIC PUMPS

Pumped liquid temperature range: from 0 °C to +35 °C - Maximum ambient temperature: +40 °C

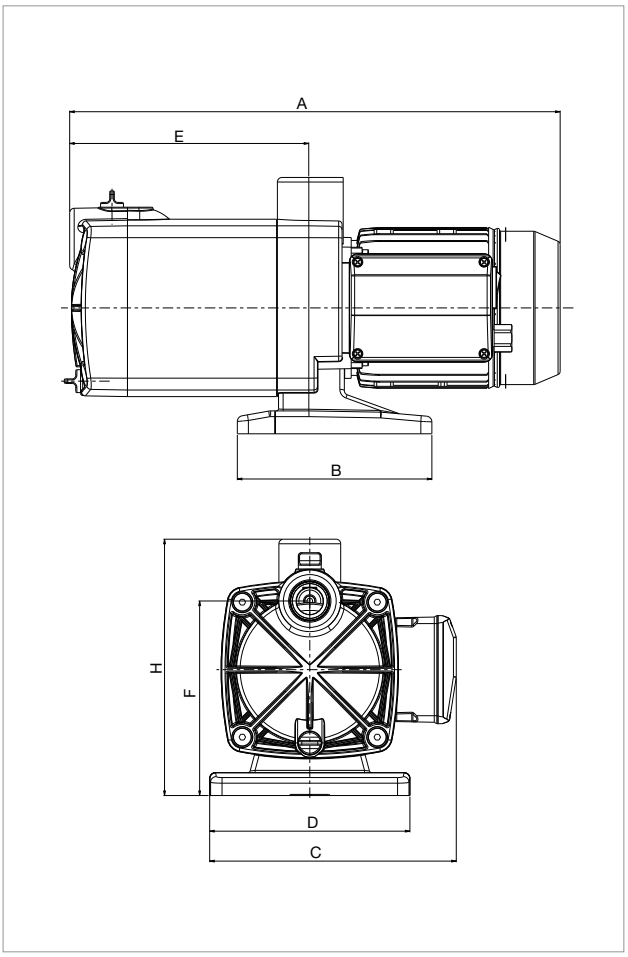

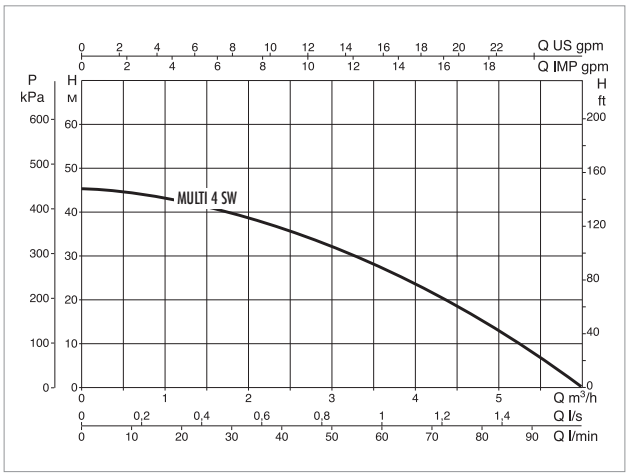

The performance curves are based on kinematic viscosity values = 1 mm^2/s and density equal to 1000 kg/m^3. Curve tolerance according to ISO 9906.

MODEL	Q= m³/h	0	0,6	1,2	1,8	2,4	3,0	3,6	4,2	4,8	5,4
	Q=l/min	0	10	20	30	40	50	60	70	80	90
MULTI 4 SW M	H (m)	46	45	43	40	38	33	28	22	16	9

MODEL	ELECTRICAL DATA							
	NO. OF IMPELLERS	POWER INPUT 50 Hz	P1 MAX kW	P2 NOMINAL		In A	CAPACITOR	
				kW	HP		µF	Vc
MULTI 4 SW M	4	1x220-240 V ~	1	0,75	1	4,5	16	450

MODEL	A	B	C	D	E	F	H	DNA GAS	DNM GAS	PACKING DIMENSIONS			WEIGHT kg
										L/A	L/B	H	
MULTI 4 SW M	430	170	215	175	209	170	224	1"	1"	460	230	270	10,6

NOVA SALT W

SUBMERSIBLE PUMPS

TECHNICAL DATA

Operating range:
from 1 to 7.5 m^3/h with head up to 6 metres.
Liquid temperature range:
from 0 °C to +35 °C for domestic use.
Pumped liquid: dirty water, without fibre, including salt water.
Max. immersion depth: 7 metres.

APPLICATIONS

The vertical delivery draining submersible pump has been specifically built for draining applications in salt water installations. It may also be used as a portable pump in emergency situations. The built-in float level switch, in the automatic version, allows fixed installation, ensuring automatic operation.

CONSTRUCTION FEATURES OF THE PUMP

Hydro resistant technopolymer pump body, cover, and suction grid.
AISI 316 stainless steel motor, rotor shaft, and bolts and screws.
Cable with tin plated conductors.

CONSTRUCTION FEATURES OF THE MOTOR

Submersible type continuous duty asynchronous motor.
Thermal overheating protection.

MATERIALS

N.	PARTS		MATERIALS
1	FILTER BASE		TECHNOPOLYMER
2	SUCTION STRAINER		TECHNOPOLYMER
3	OR RING		NBR
4	IMPELLER		TECHNOPOLYMER
5	V. RING		NBR
6	NUT		AISI 316 STAINLESS STEEL DIN 982
7	WASHER		A2 STAINLESS STEEL
8	MOTOR	CASE	ALUMINIUM
		ROTOR SHAFT	AISI 316 STAINLESS STEEL UNI EN 10088-1 X5CRNIMO1712-2
9	BODY		TECHNOPOLYMER
10	OR RING		NBR

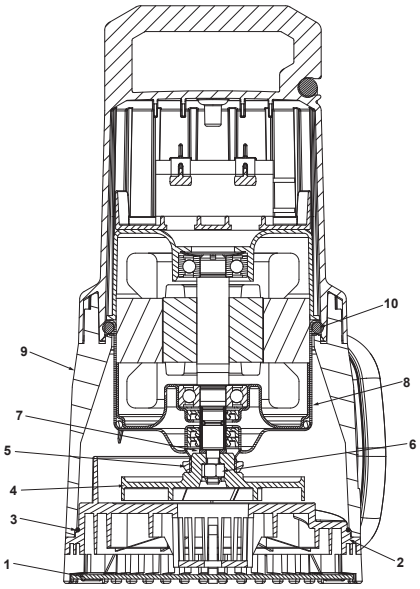

DAB PUMPS reserves the right to make modifications without notice.

NOVA SALT W - SALT WATER SUBMERSIBLE PUMPS

Liquid temperature range: from 0 °C to +35 °C for domestic use

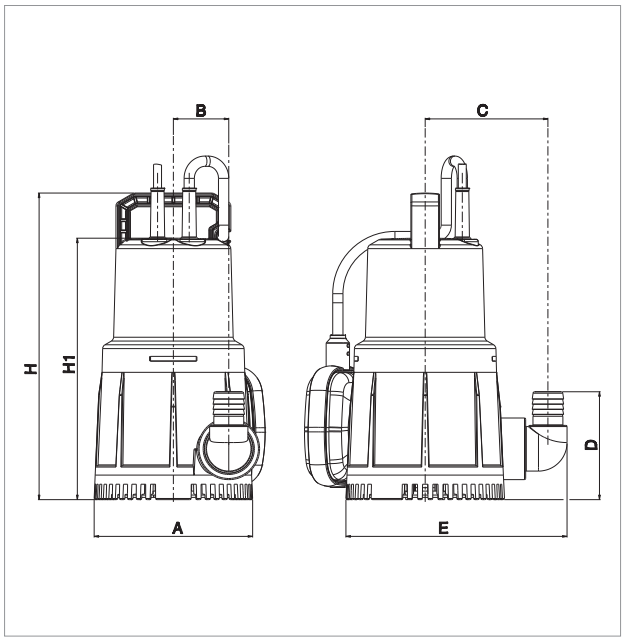

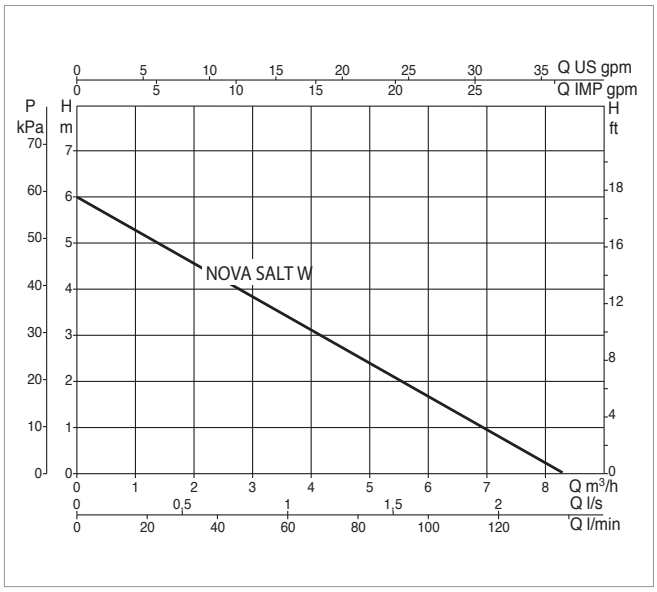

The performance curves are based on kinematic viscosity values = 1 mm²/s and density equal to 1000 kg/m³. Curve tolerance according to ISO 9906.

MODEL	Q=m³/h	0	1	2	3	4,5	5	6	7	7,5
	Q=l/min	0	16,6	33,3	50	75	83,3	100	116,6	125
NOVA SALT W M-A	H (m)	6	5,4	4,7	3,9	2,8	2,5	1,7	1	0,5

MODEL	ELECTRICAL DATA				
	POWER INPUT 50 Hz	P1 MAX kW	P2 NOMINAL		In A
			kW	HP	
NOVA SALT W M-A	1 x 230 V ~	0,28	0,2	0,28	1,3

MODEL	A	B	C	D	E	H	H1	DNM GAS	PACKING DIMENSIONS			CABLE	VOLUME (m³)	WEIGHT kg
									L/A	L/B	H			
NOVA SALT W M-A	140	48	107	95	195	270	230	1" ¼	193	193	330	10 mt.	0,012	3,9

DAB PUMPS reserves the right to make modifications without notice.

TECHNICAL DATA

Operating range:
from 1 to 14 m^3/h with head up to 9.4 metres.
Suitable for continuous operation.
Liquid temperature range:
from 0 °C to +35 °C.
Pumped liquid:
clean water, without fibres and with particles with maximum diam. 10 mm.
Max. immersion depth: 7 metres.

APPLICATIONS

Submersible pumps specifically designed for the recirculation of water in ponds, to create waterfalls and water features.

CONSTRUCTION FEATURES OF THE PUMP

Hydro resistant technopolymer pump body, wear-free impellers, cover, and suction grid.
Corrosion and oxidation resistant materials.

CONSTRUCTION FEATURES OF THE MOTOR

Submersible type continuous duty asynchronous motor.
Thermal overheating protection.
Wear-resistant motor shaft.

MATERIALS

N.	PARTS		MATERIALS
1	FILTER RING NUT		TECHNOPOLYMER
2	FILTER BASE		TECHNOPOLYMER
3	IMPELLER		TECHNOPOLYMER
4	V. RING		NBR
5	NUT		AISI 316 STAINLESS STEEL DIN 982
6	WASHER		A2 STAINLESS STEEL
7	OR RING		NBR
9	MOTOR	CASE	ALUMINIUM
		ROTOR SHAFT	AISI 416 STAINLESS STEEL UNI EN 10088-1 X12CRS13
10	BODY		TECHNOPOLYMER
11	OR RING		NBR

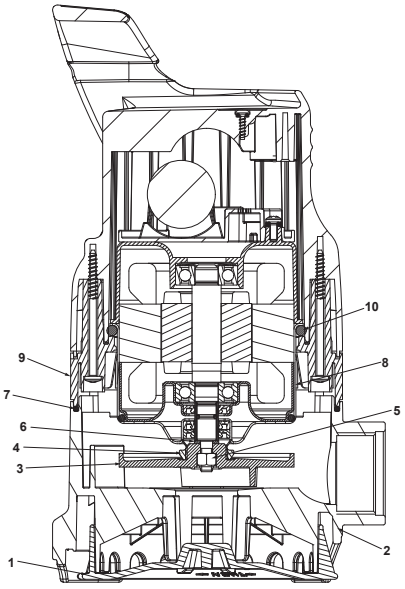

NOVAPOND - POND AND FOUNTAIN SUBMERSIBLE PUMPS

Liquid temperature range: from 0 °C to +35 °C

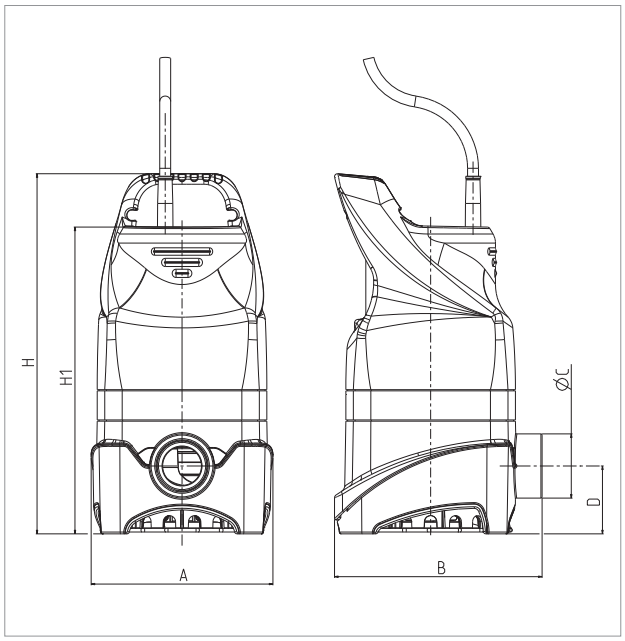

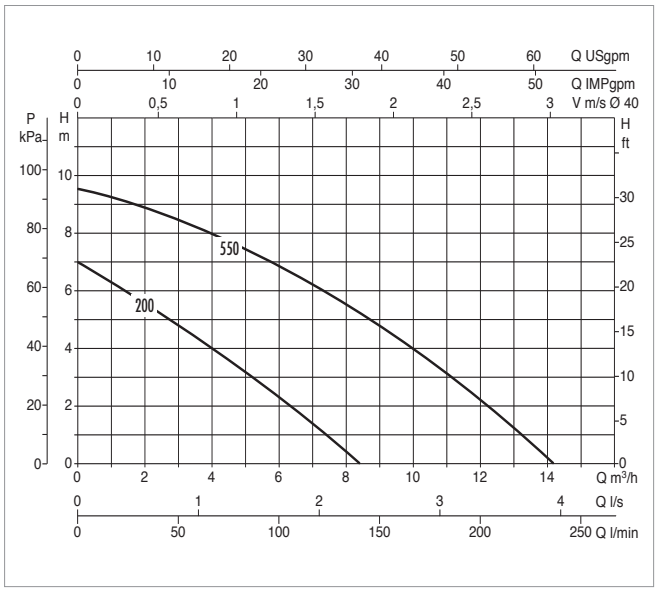

The performance curves are based on kinematic viscosity values = 1 mm²/s and density equal to 1000 kg/m³. Curve tolerance according to ISO 9906.

MODEL	Q=m³/h	0	1	2	3	4,5	6	7,5	9	10,5	12	14
	Q=l/min	0	17	33	50	75	100	125	150	175	200	233
NOVAPOND 200 M	H (m)	6,98	6,35	5,55	4,75	3,6	2,2	0,65				
NOVAPOND 550 M		9,4	9,15	8,95	8,58	7,86	6,9	5,9	4,8	3,53	2,1	0,44

MODEL	ELECTRICAL DATA				
	POWER INPUT 50 Hz	P1 MAX kW	P2 NOMINAL		In A
			kW	HP	
NOVAPOND 200 M	1 x 230 V ~	280	0,2	0,28	1,3
NOVAPOND 550 M	1 x 230 V ~	750	0,55	0,75	3,3

MODEL	A	B	Ø C	D	H	H1	DNM GAS	PACKING DIMENSIONS			CABLE	VOLUME (m³)	WEIGHT kg
								L/A	L/B	H			
NOVAPOND 200 M	150	170	53	56	300	255	1" ¼	193	193	375	10 mt.	0,010	4,3
NOVAPOND 550 M	150	170	53	56	300	285	1" ¼	193	193	375	10 mt.	0,010	6,2

DAB PUMPS reserves the right to make modifications without notice.

TECHNICAL DATA

Operating range:
from 1 to 4.6 m^3/h with head up to 3.76 metres.
Suitable for continuous operation.
Liquid temperature range:
from 0 °C to +35 °C.
Pumped liquid:
clean waters without fibres.
Max. immersion depth: 7 metres.

APPLICATIONS

Submersible pumps specifically designed for the recirculation of water in fountains and ponds, to create waterfalls and water features.
Water features included in pack.

CONSTRUCTION FEATURES OF THE PUMP

Wear-free ceramic components.
Double grid filtering system, without foam to reduce maintenance.
Impeller purposely designed to allow expulsion.

CONSTRUCTION FEATURES OF THE MOTOR

Submersible type continuous duty asynchronous motor.
Thermal protector to avoid motor overheating.
Wear-resistant motor shaft.

NINPHAEA 1/2/3 - POND AND FOUNTAIN SUBMERSIBLE PUMPS

Liquid temperature range: from 0 °C to +35 °C

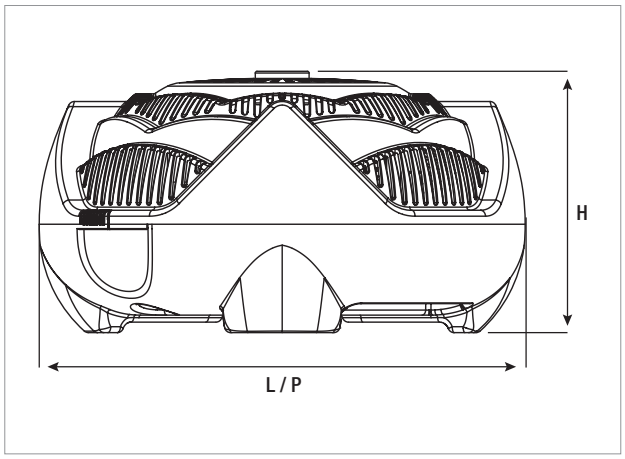

The performance curves are based on kinematic viscosity values = 1 mm²/s and density equal to 1000 kg/m³. Curve tolerance according to ISO 9906.

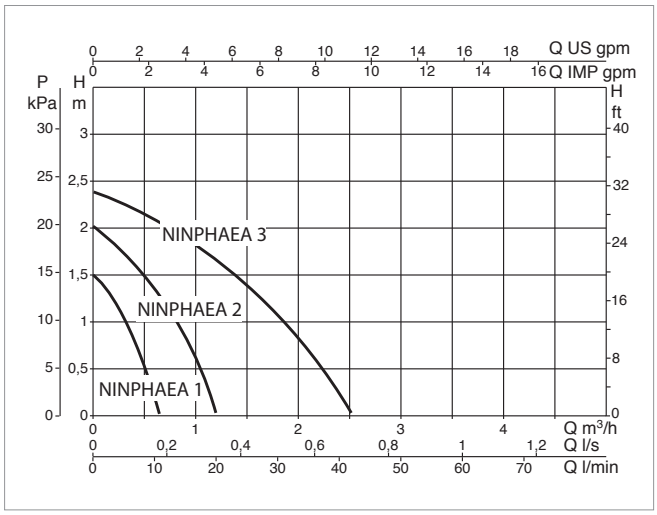

MODEL	Q=m³/h	0	0,2	0,4	0,6	0,9	1,2	1,6	2	2,4	3	3,5	4	4,6
	Q=l/min	0	3	7	10	15	20	27	33	40	50	58	67	77
NINPHAEA 1	H (m)	1,5	1,2	0,78	0,2									
NINPHAEA 2		2	1,85	1,6	1,3	0,81	0,1							
NINPHAEA 3		2,38	2,3	2,2	2,07	1,85	1,6	1,26	0,76	0,21				

MODEL	ELECTRICAL DATA		
	POWER INPUT 50 Hz	P1 MAX kW	P2 NOMINAL kW
NINPHAEA 1	1X230 V~	13	10
NINPHAEA 2	1X230 V~	20	15
NINPHAEA 3	1X230 V~	45	35

MODEL	L	P	H	Ø	DNM GAS	CABLE	WEIGHT kg
NINPHAEA 1	20	20	11	¾"	¾"	10 mt.	1
NINPHAEA 2	22	22	12	¾"	¾"	10 mt.	1,5
NINPHAEA 3	24,5	24,5	13	¾"	¾"	10 mt.	1,8

DAB PUMPS reserves the right to make modifications without notice.

NINPHAEA 4/5 - POND AND FOUNTAIN SUBMERSIBLE PUMPS

Liquid temperature range: from 0 °C to +35 °C

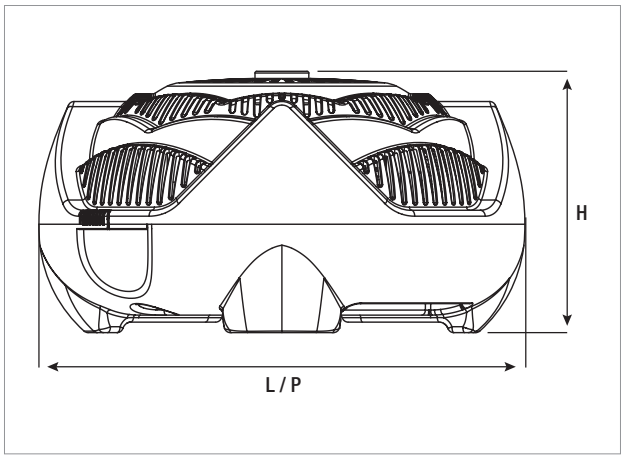

The performance curves are based on kinematic viscosity values = 1 mm²/s and density equal to 1000 kg/m³. Curve tolerance according to ISO 9906.

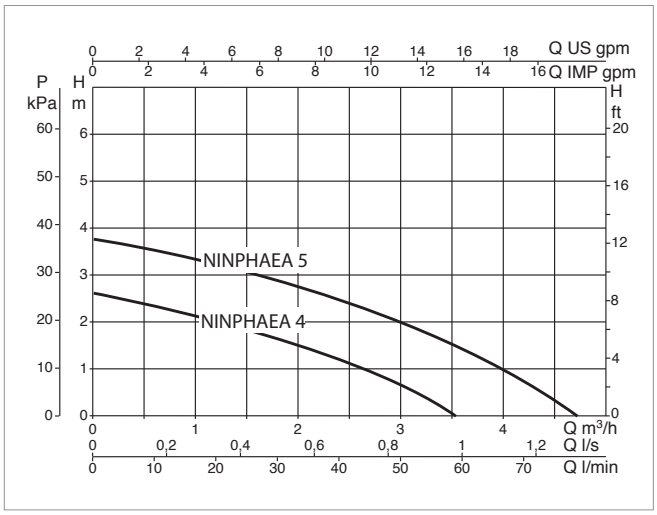

MODEL	Q=m³/h	0	0,2	0,4	0,6	0,9	1,2	1,6	2	2,4	3	3,5	4	4,6
	Q=l/min	0	3	7	10	15	20	27	33	40	50	58	67	77
NINPHAEA 4	H (m)	2,6	2,5	2,4	2,3	2,15	2	1,75	1,47	1,15	0,7	0,1		
NINPHAEA 5		3,76	3,67	3,6	3,5	3,35	3,18	2,98	2,7	2,45	2	1,55	1	0,23

MODEL	ELECTRICAL DATA		
	POWER INPUT 50 Hz	P1 MAX kW	P2 NOMINAL kW
NINPHAEA 4	1X230 V~	75	55
NINPHAEA 5	1X230 V~	95	75

MODEL	L	P	H	Ø	DNM GAS	CABLE	WEIGHT kg
NINPHAEA 4	26,5	26,5	14	¾"	¾"	10 mt.	2,2
NINPHAEA 5	29	29	15	¾"	¾"	10 mt.	2,7

ACCESSORIES

UNION KITS	DESCRIPTION
	2" / DN 50-63 EUROPRO UNION KIT

SUC + DEL COUNTER FLANGE KIT	DESCRIPTION
	EUROPRO HIGH FLOW SUC + DEL COUNTER FLANGE KIT

NOVAPOND WATER FEATURES	DESCRIPTION
	TELESCOPIC TUBE
	3 LEVELS
	FOAM
	FLOWER
	MUSHROOM

TECHNICAL APPENDIX

GENERAL INFORMATION

FUNDAMENTAL TERMS USED IN PUMPS

The following is a list of fundamental terms used in pumps and an explanation of their meanings. Their knowledge is necessary in order to discuss hydraulic pumps. All measurements are given in Technical units. Reference should be made to the chart for their international and Anglo-Saxon equivalents.

HEAD

Head means height, difference in level, gradient. For example if a pump has a flow of Q litres per second and a head of 30 metres, it means that it is capable of raising Q litres of liquid by 30 metres every second (therefore achieving a 30 metre gradient). For each given pump, the head is determined by its construction, such as the external diameter of the impeller and the speed of rotation, but it is not affected by the pumped liquid. This means that the pump as such can raise by 30 metres Q litres per second of water, petrol, mercury, etc.; the only difference in the three cases will be the power of the motor required.

SPECIFIC WEIGHT OF A LIQUID OR FLUID

The specific weight of a liquid or fluid is the weight per unit volume of the liquid/fluid. Specific weight is usually measured in kg/dm^3 or kg/l, remembering that 1 dm^3 equals 1 litre.

PRESSURE

Pressure means weight per unit of area (e.g. kg/cm^2), and it should not be confused with head. In the case of liquids, the pressure that the liquid exerts on a surface is given by the product of the head (or height) of the liquid, multiplied by its specific weight. For this reason, the column of several km of air on the earth's surface produces at sea level a pressure of about 1kg/cm^2 (equal to approx. 1 atmosphere). If the same column were of water rather than air, the pressure would be some 700 to 800 times greater, due to the fact that water has a specific weight approximately 700-800 times greater than that of air.
Bearing in mind that a column of water 10 m high is equivalent to approx. 1 kg/cm^2, if we placed a manometer on the delivery of the pump, the following pressure increases would be measured:

a) with petrol (specific weight 0,7 kg/dm^3) = 00,7 x 0,001 x 30 x 100 = 2,1 kg/cm^2
b) with water (specific weight 1,0 kg/dm^3) = 00,1 x 0,001 x 30 x 100 = 3,0 kg/cm^2
c) with mercury (specific weight 13,6 kg/dm^3) = 13,6 x 0,001 x 30 x 100 = 40,8 kg/cm^2

FLOW

Flow means the quantity of liquid or fluid that passes through a point, such as the delivery outlet of a pump, or a cross section of a pipe, in the set unit of time.
This can be measured in litres per minute (l/min), litres per second (l/s), cubic metres per hour (m^3/h) etc.
It should be noted that there is a perfect analogy between the flow of water through a pipe and the flow of electricity through a wire. It is sufficient to remember that hydraulic head is equivalent to electrical potential or voltage, and hydraulic flow is equivalent to electric current or amperes in electrotechnics. Even their behaviour is the same. Just as a thin wire restricts the flow of electricity more than one with a larger section, in the same way, a pipe of a smaller diameter offers a greater resistance to the flow of a liquid than one of a larger one. Just as the passage of electric current through the wire to a cable needs a voltage difference, in the same way, the flow of a liquid or fluid through a pipe needs a certain head.
There will never be a movement of liquid between two points of a perfectly horizontal pipe, and with the liquid at the same head in both points. This is due to the fact that, in the same way as the cable exerts a certain resistance to the passage of the electric current (electric resistance), the pipe also exerts a certain resistance to the passage of the fluid, the extent of which depends on the quality of the pipe (material, shape, presence of scale) and its section, and therefore the speed at which the fluid runs through the pipe. This resistance is called head loss.

HEAD LOSS

Head loss is that part of the head, possessed by the liquid, which is lost when passing through a pipe, a valve, a filter, etc. This loss cannot be recovered, as it is lost due to friction. Going back to the analogy between electrical and hydraulic phenomena, just as the losses in a cable increase in proportion with the current, so head losses are proportionally greater as the speed of the liquid increases. This means that the more the flow is restricted by scaled pipes, clogged filters, partially closed valves etc. the greater the head loss will be.

PUMP

A pump is a machine used to give a certain head to a liquid that passes through it. The head can be used to raise the liquid to a higher level, or to make it flow inside a pipe, or even in the open air, so that it covers a certain distance. The characteristics of a pump are:

a) **Flow** (the quantity of liquid that is moved through the pump in a unit of time)
b) **Head** (that is the height at which the pump is capable lifting the flow)

Based on the existing relationship between the flow and the head, it is possible to have:

a) Pumps with small flow and large head (piston pumps, rotary pumps, small centrifugal pumps).
b) Pumps with medium flow and medium head (centrifugal pumps in general).
c) Pumps with large flow and small head (helico-centrifugal pumps, propeller pumps).
Centrifugal pumps, helico-centrifugal pumps and propeller pumps have a rotary motion and their speed is universally measured in revolutions per minute

(rpm). With these machines operating at a given speed, for each given value of flow, there is only one value of head. This means that in order to increase or decrease the performance of these types of pumps, the operating speed must be varied accordingly. Basically, the liquid passing through the pump is supplied with energy that is related to the head and the speed of the liquid itself. This energy supplied within the unit of time is known as delivered power.

DELIVERED POWER

The delivered power is the power delivered by the pump to the liquid. The value of this delivered power depends on three factors: flow, head, and specific weight of the pumped liquid. The higher these three factors, the higher is the power delivered by the pump. For example, a pump delivering petrol does less work than when delivering sulphuric acid, because the specific weights of the two liquids are different.
In order to pump a liquid, a pump must be driven by a motor. In the vast majority of cases, this is either an electric, or an internal combustion motor. Electric motors use electric power, while internal combustion motors (engines) use oil or oil derivative fuels. The power that the pump needs in order to operate is called absorbed power.

DELIVERED POWER CALCULATION

Delivered power is normally expressed in kW or HP, indicating with:
Q = the flow
H = the head in metres of the column of liquid (m.c.l.)
γ = the specific weight of the liquid

The delivered power (P3) is calculated using one of the following equations:

$$P3 = \frac{\gamma\ (kg/dm^3) \times Q\ (l/s) \times H\ (m.c.l.)}{75} \text{ in HP}$$

$$P3 = \frac{\gamma\ (kg/dm^3) \times Q\ (m^3/h) \times H\ (m.c.l.)}{270} \text{ in HP}$$

$$P3 = \frac{\gamma\ (kg/dm^3) \times Q\ (l/s) \times H\ (m.c.l.)}{102} \text{ in kW}$$

$$P3 = \frac{\gamma\ (kg/dm^3) \times Q\ (l/min) \times H\ (m.c.l.)}{4500} \text{ in HP}$$

$$P3 = \frac{\gamma\ (kg/dm^3) \times Q\ (m^3/h) \times H\ (m.c.l.)}{367} \text{ in kW}$$

$$P3 = \frac{\gamma\ (kg/dm^3) \times Q\ (l/min) \times H\ (m.c.l.)}{6120} \text{ in kW}$$

ABSORBED POWER

Absorbed power is the power that the pump absorbs from the motor, to give to the liquid the delivered power discussed above.
Not all the absorbed power becomes delivered power, as some power is lost through friction, and even more within the pump itself, due to hydraulic losses. It is therefore clear that the delivered power is always less than the absorbed power, and the relation between the two is a number always lower than 1. This number is known as the efficiency.

YIELD

The efficiency is obtained by dividing the delivered power by the absorbed power, and is normally expressed as a percentage. For example, an efficiency of 75 % of a pump indicates that only 75 % of the absorbed power is converted into delivered power, with the remaining 25 % being lost due to friction. Therefore, the higher the efficiency of a pump, the smaller the portion of absorbed power being lost. If one then considers that the cost of energy relates to the absorbed power, it immediately becomes apparent just how important efficiency is. If we compare two pumps with the same 1 HP delivered power, but with an efficiency of 50 % for the first, and 60 % for the second, we can assume that the first one will need 2 HP to supply 1, while the second will only need 1,67 HP to achieve the same result. This means that the efficiency of a pump expresses, better than any other parameter, the quality of the pump and the related savings in terms of operating costs.

CALCULATION OF POWER OUTPUTS

P_1: is the power absorbed by the motor in kW (generally indicated by the wattmeter).
P_2: the power delivered by the motor in kW. This is measured at the brake (it basically is the power absorbed by the pump).
P_3: the power delivered by the pump in kW.

Power output of the motor $\eta = \frac{P_2}{P_1}$

Power output of the motor $\eta = \frac{P_3}{P_2}$

Power output of the motor $\eta = \frac{P_3}{P_1}$

THE HEAD OF A PUMP AND ITS MEASUREMENT

The head of a pump is always the differential head, or that given by the pump itself. This is generally expressed in metres. In order to ascertain the head of a surface pump, during its operation it is necessary to measure the value of the head both at the suction and at the delivery of the pump itself, making sure that the readings are taken at the same level, which is called the reference plane. Two cases are possible, depending on installation:

1) the value of the head at the suction is negative (i.e. below zero shown on the manometer): in this case, the level of the liquid collected is lower than the level of the suction inlet.

2) the value of the head at the suction is positive (i.e. above zero shown on the manometer) in this case, the level of the liquid collected is higher than the level of the suction inlet (flooded suction).

In the first case the head of the pump is given by the sum of the two readings, while in the second it is given by subtracting the value of the head at the suction inlet from the value at the delivery outlet.
Finally, it is necessary to make sure that the readings at the suction and the delivery have been taken from apertures of the same diameter, so that they are not distorted by a difference in the speed of the liquid at the point of measurement. Any correction is made by calculating the dynamic head, or that part of the head linked with the speed of the liquid, which means that part of the head that the liquid possesses at the measuring section, due to the fact that it is moving. The dynamic head Hd, expressed in metres, is calculated using the following formula:

$$Hd = \frac{v^2}{2g}$$

where: v = speed of the fluid at the measuring point, given in m/s
g = acceleration of gravity (9,81), expressed in m/s^2
$2g = 2 \times 9{,}81 = 19{,}62\ m/s^2$

The correction of the head is given by the difference between the dynamic head at the delivery, and the dynamic head at the suction. It is therefore clear that if the readings upstream and downstream the pump have been taken on pipes of the same diameter, and therefore with the liquid flowing at the same speed, the correction is zero.

In order to ascertain the head of a submerged impeller pump, it is sufficient, during operation, to measure the head at the delivery port. In this case, the head of the pump is given by adding the value read to the dynamic head (always at the delivery port), and to the difference of level between the free surface of the liquid collected and the manometer.

VARIATION IN PUMP HEAD IN RELATION TO SPEED VARIATION

The performance of a pump is directly connected to its speed in rpm (**n**). Providing that there is no cavitation, the law of similarity may be used, which is expressed as follows:

$$Q_x = Q \times \frac{n_x}{n} \qquad H_x = H \times \left(\frac{n_x}{n}\right)^2 \qquad P_{2\text{-}x} = P_2 \times \left(\frac{n_x}{n}\right)^3$$

For example, when doubling the number of revolutions (n_x) one obtains:
Q_x = the value of the flow doubles
H_x = the value of the head is 4 times higher
$P_{2\text{-}x}$ = the value of the absorbed power is 8 times higher

Q - H - P2 are the values at speed **n**
Q_x - H_x - $P_{2\text{-}x}$ are the values at speed n_x.

DAB PUMPS reserves the right to make modifications without notice.

NOTES ON THE MOTORS OF ELECTRIC PUMPS

INDEX OF SYMBOLS USED
P_1 : POWER ABSORBED BY THE MOTOR IN kW.
P_2 : POWER DELIVERED BY THE MOTOR IN kW OR HP.
V ~ = AC POWER INPUT VOLTAGE AT THE MAINS.
Hz = FREQUENCY IN CYCLES PER SECOND OF THE POWER INPUT VOLTAGE.
I = CURRENT ABSORBED BY THE MOTOR IN AMPERES.
cosφ = POWER FACTOR.
$n^{1/min}$ = SPEED OF ROTATION IN RPM.
η = OUTPUT POWER (RELATION BETWEEN DEVELOPED POWER AND ABSORBED POWER P2/P1).
p = NUMBER OF POLES OF THE MOTOR.
Cn = NOMINAL TORQUE OF THE MOTOR.

NO-LOAD SPEED OF ROTATION

The no-load speed of single-phase and three-phase electric induction motors is given by the formula:

$$n^{1/min} = \frac{120 \times Hz}{p}$$

No-load speed of rotation $n^{1/min}$

FREQUENCY Hz	2 POLES	4 POLES
50	3000	1500
60	3600	1800

The full-load speed is 2 to 7 % lower than the no-load speed (2 to 7 % sliding).

CURRENT ABSORBED

Single-phase: $I = \frac{1000 \times P_2\,(kW)}{V \times \cos\varphi \times \eta}$ or: $I = \frac{736 \times P_2\,(HP)}{V \times \cos\varphi \times \eta}$

Three-phase: $I = \frac{1000 \times P_2\,(kW)}{1.73 \times V \times \cos\varphi \times \eta}$ or: $I = \frac{736 \times P_2\,(HP)}{1.73 \times V \times \cos\varphi \times \eta}$

ABSORBED POWER

Single-phase: $P_1\,(kW) = \frac{V \times I \times \cos\varphi}{1000}$

Three-phase: $P_1\,(kW) = \frac{1.73 \times V \times I \times \cos\varphi}{1000}$

POWER DELIVERED AT THE MOTOR AXIS

Single-phase: $P_2\,(kW) = \frac{V \times I \times \cos\varphi \times \eta}{1000}$ or: $P_2\,(HP) = \frac{V \times I \times \cos\varphi \times \eta}{736}$

Three-phase: $P_2\,(kW) = \frac{1{,}73 \times V \times I \times \cos\varphi \times \eta}{1000}$ or: $P_2\,(HP) = \frac{1{,}73 \times V \times I \times \cos\varphi \times \eta}{736}$

YIELD

$$\eta = \frac{P_2\,(kW)}{P_1\,(kW)}$$

DAB PUMPS reserves the right to make modifications without notice.

POWER FACTOR

Single-phase: $\cos\varphi = \dfrac{P_2\,(kW) \times 1000}{V \times I \times \eta}$ or: $\cos\varphi = \dfrac{P_1\,(kW) \times 1000}{V \times I}$

Three-phase: $\cos\varphi = \dfrac{P_2\,(kW) \times 1000}{1{,}73 \times V \times I \times \eta}$ or: $\cos\varphi = \dfrac{P_1\,(kW) \times 1000}{1{,}73 \times V \times I}$

TORQUE FACTOR

$Cn = \dfrac{P_2\,(kW) \times 1000}{1.027 \times \mathbf{n}^{1/min}}$ in kgm

$Cn = \dfrac{P_2\,(HP) \times 736}{1.027 \times \mathbf{n}^{1/min}}$ in kgm

$Cn = \dfrac{702 \times HP}{\mathbf{n}^{1/min}}$ in decaNewtonmetres

RELATIONSHIP BETWEEN KW AND HP

1 HP = 0,736 kW 1 kW = 1,36 HP $\dfrac{HP}{1.36} = kW$ kW x 1,36 = HP

STARTING CURRENT (ISP)

The starting current (at switch on) of a motor is 4 to 8 times greater than the nominal current, depending on the power of the motor.
Isp = In x 4 ÷ 8

DETAILS ON CAPACITORS

The approximate current absorbed by a capacitor is:

$$I = \frac{6{,}28 \times F \times C \times V}{1.000.000}$$

Where:
I = current in Amps absorbed by the capacitor.
F = frequency in Hz of the applied voltage.
C = capacity of capacitor µF.
V = applied voltage.

Example:
The current absorbed by a 14 µF capacitor connected to a 220 Volt - 50 Hz power input is:

$$I = \frac{6{,}28 \times 50 \times 14 \times 220}{1.000.000} = 0{,}96 \text{ Amperes}$$

The approximate capacity of a capacitor is determined by:

$$C = \frac{I}{6{,}28 \times F \times V} \times 1{,}000{,}000$$

Example:
The capacity of a capacitor absorbing 1,4 Amps connected to a 220 Volt - 50 Hz power input is:

$$C = \frac{1{,}4}{6{,}28 \times 50 \times 220} \times 1{,}000{,}000 = 20{,}2\ \mu F$$

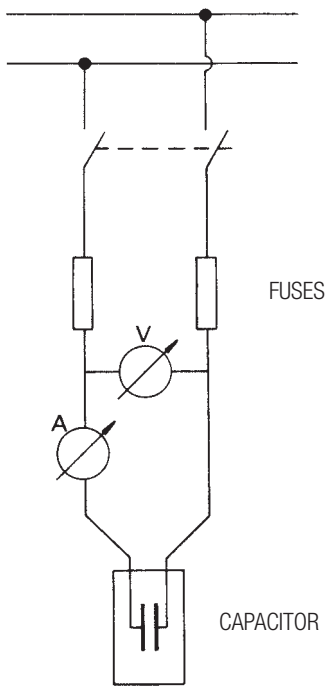

STAR-DELTA START-UP

The normally delta Δ connected motor is connected to the network using a star type connection. The current and the starting torque are both reduced to 1/3 of the value they would be if delta Δ connected.

PROTECTION

It is recommended that motors are connected to the power input network using appropriate three-fuse thermal magnetic circuit breakers, or in any case circuit breakers complying with current local regulations.

LOAD LOSS AND SPEED TABLE

In order to accurately calculate **load losses and speed**, the following table is used:

FLOW			NEW GALVANISED PIPING									
			NOMINAL DIAMETERS: INCHES AND MM									
l/s	l/min	m³/h	1/2"	3/4"	1"	1"1/4	1"1/2	2"	2"1/2	3"	3"1/2	4"
			15,75	21,25	27	35,75	41,25	52,5	68	80,25	92,5	105
0,17	10	0,6	0,856	0,47	0,291							
			9,01	20,9	0,65				HAZEN WILLIAMS CALCULATION FORMULA (UNI 9489 13.3.3.6)			
0,25	15	0,9	1,284	0,705	0,4387	0,249						
			19,07	4,43	1,38	0,35						
0,33	20	1,2	1,712	0,94	0,582	0,332	0,25					
			32,47	7,55	2,35	0,6	0,3					
0,42	25	1,5	2,14	1,175	0,728	0,415	0,31					
			49,06	11,41	3,55	0,91	0,45					
0,5	30	1,8	2,568	1,411	0,874	0,498	0,37	0,23				
			68,74	15,98	4,98	1,27	0,63	0,2				
0,58	35	2,1	2,996	1,646	1,019	0,581	0,44	0,27				
			91,42	21,26	6,62	1,69	0,84	0,26				
0,67	40	2,4		1,881	1,165	0,664	0,5	0,31				
				27,22	8,48	2,16	1,08	0,33				
0,83	50	3		2,351	1,456	0,831	0,62	0,39	0,23			
				41,13	12,81	3,27	1,63	0,5	0,14			
1	60	3,6		2,821	1,747	0,997	0,75	0,46	0,28			
				57,63	17,95	4,58	2,28	0,7	0,2			
1,17	70	4,2		3,291	2,039	1,163	0,87	0,54	0,32	0,23		
				76,64	23,88	6,08	3,03	0,94	0,27	0,12		
1,33	80	4,8			2,33	1,329	1	0,62	0,37	0,26		
					30,57	7,79	3,88	1,2	34	0,15		
1,5	90	5,4			2,621	1,495	1,12	0,69	0,41	0,3		
					38,01	9,69	4,83	1,49	0,42	0,19		
1,67	100	6			2,912	1,661	1,25	0,77	0,46	0,33	0,25	
					46,19	11,77	5,86	1,81	0,51	0,23	0,11	
2,08	125	7,5			3,641	2,077	1,56	0,96	0,57	0,41	0,31	0,24
					69,79	17,79	8,86	2,74	0,78	0,35	0,17	0,09
2,5	150	9				2,492	1,87	1,16	0,69	0,49	0,37	0,29
						24,92	12,41	3,84	1,09	0,49	0,24	0,13
2,92	175	10,5				2,907	2,18	1,35	0,8	0,58	0,43	0,34
						33,15	16,51	5,1	1,45	0,65	0,32	0,17

White numbers: Load losses in m. for every 100 m of pipework

Green numbers: Water speed in m/sec

The table refers to galvanised pipework.

For other materials multiply as follows:
- 0,6 PVC pipes.
- 0,7 aluminium pipes.
- 0,8 laminated steel and stainless steel.

DAB PUMPS reserves the right to make modifications without notice.

LOAD LOSS AND SPEED TABLE

In order to accurately calculate **load losses and speed**, the following table is used:

FLOW			NEW GALVANISED PIPING									
			NOMINAL DIAMETERS: INCHES AND MM									
l/s	l/min	m³/h	1"1/4	1"1/2	2"	2"1/2	3"	3"1/2	4"	5"	6"	8"
			35,75	41,25	52,5	68	80,25	92,5	105	130	155	206
3,33	200	12	3,322	2,5	1,54	0,92	0,66	0,5	0,39	0,25		
			42,43	21,14	6,53	1,85	0,83	0,41	**0,22**	**0,08**		
4,17	250	15	4,156	3,12	1,93	1,15	0,82	0,62	**0,48**	**0,31**		
			64,12	31,94	9,87	2,8	1,25	1,63	**0,34**	**0,12**		
5	300	18		3,74	2,31	1,38	0,99	0,74	**0,58**	**0,38**	**0,27**	
				44,75	13,83	3,92	1,75	0,88	0,47	0,17	0,07	
6,67	400	24		4,99	3,08	1,84	1,32	0,99	0,77	0,5	0,35	
				76,2	23,55	6,68	2,98	1,49	0,8	0,28	0,12	
8,33	500	30			3,85	2,3	1,65	1,24	0,96	0,63	0,44	
					35,58	10,09	4,51	2,26	1,22	0,43	0,18	
10	600	36			4,62	2,75	1,98	1,49	1,16	0,75	0,53	0,3
					49,85	14,14	6,31	3,16	1,7	0,6	0,26	0,06
11,67	700	42				3,21	2,31	1,74	1,35	0,88	0,62	0,35
						18,81	8,4	4,2	2,27	0,8	0,34	0,09
13,33	800	48				3,67	2,64	1,99	1,54	1,01	0,71	0,4
						24,08	10,75	5,38	2,9	1,03	0,44	0,11
15	900	54				4,13	2,97	2,23	1,73	1,13	0,8	0,45
						29,94	13,37	6,69	3,61	1,28	0,54	0,14
16,67	1000	60				4,59	3,3	2,48	1,93	1,26	0,88	0,5
						36,39	16,24	8,13	4,39	1,55	0,66	0,16
20,83	1250	75					4,12	3,1	2,41	1,57	1,1	0,63
							24,54	12,29	6,63	2,34	0,99	0,25
25	1500	90					4,95	3,72	2,89	1,88	1,33	0,75
							34,39	17,22	9,29	3,28	1,39	0,35
29,17	1750	105						4,34	3,37	2,2	1,55	0,88
								22,9	12,35	4,37	1,85	0,46
33,33	2000	120						4,96	3,85	2,5	1,77	1
								29,31	15,81	5,59	2,37	0,59
41,67	2500	150							4,81	3,14	2,21	1,25
									23,89	8,44	3,59	0,9
50	3000	180		HAZEN WILLIAMS CALCULATION FORMULA (UNI 9489 13.3.3.6)						3,77	2,65	1,5
										11,83	5,02	1,26
66,67	4000	240								5,03	3,53	2
										20,15	8,55	2,14
83,33	5000	300									4,42	2,5
											12,93	3,23

White numbers: Load losses in m. for every 100 m of pipework

Green numbers: Water speed in m/sec.

The table refers to galvanised pipework.

For other materials multiply as follows:
- 0,6 PVC pipes.
- 0,7 aluminium pipes.
- 0,8 laminated steel and stainless steel.

DAB PUMPS reserves the right to make modifications without notice.

HEAD LOSS

in cm of column of water in bends, gate valves, and foot valves

VELOCITY OF WATER IN m/s	SHARP EDGED BENDS					NORMAL BENDS					GATE VALVE	FOOT VALVE	NON-RETURN VALVE	HEAD LOSS ON EXIT FROM PIPES $V^2/2G$
	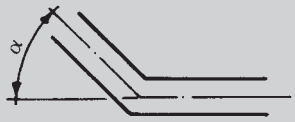					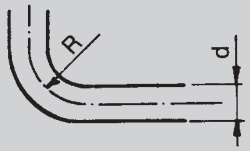								
	$\alpha = 30°$	$\alpha = 40°$	$\alpha = 60°$	$\alpha = 80°$	$\alpha = 90°$	$\frac{d}{R} = 0,4$	$\frac{d}{R} = 0,6$	$\frac{d}{R} = 0,8$	$\frac{d}{R} = 1$	$\frac{d}{R} = 1,5$				
0,10	0,03	0,04	0,05	0,07	008	0,07	0,08	0,01	0,0155	0,027	0,03	30	30	0,05
0,15	0,06	0,73	0,1	0,14	0.17	0,016	0,019	0,024	0,033	0,06	0,033	31	31	0,12
0,2	0,11	0,13	0,18	0,26	0.31	0,028	0,033	0,04	0,059	0,11	0,058	31	31	0,21
0,25	0,17	0,21	0,28	0,4	0.48	0,044	0,052	0,063	0,091	0,17	0,09	31	31	0,32
0,3	0,25	0,3	0,41	0,6	0.7	0,063	0,074	0,09	0,13	0,25	0,13	31	31	0,46
0,35	0,33	0,4	0,54	0,8	0.93	0,085	0,10	0,12	0,18	0,33	0,18	31	31	0,62
0,14	0,43	0,52	0,71	1,0	1.2	0,11	0,13	0,16	0,23	0,43	0,23	32	31	0,82
0,5	0,67	0,81	1,1	1,6	1.9	0,18	0,21	0,26	0,37	0,67	0,37	33	32	1,27
0,6	0,97	1,2	1,6	2,3	2.8	0,25	0,29	0,36	0,52	0,97	0,52	34	32	1,84
0,7	1,35	1,65	2,2	3,2	3.9	0,34	0,40	0,48	0,70	1,35	0,7	35	32	2,5
0,8	1,7	2,1	2,8	4,0	4.8	0,45	0,53	0,64	0,93	1,7	0,95	36	33	3,3
0,9	2,2	2,7	6	5,2	6.2	0,57	0,67	0,82	1,18	2,2	1,2	37	34	4,2
1,0	2,7	3,3	4,5	6,4	7.6	0,7	0,82	1,0	1,45	2,7	1,45	38	35	5,1
1,5	6,0	7,3	10,0	14,0	17.0	1,6	1,9	2,3	3,3	6,0	3,3	47	40	11,5
2,0	11,0	14,0	18,0	26,0	31.0	2,8	3,3	4,0	5,8	11,0	5,8	61	48	20,4
2,5	17,0	21,0	28,0	40,0	48.0	4,4	5,2	6,3	9,1	17,0	9,1	78	58	32,0
3,0	25,0	30,0	41,0	60,0	70.0	6,3	7,4	9,0	13,0	25,0	13,0	100	71	46,0
3,5	33,0	40,0	55,0	78,0	93.0	8,5	10,0	12,0	18,0	33,0	18,0	123	85	62,0
4,0	43,0	52,0	70,0	100,0	120.0	11,0	13,0	16,0	23,0	42,0	23,0	150	100	82,0
4,5	55,0	67,0	90,0	130,0	160.0	14,0	21,0	26,0	37,0	55,0	37,0	190	120	103,0
5,0	67,0	82,0	110,0	160,0	190.0	18,0	29,0	36,0	52,0	67,0	52,0	220	140	127,0

v = velocity of water in metres per second
d = diameter of pipes in m metres
h = head loss in cm of water column for each metre of pipework, calculated according to the Lang formula:

$$h = \lambda \times \frac{100}{d} \times \frac{v^2}{2g} \qquad \lambda = 0,02 + \frac{0,0018}{\sqrt{v \times d}}$$

The only loss in bends is that due to the contraction of the liquid stream when changing direction (the development of the curves must therefore be included in the length of the pipework); the head loss for gate valves has been determined through technical tests.
The head loss for gate valves and normal bends is equal to that of 5 m of straight pipework, while that of non-return valves is equal to 15 m.
The values given are for pipes with a completely smooth internal surface. In case of rough or scaled pipes, allowances must be made accordingly.

VAPOUR TENSION AND SPECIFIC WEIGHT OF WATER AS A FUNCTION OF TEMPERATURE

VAPOUR TENSION (pV)

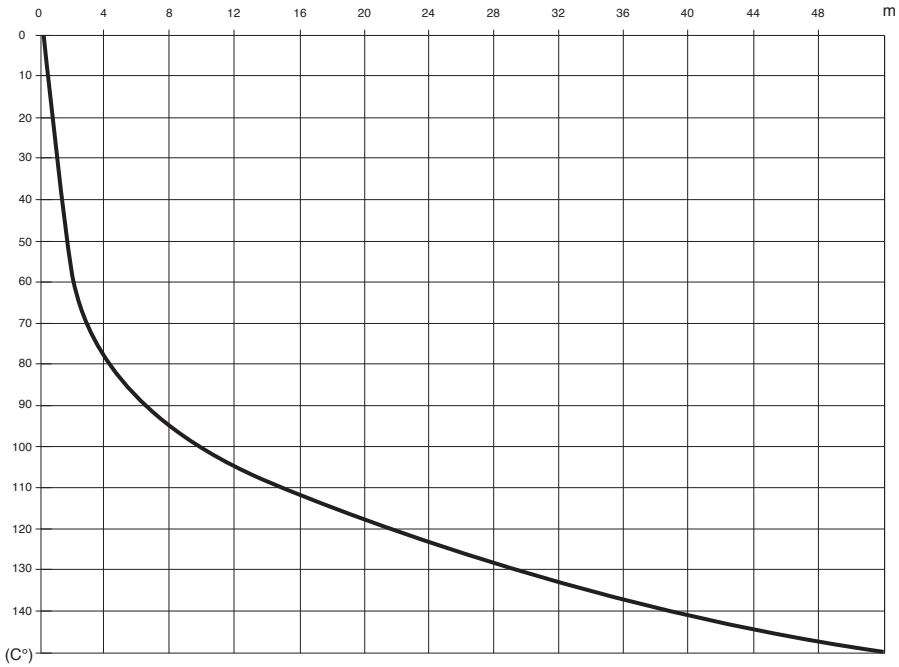

C°	m
10	0,121
20	0,22
30	0,387
40	0,675
50	1,147
60	1,888
70	3,014
80	4,67
90	7,035
100	10,33
110	14,83
120	20,85
130	28,744
140	38,97
150	52

$$\frac{Pb}{Y\,4°} - \frac{(Pb-Pv)}{Y\,t}$$

Pb and Pv in mCA

ATMOSPHERIC PRESSURE (pb)

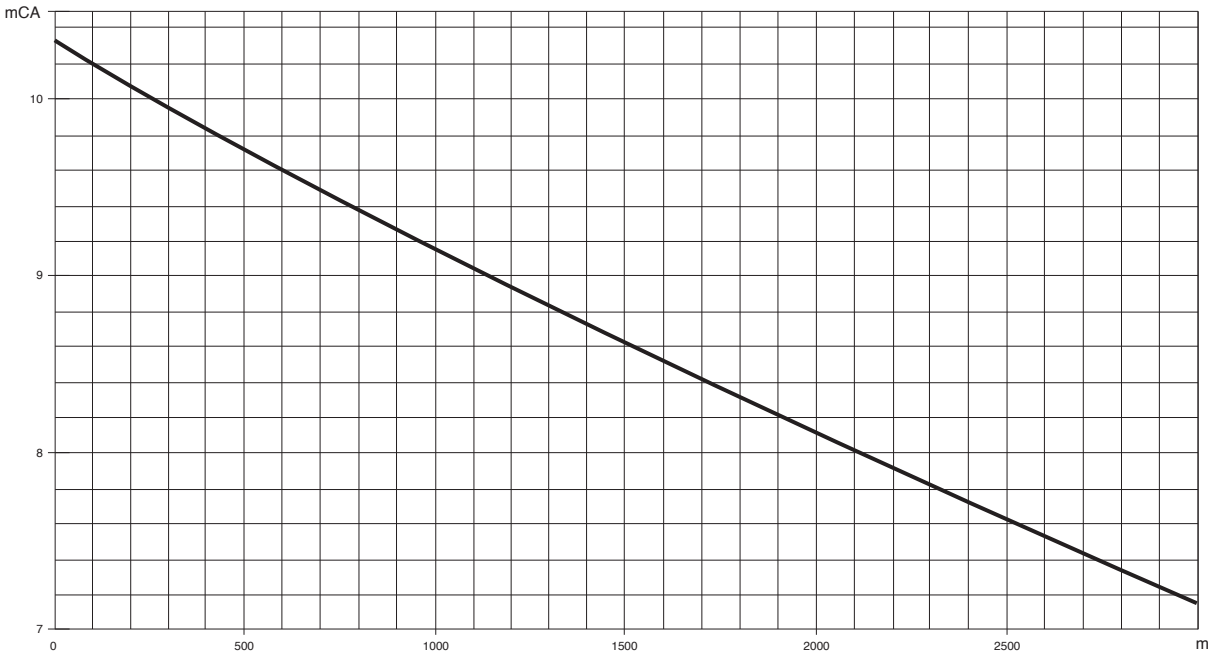

DAB PUMPS reserves the right to make modifications without notice.

CONVERSION TABLE FOR UNITS OF MEASURE

CHARACTERISTIC	SYSTEM UNIT OF MEASURE	UNIT OF MEASURE	SYMBOL	CONVERSIONS		
				SYSTEM	INTERNATIONAL SYSTEM (SI)	IMPERIAL SYSTEM
LENGTH	Technical and International	metre decimetre centimetre millimetre	m dm cm mm	1 dm = 0,1 m 1 cm = 0,01 m 1 mm = 0,001 m		1 m = 3,28 ft 1 dm = 3,937 in 1 cm = 0,3937 in
	Imperial	inch foot yard	1", in 1", ft yd	1" = 25,4 mm 1" ft = 0,3048 m 1 yd = 0,9144 m		1 ft = 12" 1 yd = 3 ft = 26"
AREA	Technical and International	metres squared centimetres squared millimetres squared	m^2 cm^2 mm^2	1cm2 = 0,0001 m^2 1 mm2 = 0,01 cm^2		1m^2 = 1,196 sq.yd 1m^2 = 10,764 sq.ft 1 cm^2 = 0,155 sq.in
	Imperial	square inch square foot square yard	sq.in sq.ft sq.yd	1 sq.in = 6,45 cm^2 1 sq.ft = 0,0929 m^2 1 sq.yd = 0,836 m^2		1 sq.ft = 144 sq.in 1 sq.yd = 1,296 sq.in 1 sq.yd = 9 sq.ft
VOLUME	Technical and International	metre cubed decimetre cubed centimetre cubed litre cubed	m^3 cm^3 mm^3 l	1 m^3 = 1.000 dm^3 1 cm^3 = 0.001 m = 1.000 cm^3 1 mm^3 = 0.001 dm^3 1 l = dm^3		1 dm^3 = 0,22 Imp.gal 1 dm^3 = 0,264 US.gal 1 dm^3 = 61,0 cu.in
	Imperial	cubic inch cubic feet Imperial gallons U.S. gallons	cu.in cu.ft Imp.gal USA.gal	1 cu.in = 16,39 cm^3 1 cu.ft = 28,34 m^3 1 Imp.gal = 4,546 m^3 1 US.gal = 3,785 dm^3		1 Imp.gal = 1,201 US.gal 1 US.gal = 0,833 Imp.gal
TEMPERATURE	Technical and International	degrees Centigrade degrees Kelvin	°C °K	°C = °K-273 °K = °C + 273		°C = 5/9 x (°F - 32) °K = 5/9 x (°F - 32) + 273
	Imperial	degrees Fahrenheit	°F	°F = 9/5 x °C + 32		–
	freezing point of water at atmospheric pressure: boiling point of water at atmospheric pressure:			000°C = 273 °K = 032 °F 100°C = 373 °K = 212 °F		
WEIGHT and FORCE	Technical	kilogram	kg	–	1 kg = 9,81 N	1 kg = 2,203 lb
	International	Newton	N	1 N = 0,102 kg	–	1 N = 0,22546 lb
	Imperial	pound	lb	1 lB = 0,454 kg	1 lb = 4,452 N	–
SPECIFIC WEIGHT	Technical	kilogram per decimetre cubed	kg/dm^3	–	1 kg/dm^3 = 9,807 N/dm^3	1 kg/dm^3 = 62,46 lb/cu.ft
	International	Newton per decimetre cubed	N/dm^3	1 N/dm^3 = 0,102 kg/dm^3	–	1 N/dm^3 = 6,36 lb/cu.ft
	Imperial	pound per cubic foot	lb/dm^3	1 lb/cu.ft = 0,01600 kg/dm^3	1 lb/cu.ft = 0,160 N/dm^3	–
PRESSURE	Technical	atmospheres	kg/cm^2	–	1 kg/cm^2 = 98,067 kPa 1 kg/cm^2 = 0,9807 bar	1 kg/cm^2 = 14,22 psi
	International	Pascal kiloPascal bar	Pa kPa bar	1 kPa = 0,0102 kg/cm^2 1 bar = 1,02 kg/cm^2	1 kPa = 1.000 Pa 1 bar = 100.000 Pa	1 kPa = 0,145 psi 1 bar = 14,50 psi
	Imperial	pound per square inch	psi	1 psi = 0,0703 kg/cm^2	1 psi = 0,06895 bar 1 psi = 6,894 kPa	–
FLOW	Technical	litres per minute litres per second metres cubed per hour	l/min l/s m^3/h	1 l/min = 0,0167 l/s 1 l/s = 3,6 m^3/h 1 m^3/h = 16,667 l/min	1 l/s = 0,001 m^3/s	1 l/min = 0,22 imp.g.p.m. 1 l/min = 0,264 US.g.p.m. 1 m^3/h = 3,666 imp.g.p.m. 1 m^3/h = 4,403 US.g.p.m.
	International	metres cubed per second	m^3/s	1 m^3/s = 1.000 l/s 1 m^3/s = 3.600 m^3/h	–	1 m^3/s = 13.198 imp.g.p.m. 1 m^3/s = 15.852 US.g.p.m.
	Imperial	imperial gallons per minute U.S. gallons per minute	Imp.g.p.m. US.g.p.m.	1 Imp.g.p.m. = 4,546 l/min 1 Imp.g.p.m. = 0,273 m^3/h 1 US.g.p.m. = 3,785 l/min 1 US.g.p.m. = 0,227 m^3/h	–	1 Imp.g.p.m. = 1,201 US.g.p.m. 1 US.g.p.m. = 0,833 Imp.g.p.m.
TORQUE	Technical	kilogram metre	kgm	–	1 kgm = 9,807 Nm	1 kgm = 7,233 ft.lb
	International	Newton metre	Nm	1 Nm = 0,102 kgm	–	1 Nm = 0,7376 ft.lb
	Imperial	foot pound	ft.lb	1 ft.lb = 0,138 kgm	1 ft.lb = 1,358 Nm	–
WORK and ENERGY	Technical	kilogram metre vapour-horsepower hour	kgm CVh		1 kgm = 9,807 J 1 CVh = 0,736 kWh	1 kgm = 7,233 ft.lb 1 Nm = 0,986 HP.hr.
	International	Joule kiloWatt hour	J kWhq	1 J = 0,102 kgm kWh = 1,36 CVh	–	1 Nm = 0,7376 ft.lb 1 Nm = 0,7376 ft.lb
	Imperial	foot pound Horsepower hour	ft.lb HP.hr.	1 ft.lb = 0,138 kgm 1 HP.hr. = 1,014 CVh	1 ft.lb = 0,358 Nm 1 HP.hr. = 0,746 kWh	–
POWER	Technical	Horse power	HP	1 HP = 0,736 kW	1 HP = 736 W	–
	International	Watt kiloWatt	W kW	1 W = 0,00136 Hp 1 kW = 1,36 Hp	1 kW = 1.000 W	–
KINETIC VISCOSITY	Technical	stokes centistokes	1 St 1 cSt	1 St = 1 cm^2/s 1 cSt = 0,01 St	1 St = 0.0001 m^2/s	1 St = 0.00107 ft^2/s
	International	m^2/s	m^2/s	1 m^2/s = 10.000 St	1 m^2/s = 10.000 cm^2/s	1 m^2/s = 10.764 ft^2/s
	Imperial	square foot per second	ft^2/s	1 ft^2/s = 929 St	1 ft^2/s = 0.0929 m^2/s	–

NOTES

DAB PUMPS reserves the right to make modifications without notice.

Via Marco Polo, 14 - 35035 Mestrino (PD) Italy - Tel. +39.049.5125000 - Fax +39.049.5125950
www.dabpumps.com

DNA® PUMPS SELECTOR

On-line product selection

DAB PUMPS LTD.
Unit 4 and 5, Stortford Hall Industrial Park,
Dunmow Road,
Bishops Stortford,
Herts
CM23 5GZ - UK
salesuk@dwtgroup.com
Tel. +44 1279 652 776
Fax +44 1279 657 727

DAB PUMPS B.V.
Brusselstraat 150
B-1702 Groot-Bijgaarden - Belgium
info.belgium@dwtgroup.com
Tel. +32 2 4668353
Fax +32 2 4669218

DAB PUMPS B.V.
Albert Einsteinweg, 4
5151 DL Drunen - Nederland
info.netherlands@dwtgroup.com
Tel. +31 416 387280
Fax +31 416 387299

DAB PUMPEN DEUTSCHLAND GmbH
Tackweg 11
D - 47918 Tönisvorst - Germany
info.germany@dwtgroup.com
Tel. +49 2151 82136-0
Fax +49 2151 82136-36

DAB PUMPS IBERICA S.L.
Avenida de Castilla nr.1 Local 14
28830 - San Fernando De Henares - Madrid
Spain
info.spain@dwtgroup.com
Tel. +34 91 6569545
Fax: +34 91 6569676

DAB PRODUCTION HUNGARY KFT.
H-8800
Nagykanizsa, Buda Ernó u.5
Hungary
Tel. +36 93501700

DAB PUMPS POLAND Sp. z o.o.
Mokotow Marynarska
ul. Postępu 15C
02-676 Warszawa - Poland
Tel. +48 223 81 6085

DAB UKRAINE Representative Office
Regus Horizon Park
4 M. Hrinchenka St, suit 147
03680 Kiev - Ukraine
Tel. +38 044 391 59 43

OOO DAB PUMPS
Novgorodskaya str, 1, bld G, office 308
127247 Moscow - Russia
info.russia@dwtgroup.com
Tel. +7 495 122 00 35
Fax +7 495 122 00 36

DAB PUMPS INC.
3226 Benchmark Drive
Ladson, SC 29456 - USA
info.usa@dwtgroup.com
Tel. 1-843-824-6332
Toll Free 1-866-896-4DAB (4322)
Fax 1-843-797-3366

DWT SOUTH AFRICA
Podium at Menlyn,
3rd Floor, Unit 3001b, 43 Ingersol Road,
C/O Lois and Atterbury street,
Menlyn, Pretoria, 0181 - South-Africa
info.sa@dwtgroup.com
Tel. +27 12 361 3997
Fax +27 12 361 3137

DAB PUMPS CHINA
No.40 Kaituo Road, Qingdao Economic & Technological
Development Zone
Qingdao City, Shandong Province - China
PC: 266500
info.china@dwtgroup.com
Tel. +8653286812030-6270
Fax +8653286812210

DAB PUMPS DE MÉXICO, S.A. DE C.V.
Av Gral Álvaro Obregón 270, oficina 355
Hipódromo, Cuauhtémoc 06100
México, D.F.
Tel. +52 55 6719 0493

60171431 - 05/2015