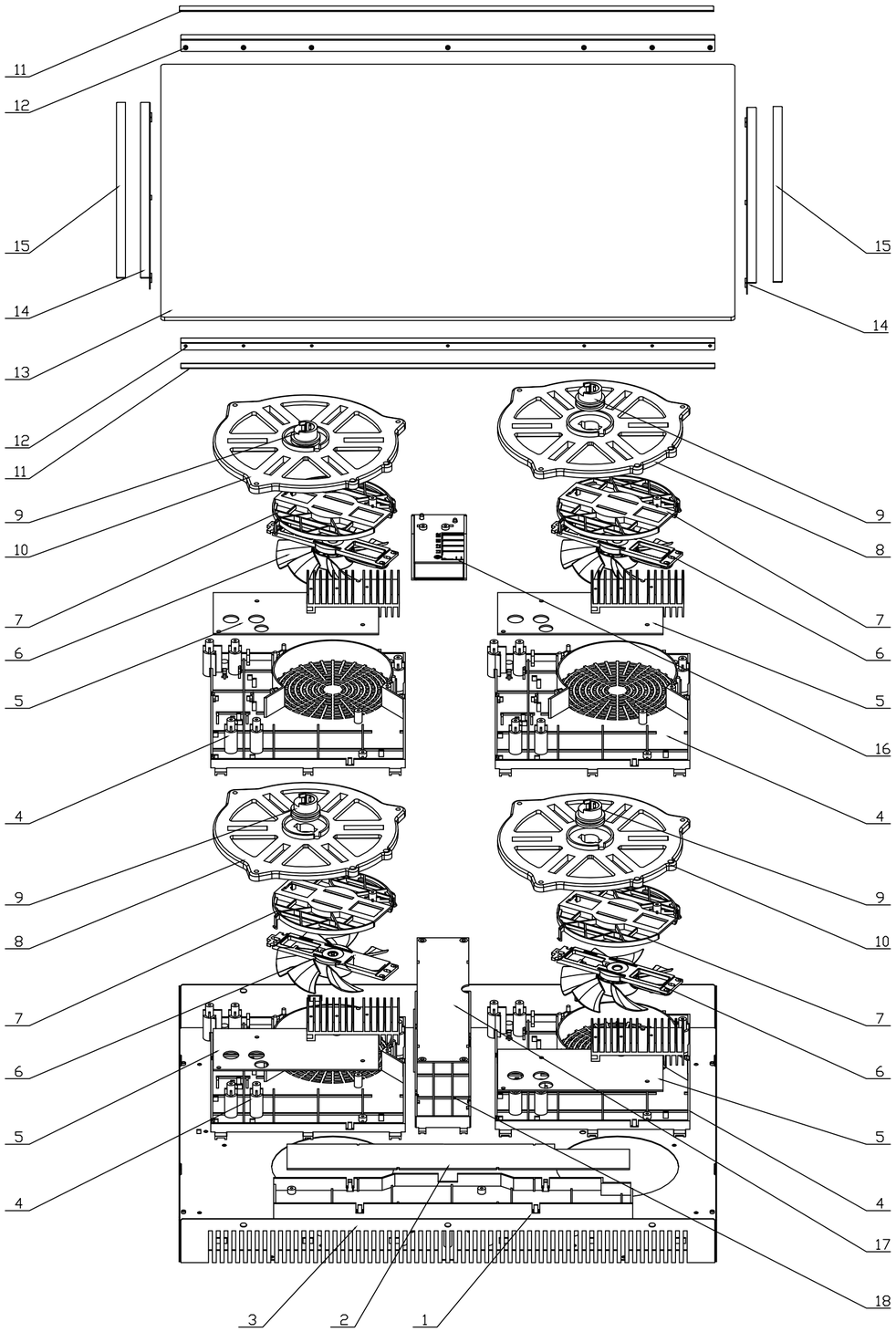

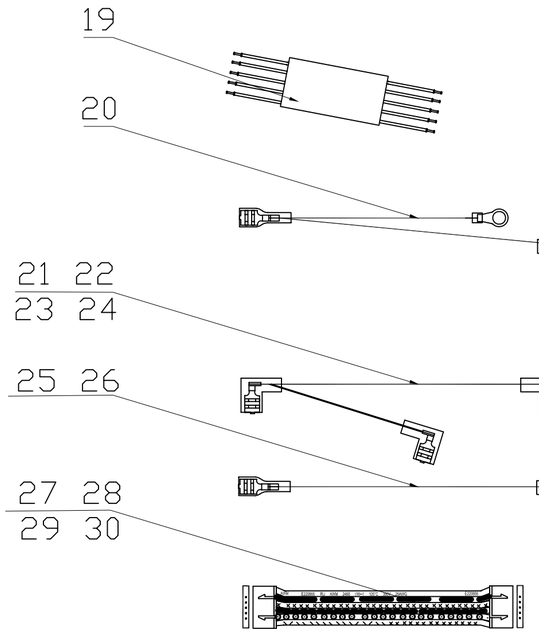

序号 No.	物料编码 Code	名称 Part Name	数量 Qty	材质 Material	单重 Weight	总重 Total	备注 Remark
37		M4*6	12				
36		M4*12	2				
35		spring washer	1				
34		M4 hex nut	2				
33		M4*10	2				
32		ST3.5*14	26				
31		ST3.5*8	12				
30		power plate main board line#	1				
29		power plate main board line#	1				
28		power plate main board line#	1				
27		power plate main board line#	1				
26		power plate and joitn box line#	2				
25		power plate and joitn box line#	2				
24		power plate and main board line#	1				
23		power plate and main board line#	1				
22		power plate and main board line#	1				
21		power plate and main board line#	1				
20		joint box/bottom cas/power plate line	1				
19		power cord	1				
18		EMC power board assemble box	1	pp			
17		EMC power board assemble	1				
16		joint box assemble	1	pa66			
15		left right seals	2	epdm			
14		left right bracket	2	sgcc t0.8			
13		ceramic plate	1				
12		from back bracket	2	sgcc t0.8			
11		front back seals	2	epdm			
10		150e coil assemb	2	cu			
9		thermal protector	4				
8		180 coil assemble	2	cu			
7		fan cover	4	pp			
6		fan assemble	4	pbt			
5		power board	4	pcb			
4		power board box	4	pp			
3		bottom case	1	sgcc t0.8			
2		c47002 key board	1	pcb			
1		key board box	1	pp			

图幅	A0	共1张	第1张	产品型号		产品编码	数量/日期
单位	mm	比例	1:1	材料		图号	审核/日期
						图纸名称 ks-c47002	设计/日期