S/M No. : FR490P0010

DAEWOO

Service Manual

Refrigerator

Model: FR-490

DAEWOO ELECTRONICS CO., LTD.

1. SPECIFICATION

MODEL NAME		FR-490	
Refirgerant	R12	180g	
	R134a	150g	
Cooling System		Fan Cooling Convection	
Refrigeration System		Air Forced Convection	
Defrost System		Fin Evaporator Forced	
Defrost Operation		Automatic Start & Stop	
Cold Control		Adjustable Dial	
Capacity	Freezer	111 ℓ	
	Refrigerator	299 ℓ	
	Total	410 ℓ	
External Dimension	Height	1771mm	
	Width	750mm	
	Depth	642mm	
Net Weight		76Kg	

2. EXTERNAL VIEW

1. FR-490

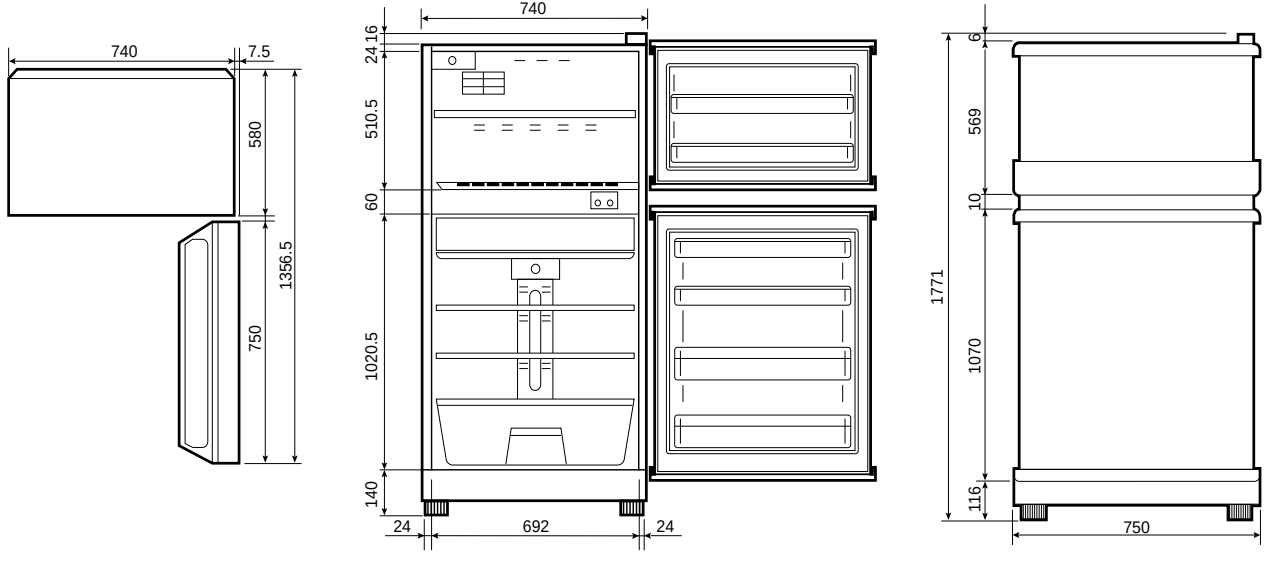

3. WIRE DIAGRAM

1. FR-490

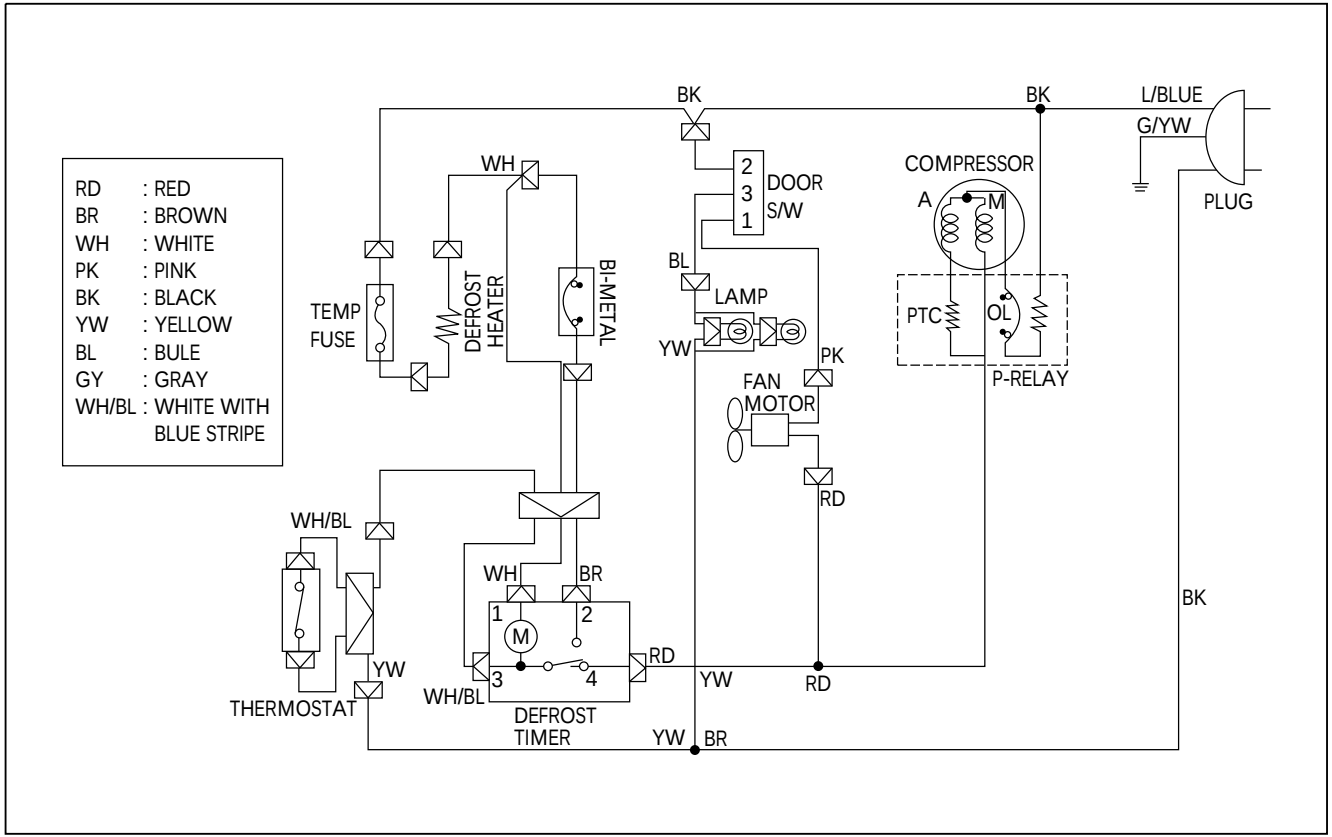

4. NAME OF PARTS

1. FR-490

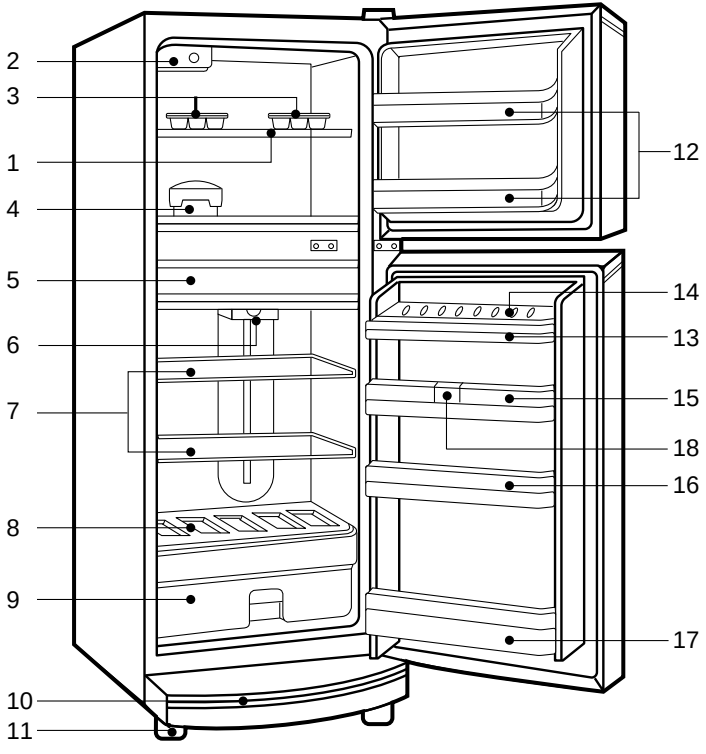

1 Freezer Crystal Shelf
2 Freezer Temperature Controller
3 Ice Tray & Crystal Clear Ice Maker
4 Ice Box
5 Chilled Tray
6 Refrigerator Temperature Controller
7 Refrigerator Crystal Shelf
8 Crisper Cover
9 Crisper
10 Front Grille
11 Adjustable Foot
12 Freezer Pocket
13 Egg Pocket
14 Egg Tray
15 Refrigerator Pocket (SM)
16 Refrigerator Pocket (Medium)
17 Refrigerator Pocket (BG)
18 Super Deodorant (Option)

5. AIR FLOW DIAGRAM

Freezer door pocket
Do not put ice cream or frozen food in freezer door pocket to store for a long term. Opening and shutting the door can rise up the temperature.

Cold air absorbing duct
Do not place food in front of the duct because it is the entrance of the cold air.

Refrigerator door pocket
Temperature is high even if the pocket is in the middle.
When storing margarine or cheese for one or two weeks, make use of the refrigerator shelf.

Crisper
Suitable in storing fruits or vegetable.
Wrapping can prevent from dryness.

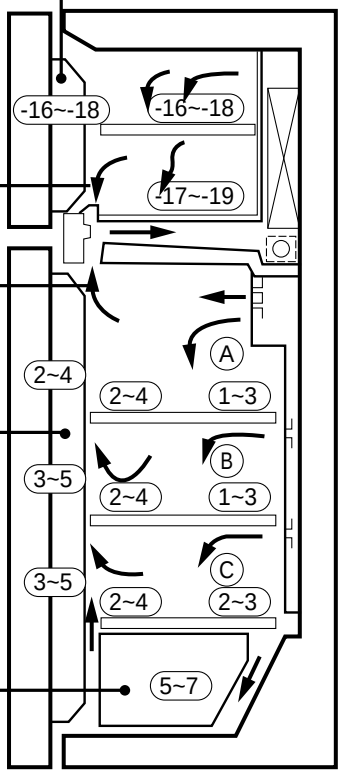

Freezer room
Do not put any bottle such as beer or beverage because it can be frozen and broken.

Refrigerating room
This model is multi-flow type which flows out cold air from each shelf space. The hot air after making the refrigerator cold, flows into cooling system through the front upper part.

Do not put food having much moisture at the middle part of each shelf space ("A", "B" and "C" part). It can be frozen owing to the low temperature.

6. REFRIGERANT CYCLE DIAGRAM

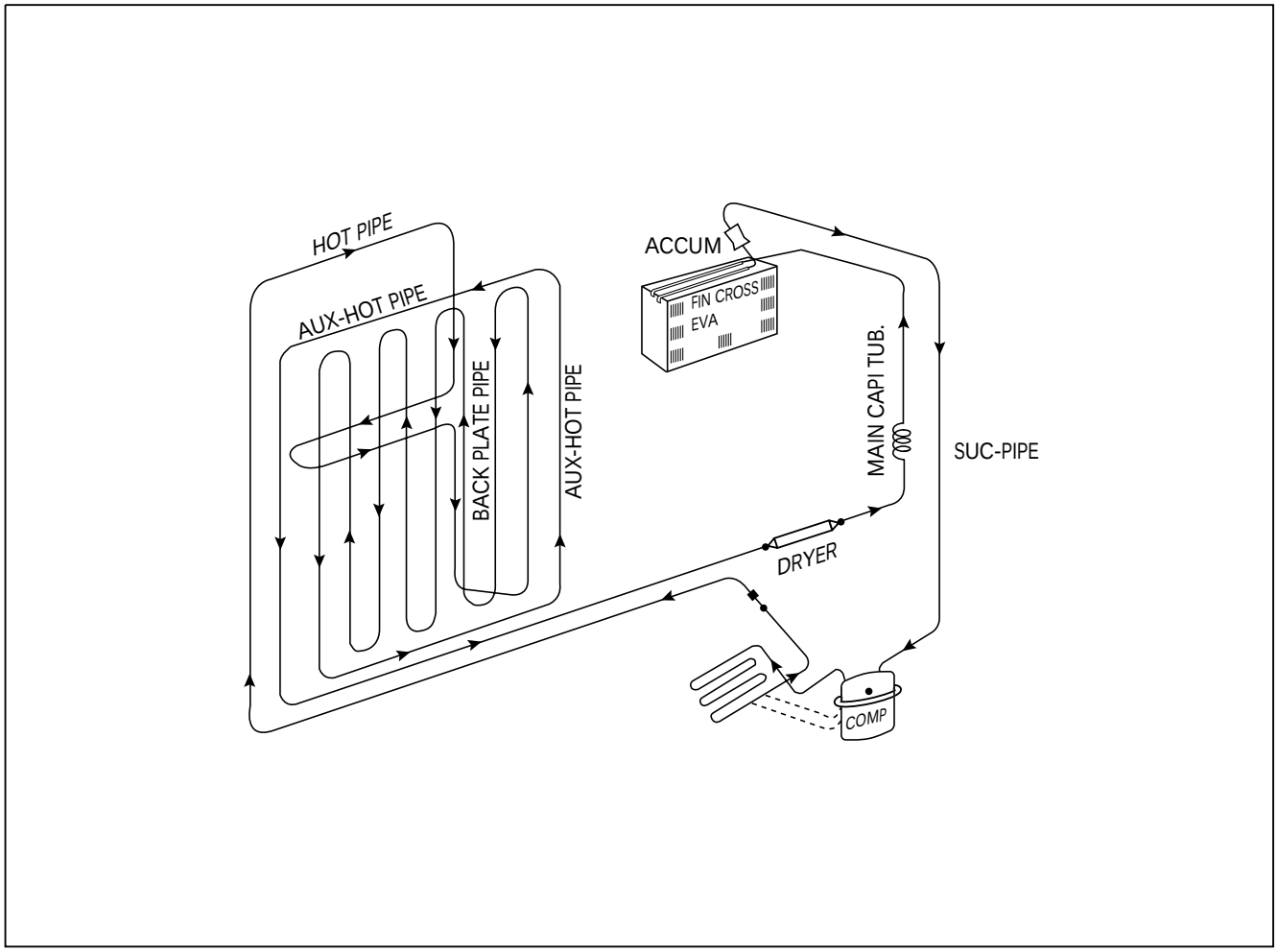

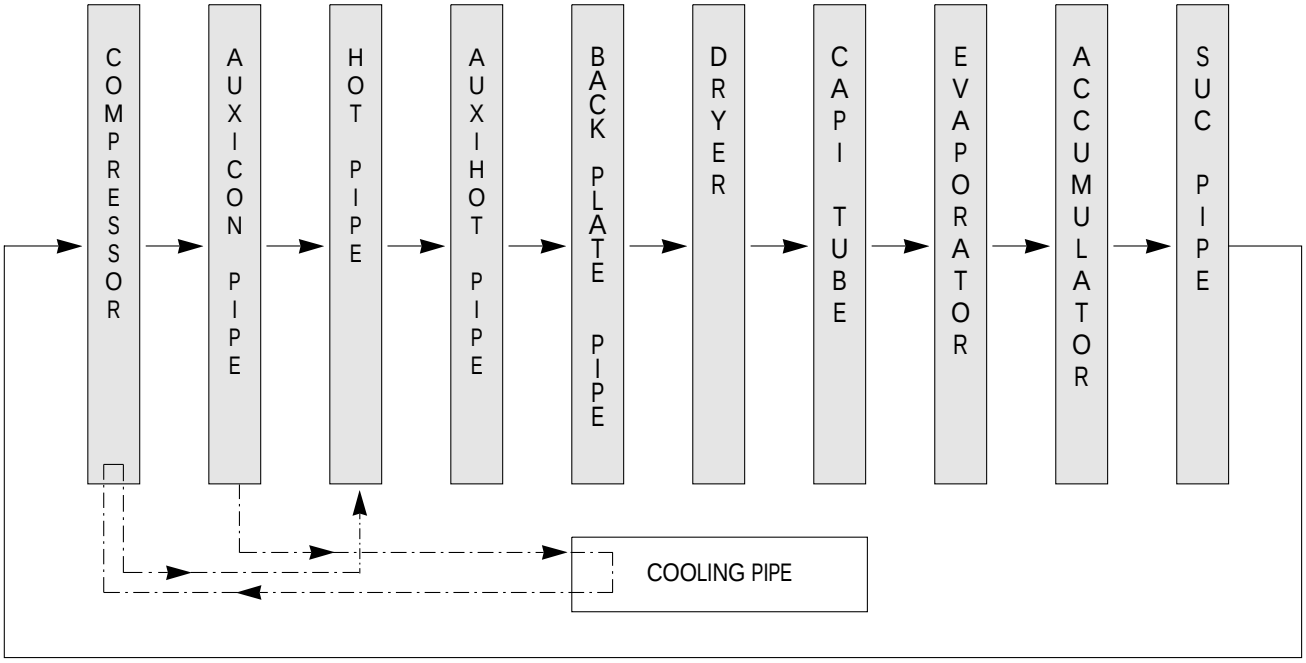

7. MACHINE ROOM VIEW AND PART LIST

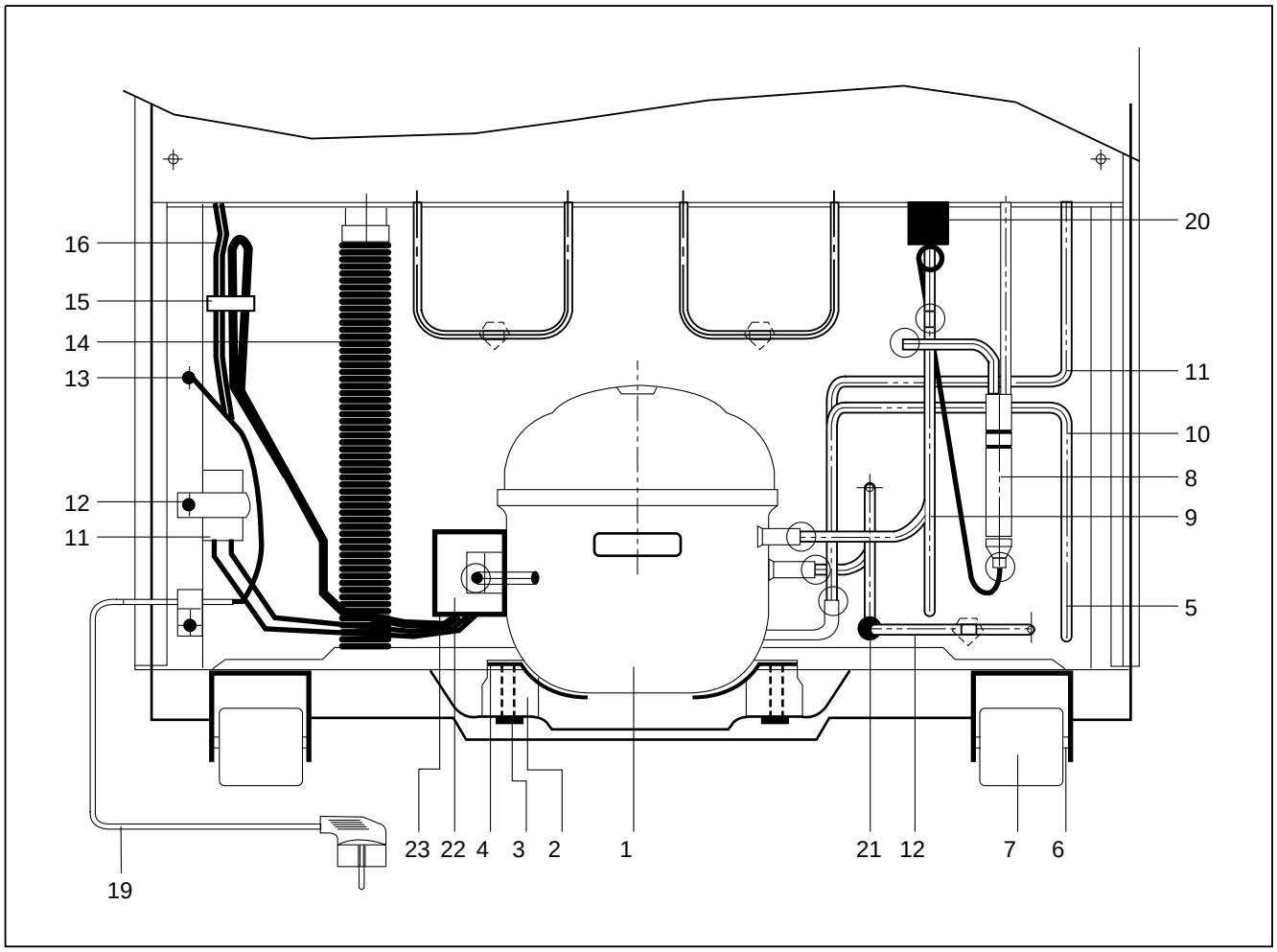

NO	PART NAME	NO	PART NAME	NO	PART NAME
1	COMPRESSOR	9	PIPE CON (SUC)	17	CABLE CLAMP
2	ABSORBER	10	PIPE COOLING CON (AUX)	18	STARTING CAPACITOR
3	BOLT COMP. FIXTURE	11	PIPE COOLING (A)	19	POWER CORD
4	FIXTURE COMP. WASHER	12	PIPE CON (P.A)	20	ABSORBER PIPE
5	PLATE AUX-CON AS	13	SCREW MACHINE	21	VIBRATIONPROOF MASS(B)
6	CASTER PIN	14	DRAIN HOSE(B) AS	22	SWITCH P-RELAY AS
7	CASTER	15	TAPE OPP	23	RELAY BAND
8	DRYER	16	CEC COVER		

8. MAIN COMPONENTS

1. COMPRESSOR

Refrigerant	R12							
Voltage	**100V/50,60Hz**	**110V/60Hz**	**115, 120V/60Hz**	**127V/60Hz**	**220V/50Hz**	**220V/60Hz**	**230V/50Hz**	**240V/50Hz**
Comp. model	X	CL27YE-3-C	CL27YE-1-C	CL27YE-2-C	SL28YE-4E-C	KL27YE-4E-C	PL25YE-4	SL28YE-6-C
Part code	X	3957127C30	3957127C10	3957127C20	3954128C60	3958127C60	3956125442	3956128C60
Strating type	X	CSIR	CSIR	SCIR	RSIR	CSIR	RSCR	RSIR

Refrigerant	R134a							
Voltage	**100V/50,60Hz**	**110V/60Hz**	**115, 120V/60Hz**	**127V/60Hz**	**220V/50Hz**	**220V/60Hz**	**230V/50Hz**	**240V/50Hz**
Comp. model	X	HBL27YE-3-C	HBL27YE-1-C	X	HSL27YE-5-C	X	HSL27YE-5-C	←
Part code	X	3952127L30	3952127L10	X	3954127L50	X	3954127L50	←
Strating type	X	CSR	CSR	X	RSIR	X	RSIR	←

2. RELAY ASSEMBLY

Refrigerant	R12							
Voltage	**100V/50,60Hz**	**110V/60Hz**	**115, 120V/60Hz**	**127V/60Hz**	**220V/50Hz**	**220V/60Hz**	**230V/50Hz**	**240V/50Hz**
Relay model	X	444UHBZZ-52	←	437THBYY-52	276THBYY-52	730RFBYY-52	197SHBYY-52	213THBYY-52
Part code	X	3018105720	←	3018109530	3018105031	3018105021	3018109700	3018105061

Refrigerant	R134a							
Voltage	**100V/50,60Hz**	**110V/60Hz**	**115, 120V/60Hz**	**127V/60Hz**	**220V/50Hz**	**220V/60Hz**	**230V/50Hz**	**240V/50Hz**
Relay model	X	783SHBZZ-52	←	X	276THBYY-52	X	276THBYY-52	←
Part code	X	3018105720	←	X	3018105031	X	3018109510	3018105031

3. RUNNING CAPACITOR

Refrigerant	R12							
Voltage	**100V/50,60Hz**	**110V/60Hz**	**115, 120V/60Hz**	**127V/60Hz**	**220V/50Hz**	**220V/60Hz**	**230V/50Hz**	**240V/50Hz**
Spec.	X	X	X	X	X	300V/5μF	X	350V/5μF
Part code	X	X	X	X	X		X	400EL15110

Refrigerant	R134a							
Voltage	**100V/50,60Hz**	**110V/60Hz**	**115, 120V/60Hz**	**127V/60Hz**	**220V/50Hz**	**220V/60Hz**	**230V/50Hz**	**240V/50Hz**
Spec.	X	230V/10μF	←	X	X	X	X	X
Part code	X	400EL15130	←	X	X	X	X	X

4. STARTING CAPACITOR

Refrigerant	R12							
Voltage	**100V/50,60Hz**	**110V/60Hz**	**115, 120V/60Hz**	**127V/60Hz**	**220V/50Hz**	**220V/60Hz**	**230V/50Hz**	**240V/50Hz**
Spec.	X	140V/100μF	←	←	X	350V/25μF	X	X
Part code	X		←	←	X	400EL16110	X	X

Refrigerant	R134a							
Voltage	**100V/50,60Hz**	**110V/60Hz**	**115, 120V/60Hz**	**127V/60Hz**	**220V/50Hz**	**220V/60Hz**	**230V/50Hz**	**240V/50Hz**
Spec.	X	200V/100μF	←	X	X	X	290V/50μF	X
Part code	X	3016400100	←	X	X	X	4124G62020	X

5. F-FAN MOTOR

Refrigerant	R12, R134a							
Voltage	**100V/50,60Hz**	**110V/60Hz**	**115, 120V/60Hz**	**127V/60Hz**	**220V/50Hz**	**220V/60Hz**	**230V/50Hz**	**240V/50Hz**
Spec.	X	3210DWNFH-2	←	←	3210DWNFF-2	3210DWNFD-1	3210DWNFI-1	←
Part code	X	401VB42021	←	←	401VA42021	4017G24502	401UB42021	←

6. DEFROST HEATER

Refrigerant	R12, R134a							
Voltage	**100V/50,60Hz**	**110V/60Hz**	**115, 120V/60Hz**	**127V/60Hz**	**220V/50Hz**	**220V/60Hz**	**230V/50Hz**	**240V/50Hz**
Spec.	X	148W	←	←	148W	←	←	←
Part code	X	400EL22311	←	←	400EL22211	←	←	←

7. LAMP ASSEMBLY

Refrigerant	R12, R134a							
Voltage	**100V/50,60Hz**	**110V/60Hz**	**115, 120V/60Hz**	**127V/60Hz**	**220V/50Hz**	**220V/60Hz**	**230V/50Hz**	**240V/50Hz**
Spec.	X	10W	←	←	13W	←	←	←
Part code	X	4019S15200	←	←	400EL20111	←	←	←

8. DEFROST TIMER (FR-490M)

Refrigerant	R12, R134a							
Voltage	**100V/50,60Hz**	**110V/60Hz**	**115, 120V/60Hz**	**127V/60Hz**	**220V/50Hz**	**220V/60Hz**	**230V/50Hz**	**240V/50Hz**
Spec.	X	TMDEX09UA1	←	←	TMDEX09UC1	←	←	←
Part code	X	3018101200	←	←	3018100300	←	←	←

9. PCB TRANSFORMER (FR-490P)

Refrigerant	R12, R134a							
Voltage	**100V/50,60Hz**	**110V/60Hz**	**115, 120V/60Hz**	**127V/60Hz**	**220V/50Hz**	**220V/60Hz**	**230V/50Hz**	**240V/50Hz**
Part code	X	5EPK060606	←	←	5EPK060508	←	5EPK060080	5EPK060509

10. MAIN PCB ASSEMBLY (FR-490P)

Refrigerant	R12, R134a							
Voltage	**100V/50,60Hz**	**110V/60Hz**	**115, 120V/60Hz**	**127V/60Hz**	**220V/50Hz**	**220V/60Hz**	**230V/50Hz**	**240V/50Hz**
Spec.	X	P706	←	←	←	←	←	←
Part code	X	3014300830	←	←	3014300530	←	←	←

11. DRYER

Refrigerant	R12	R134a
Spec.	10 g	15 g
Part code	3016800103	3016801100

POWER CORD SPECIFICATION

NO	SHAPE OF POWER CODE	PART CODE	DESCRIPTION	REMARK
1		3011315000	CP-2PIN	FOR EUROPEAN COUNTRY
2		401RA17200	CP-2PIN	FOR OTHER COUNTRY
3		4006D17101	KP-30	FOR AMERICA
4		401PD17101	KP-211	FOR JAPAN & TAIWAN
5		3011300801	BP-3PIN	
6		3011303010	#267	FOR CHILE
7		3011315310		FOR ISRAEL
8		3011303050	BS-1363A	FOR U.K, MIDDLE ASIA SINGAPORE & MALAYSIA
9		3011301200	KP-551/550	FOR CHINA & AUSTRALIA

* Upper power cord's part code is only for lead wire, without any kinds of terminal or housing.

9. DOOR COLOR SPECIFICATION

1. ASSEMBLY URETHAN FREEZER DOOR

Refrigerant	R12				R134a			
Color type	Dull lamina sheet	High glossy lamina sheet	Normal PCM	High glossy bright PCM	Dull lamina sheet	High glossy lamina sheet	Normal PCM	High glossy bright PCM
Part code	X	PFDT1UF090	X	X	X	PFDT1UJ095	X	X

2. ASSEMBLY URETHAN REFRIGERATOR DOOR

Refrigerant	R12				R134a			
Color type	Dull lamina sheet	High glossy lamina sheet	Normal PCM	High glossy bright PCM	Dull lamina sheet	High glossy lamina sheet	Normal PCM	High glossy bright PCM
Part code	X	PFDT1UJ170	X	X	X	PFDT1UJ175	X	X

COLOR TABLE

1. PCM type

NO	COLOR CHIP	COLOR NAME
1		P/WITH (WH069)
2		'94 L/GRAY (GY158)
3		'95 L/GRAY (GY259)
4		'94 M/GRAY (GY331)
5		'95 M/GRAY (GY335)
6		'97 M/GRAY (GY267)
7		M. D/GRAY (GY750)
8		N/BLUE (BL718)
9		MINT GREEN (GN206)
10		'97 BEIGE (BE215)

2. Lamina sheet type

NO	COLOR CHIP	COLOR NAME
1		P/WITH (WH069)
2		'94 L/GRAY (GY158)
3		'95 L/GRAY (GY259)
4		'94 M/GRAY (GY331)
5		'95 M/GRAY (GY335)
6		'97 M/GRAY (GY267)
7		M. D/GRAY (GY750)
8		N/BLUE (BL718)
9		MINT GREEN (GN206)
10		S/GOLD
11		G/GREEN

10. EXPLODED VIEW AND PARTS LIST

1. FR-490

1. Exploded view

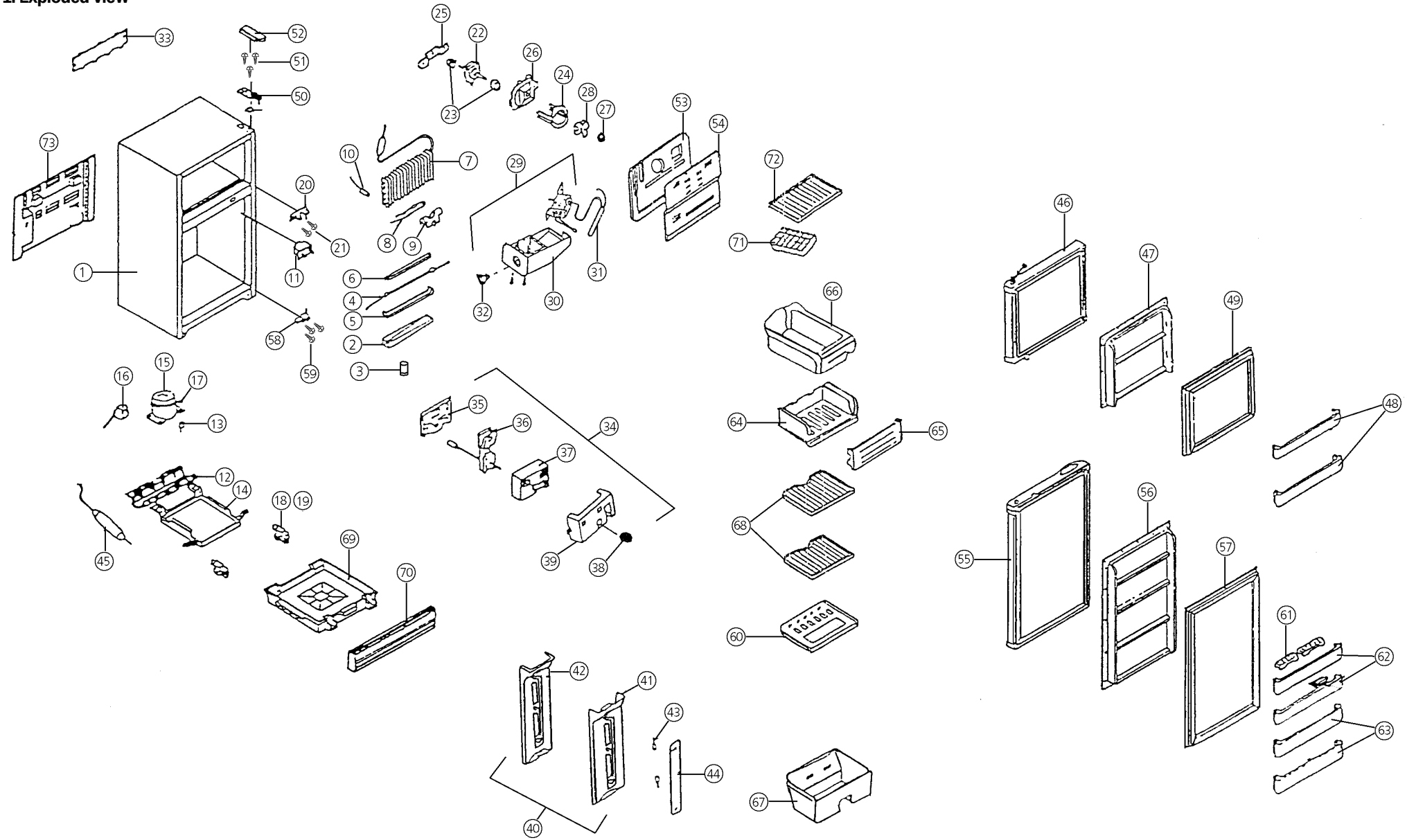

2. Parts list

NO	PART CODE	PART NAME	DESCRIPTION	QUANTITY	REMARK
1		ASSY URT CAB		1	REFER TO # 76
2	4010654111	GUIDE DRN	AL	1	
3	4018654120	PIPE DRN	AL T1.0	1	
4		HTR GLASS TUBE AS		1	REFER TO # 64
5	4017273580	COVER DEFR HTR *U	AL	1	
6	4017273570	COVER DEFR HTR *T	AL	1	
7	3017044700	EVAPORATOR FIN AS		1	
8	400EL21213	FUSE TEMP AS		1	
9	4017290590	FIXTURE FUSE TEMP	PP	1	
10	3018111100	SWITCH BIMTL AS		1	
11	3010023400	SWITCH DR AS		1	
12	3010300602	BASE COMP	T1.2	1	
13	3010100201	ABSORBER COMP	NR H=40	4	
14	3014500403	PLATE AXCON AS	SGCC	1	
15		COMPRESSOR		1	REFER TO # 63
16		SWITCH P RELAY AS		1	REFER TO # 63
17	4019HO9030	SPECIAL WASHER	SWRH	4	
18	4017240622	FOOT *F ASS		2	
19	4017240192	ADJ FOOT AS	PP	2	
20	4012900630	HINGE *M AS	ZN DC-2	1	
21	3016000220	SPECIAL SCREW	M6X16 SWCH22A	2	
22		MOTOR SHADED AS		1	RFER TO # 64
23	4017208430	ABSORBER MOTR	EPR-B3 (H40)	1	
24	4017286412	FAN MOTOR COVR (A)	HIPS	1	
25	4017232244	COVER MOTR B	HIPS	1	
26	4017232233	COVER MOTR C	HIPS	1	
27	4004Q10060	FIXTURE FAN	STS	1	
28	4017242312	FAN	ABS	1	
29	3010501601	BOX CONTL AS		1	
30	3010500403	BOX CONTL	HIPS	1	
31	018300401	THERMOSTAT		1	
32	4017631041	KNOB C/S	ABS		
33	4010690133	M-PCB COVER		1	
34	4010626003	ASSY R-DAMPR		1	
35	4010626030	INSULATOR DAMP B	F-PS	1	
36	4010626400	DAMPER		1	
37	4010626022	INSULATOR DAMP A	F-PS	1	
38	4017631152	KNOB DAMP	AB$	1	
39	4010626016	COVER DAMP	HIPS	1	

Exploded views and parts list

NO	PART CODE	PART NAME	DESCRIPTION	QUANTITY	REMARK
40	401 SD75302	MULTI DUCT AS		1	
41	4010675215	DUCT MULTI	HIPS	1	
42	4010675253	INSULATOR M/F DUCT	F-PS	1	
43		LAMP AS		2	REFER TO # 64
44	4010615311	SHADIER	GPS	1	
45		DRYER AS		1	REFER TO # 64
46		ASSY URT *T DOOR		1	REFER TO # 77
47	4010646014	LINER F DR	ABS 1.4X785X1200	1	
48	4010630090	POCKET F *T	GPS	2	
49	4010G47104	GASKET F DR	PVC-S 42	1	
50	4010651402	HINGE *T AS	SPHC	1	
51	3016000301	SPECIAL SCREW	M5X14 S1018C ZN5MICRO	3	
52	4010G51455	COVER *T HI	PP 42	1	
53	4010674202	LOUVER F INSU AS		1	
54	4010674012	LOUVER F	HIPS	1	
55		ASSY URT *U DOOR		1	REFER TO # 77
56	4010637017	LINER R DR	ABS 1.4X785X1105	1	
57	4010647204	GASKET R DR AS		1	
58	3012900401	HINGE *U AS	MF-ZN5-C	1	
59	3016000600	SPECIAL SCREW	M6X20	4	
60	30100A027 1	COVER WCASE AS		1	
61	4010630621	CASE EGG	GPS	2	
62	4010630611	POCKET EGG	HIPS	2	
63	4010630640	POCKET BOTL	HIPS	2	
64	3011108900	CASE CHILD	GPS	1	
65	3011715600	DOOR CHILD	GPS	1	
66	4010E99102	BOX ICE AS		1	
67	3011424100	CASE VEGETB	GPS	1	
68	4010655120	SHELF R	GP	2	
69	4010630661	BOILD	PP T1.3	1	
70	4010665015	COVER CAB BRKT	PP	1	
71	3011100400	CASE ICING AS		1	
72	3017808200	SHELF F	GPS (INSAE=MU)	1	
73	4010600018	GRILLE	PP(B-3916 YUKONG)	1	
74	4010E59900	DEODRANT		1	OPTION

11. ELECTRONIC FUNCTION

1. FR-490

1) How to use the panel

• The warm, normal, cold LEDS in monitor are displayed according to freezer temperature control button pushed.

1) Push time set button once
   • Adjust the hour with time adjuster.

2) Push time set button twice
   • Adjust the minute with time adjuster.

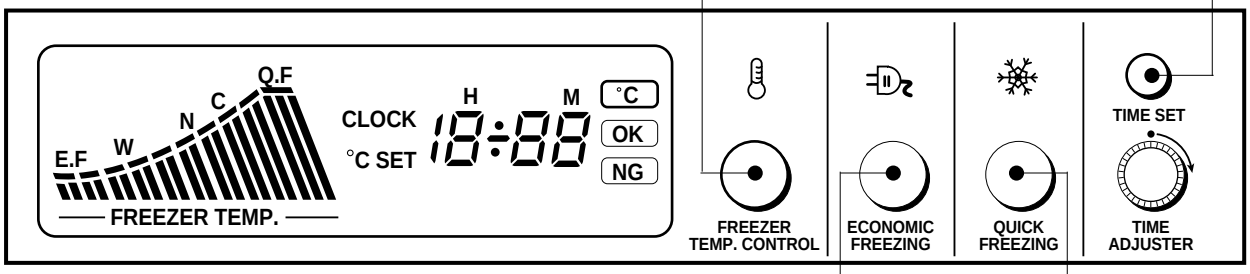

• Economic freezing is started by pushing the economic freezing button.

• If stop economic freezing mode, push the freezer temp. control or economic freezing button again.

• Quick freezing is on for 90 min by pushing the quick freezing button.

• If stop the quick freezing mode, push the quick freezing button again.

2) Function table

NO.	Control Function	Control Objects	Contents	Remark
1	Quick Freezing	COMP. Fan LED	1. Quick freezing is started by pushing the quick freezing button. 2. If stop the quick freezing mode, push the quick freezing button again. 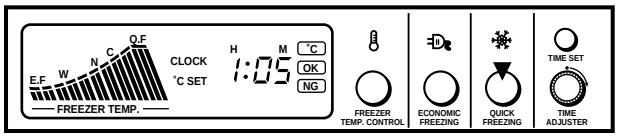 3. The quick freezing mode works for 90 min. 4. When the quick freezing mode is over or manually reset, the refrigerator will return to a former function automatically. 5. If quick freezing switch is turn on during defrosting Pre-cool, defrosting starts from Pre-cool after finishing quick freezing. But if COMP. has been operating for more than 40 min., the Pre-cool will be omitted. 6. If quick freezing switch is turned on during Defrosting Heater on or Fan delay, it performs quick freezing just after finishing defrosting.	
2	Freezer temperature control	COMP. Fan	1. When the power of refrigerator is on, the normal temperature is automatically set. 2. It is adjusted 3 steps by freezer temperature button. 3. The WARM, NORMAL, COLD LEDs in monitor are displayed according to freezer temperature control button pushed. 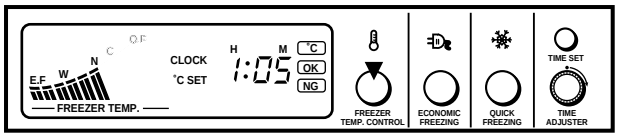 4. In 5 seconds, after pushing, the monitor display the current time. 5. The F-sensor temperature is as followed according to COMP. on/off time. **Cold / Normal / Warm** **COMP. off**: -27°C / -24°C / -21°C **COMP. on**: -12°C / -18°C / -15°C	
3	Prevent COMP. restarting	COMP. Fan	1. When the compressor is stopped, it cannot restart within 6 min.	
4	Refrigerator temperature control	Damper Fan	1. It can be controlled by open/close of baffle plate in damper according to temperature change of the refrigerator.	

NO.	Control Function	Control Objects	Contents	Remark
			2. When the knob of the damper is located at off position, the temperature of refrigerator is the same as ambient temperature. 3. When the knob of damper is located at normal position, the temperature of refrigerator is 3~4˚C.	
5	Economic freezing	COMP. Fan Monitor	1. Economic freezing is started by pushing the economic freezing button. 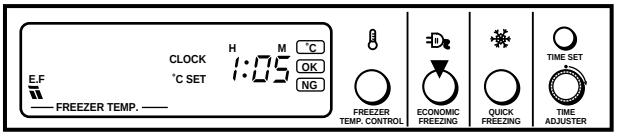 2. If stop economic freezing mode, push the freezer temperature control button or economic freezing button again.	
6	Clock set	Monitor	1. When the power of the refrigerator is on, the the clock is set at 12:00. 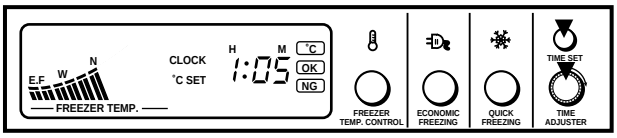 2. When push the time set button, the 12(hour) will blink, then set hour with the time adjuster. It can be set from 0 to 12. 3. When you push the time set button again, the 00(min.) will blink, then set min. by turning the time adjuster. It can be set from 00 to 59.	
7	Defrost mode	COMP. Fan Heater LED	1. When the accumulating time of the COMP. operation is 8 hours, the defrost mode is started. 2. If the D-sensor senses below 0˚C at initial power on, then the defrost mode is started. 3. The compressor must continuously run for 32 min. at Pre-cool regardless of freezer temperature setting. 4. In D-heater on, if D-sensor's temperature is 13˚C, D-heater is off. 5. COMP. & fan must be off at COMP. & fan delay step. 6. Defrost LED on the M-PCB is on, during the defrost mode.	

<table>
<tr><th>NO.</th><th>Control Function</th><th>Control Objects</th><th>Contents</th><th>Remark</th></tr>
<tr><td></td><td></td><td></td><td>
<table>
<tr><th></th><th>Pre-cool</th><th>Defrost heater</th><th>COMP & fan delay</th><th>Common mode</th></tr>
<tr><td>COMP. & fan</td><td></td><td></td><td></td><td></td></tr>
<tr><td>D-heater</td><td></td><td></td><td></td><td></td></tr>
<tr><td>D-LED</td><td></td><td></td><td></td><td></td></tr>
<tr><td>Prior</td><td>Function</td><td colspan="2">Defrost</td><td>Function</td></tr>
</table>
</td><td></td></tr>
<tr><td>8</td><td>Forced defrost</td><td>D-heater</td><td>1. If quick freezing button is pushed 5 times and freezer temperature control button is pushed at the same time, then forced defrost mode begins.
2. Its procedures are from D-heater to COMP. & fan delay except Pre-cool step.
3. The others are same as defrost mode.</td><td></td></tr>
<tr><td>9</td><td>Judgement of sensor defect</td><td>NG LED Monitor</td><td>1. The refrigerator can check of the sensors, such as open, short and the defect of disconnections.
2. The checktime of the sensor defect is after initial power on, before the defrost mode.
3. When the sensor defect is checked, the NG LED is on, and the error message is displayed according to the kinds of defects.
4. When the sensor defect occurs, all functions are stopped.</td><td></td></tr>
</table>

3) Self-diagnosis table

Error mode	Defect function	Check method
F 1	Open F-sensor	- The voltage of port 3 in micom is lower than 0.2V or not. - The connection state of connector(C3) in M-PCB is good or not. - The characteristics of diode D02, D04 are good or not. - The resistance value of R6 is the same as standard value or not.
F 2	Short F-sensor	- The voltage of port 3 in micom is lower than 0.2V or not. - The connection state of connector(C3) in M-PCB is good or not. - The characteristics of diode D02, D04 are good or not. - The resistance value of R6 is the same as standard value or not.
E 1	Open D-sensor	- The voltage of port 4 in micom is lower than 0.2V or not. - The connection state of connector(C3) in M-PCB is good or not. - The characteristics of diode D03, D05 are good or not.
E 2	Short D-sensor	- The voltage of port 4 in micom is lower than 0.2V or not. - The connection state of connector(C3) in M-PCB is good or not. - The characteristics of diode D03, D05 are good or not.
F 3	Defect defrost	- D-sensor is good or not. - The applied voltage in D-sensor is higher than 2.94V or not. - The resistance value of R5 is the same as standard value or not. - Defrost heater is good or not. (Resistance of heater is 327¡ 260Ω.) - The thermal fuse is good or not. - The relay(RY3) for defrost is good or not.
F 4	Defect switch	- The port 26, 27, 28, 29 and 30 in micom are high level or not. - Each switch(button) is good or not.
F 5	Defect compressor Gas leakage Defect freezing cycle Defect F-sensor	- F-sensor is good or not. - The resistance value of R021, R022 in F-PCB is good or not. - The compressor is good or not. - The gas in freezing cycle is leaked or not.

➧ After repairing, must initialize micro-processor, if not, then the error message in monitor is not erased. The method for initialization is to short the terminal of capacitor CO10.

4) Circuit and wiring diagram
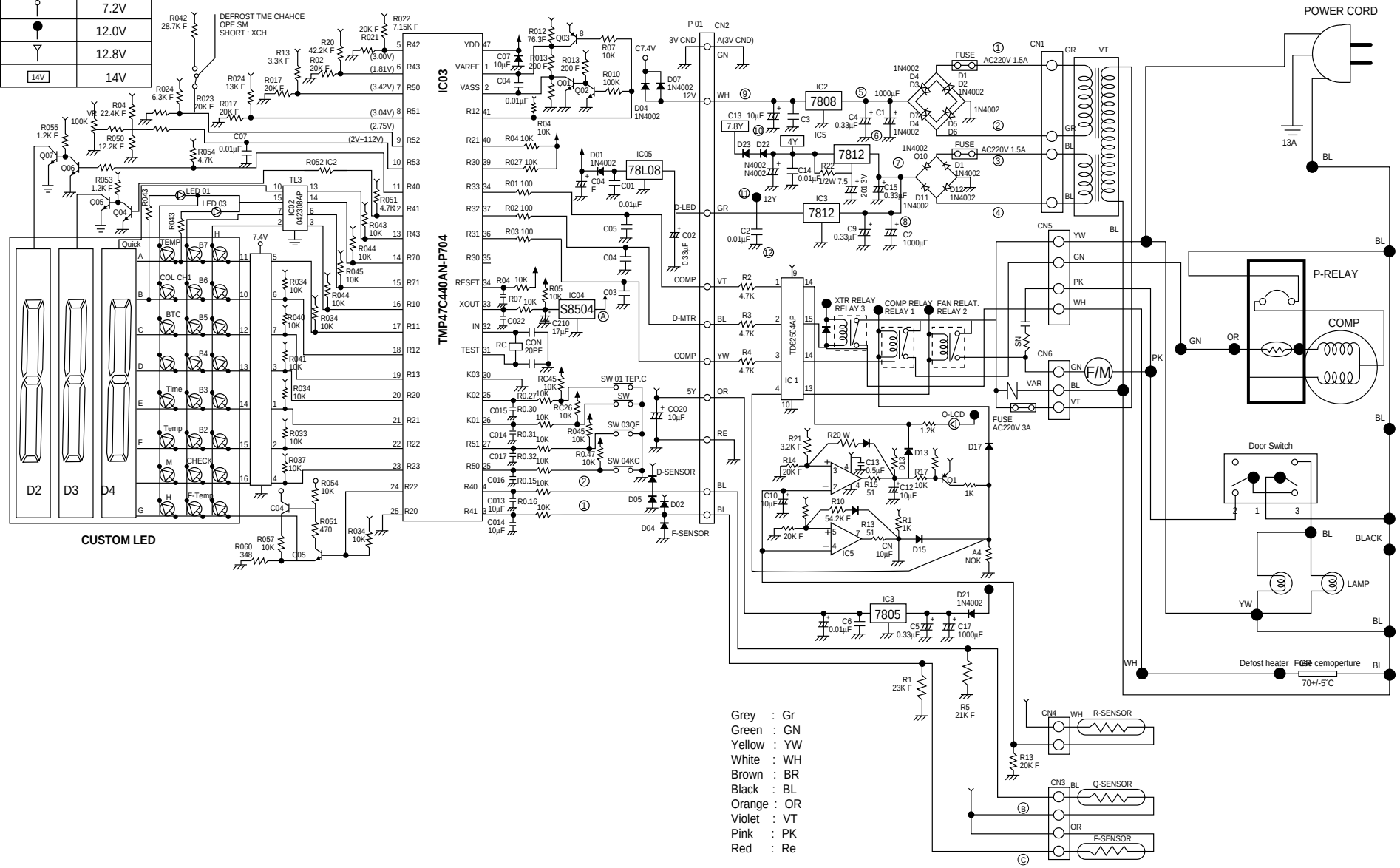
DIDVIDED	SYMBOL	VOLTAGE
		5.0V
		5.4V
		7.2V
		12.0V
		12.8V
	14V	14V