DAEWOO ELECTRONICS

Service Manual
No-Frost
Combi-Refrigerator

Models:

ERF-386A

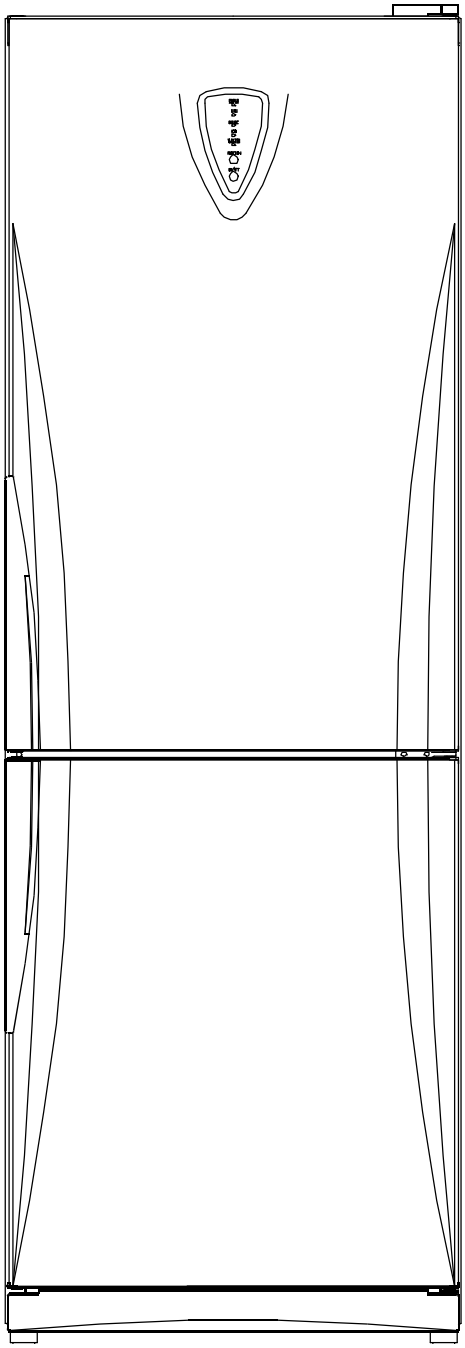

DAEWOO ELECTRONICS MANUFACTURING ESPAÑA, S.A.

. CONTENTS

1. SPECIFICATIONS
2. EXTERNAL DRAWINGS

3. MACHINE ROOM VIEW
4. REFRIGERANT CYCLE
5. TEMPERATURES DIAGRAM
6. WIRING DIAGRAMS
7. PCB CIRCUIT DIAGRAMS

8. DOOR POSITION CHANGE PROCESS
9. EXPLODE DRAWING
10. PARTS LIST
11. PCB CONTROL FUNCTION

1. SPECIFICATIONS

Model name		386A					
Division		Full A					
Refrigerant type		R-134A					
Refrigerant Q´ty		100 grs					
Blowing agent		C-PENTANE					
Cooling system		Fan cooling system					
Defrost system		Automatic start & Automatic stop system					
Compressor		Sanyo CBE-140L5Z					
Rated voltage		AC220~240V / 50Hz					
Rated input (A)		0.42A					
Lamp rated input (W)		15					
Gross capacity (liter)	Freezer	109					
	Refrigerator	218					
	Total	327					
External dimension (mm)	Height	1869					
	Width	600					
	Depth *	642					
Energy class		A					
Freezing capacity(kg/24h)		5					
Star rating		* ***					
Climate class		N					
Net weight (kg)		72					

REMARKS:

* Depth exception handle

***** Division: Full A = Full automatic

1.2. Types of the approved safety standars

2. EXTERNAL DRAWINGS

2.1. ERF-386A

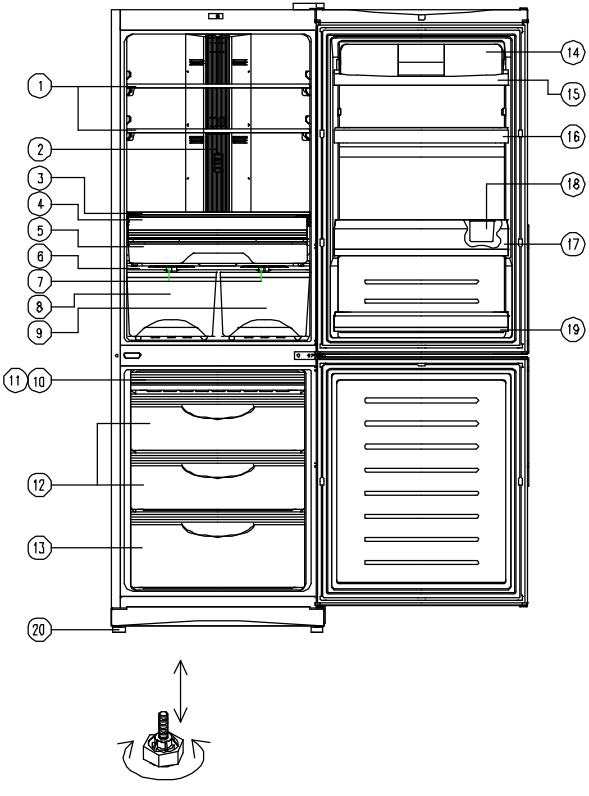

1. Shelves (ERF-386A : 3EA)
2. Multi duct
3. Shelf of low temp compartment
4. Door of low temp compartment
5. Low temp compartment
6. Cover vegetable
7. Knob humidity
8. Vegetable case "L"
9. Vegetable case "R"
10. Case f "D"
11. Case icing (In "case f d")
12. Case f "C" (2EA)
13. Case f "A"
14. Cover dairy
15. Dairy pocket
16. Pocket "R"
17. Bottle pocket
18. Guide bottle pocket
19. Multi pocket
20. Adjustable foot

3. MACHINE ROOM VIEW

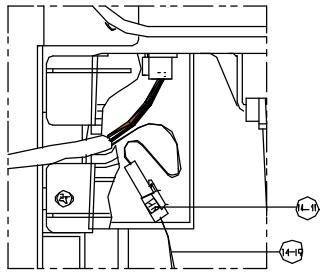

DETAIL "X"

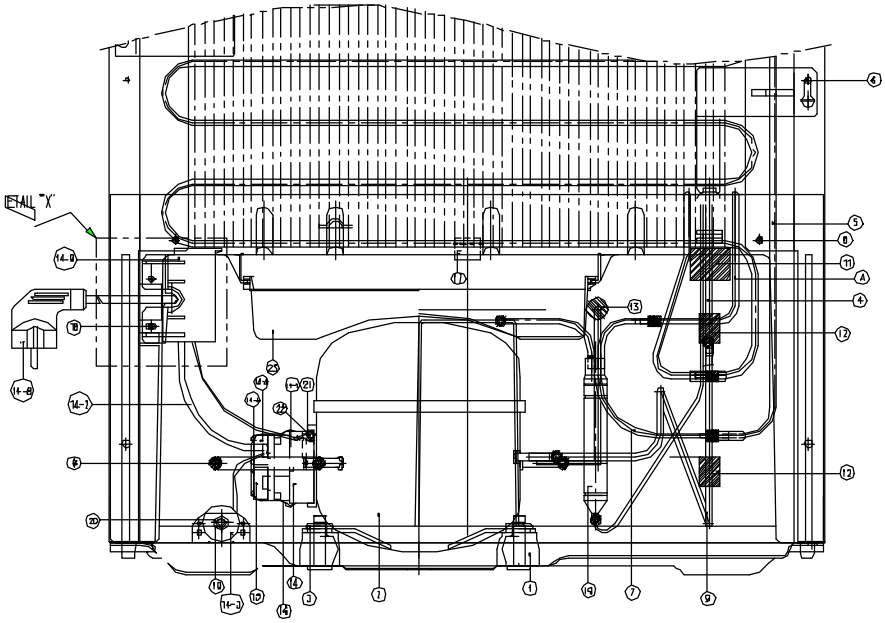

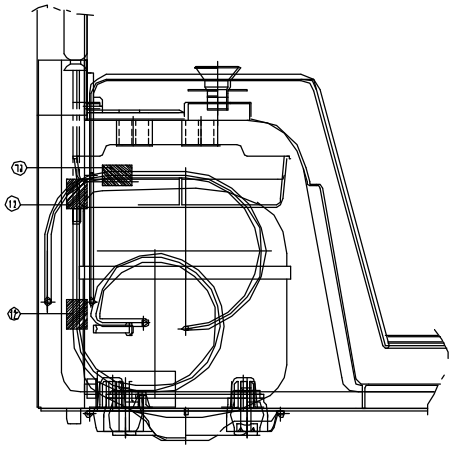

No.	PART NAME	No.	PART NAME	No	PART NAME
A	PIPE HOT	14	BOX RELAY AS	17	CAP DRAINER
1	ABSORBER COMP	14-1	BOX RELAY	18	SCREW TAPPING
2	COMPRESSOR	14-2	HARNESS RELAY	19	SPECIAL WASHER R/C
3	FIXTURE COMP	14-3	CAPACITOR RUN AS	20	SPECIAL NUT R/C
4	EVAPORATOR AS	14-4	CABLE CLAMP	21	SPECIAL WASHER
5	PIPE WI-CON AS	14-5	SCREW TAPPING	22	SCREW MACHINE
6	SPECIAL SCREW E	14-6	SWITCH P RELAY PTC	23	CASE VAPORI
7	PIPE CONN B	14-7	SWITCH P RELAY OL		
8	PIPE CHARGE	14-8	CODE POWER AS		
9	PIPE SUC. CONN	14-9	COVER ME HOUSING		
10	DRYER AS	14-10	HARNESS EARTH		
11	ABSORBER PIPE B (GUM)	14-11	LABEL EARTH		
12	ABSORBER PIPE C	15	RELAY COVER		
13	ABSORBER PIPE C	16	BAND RELAY		

4. REFRIGERANT CYCLE

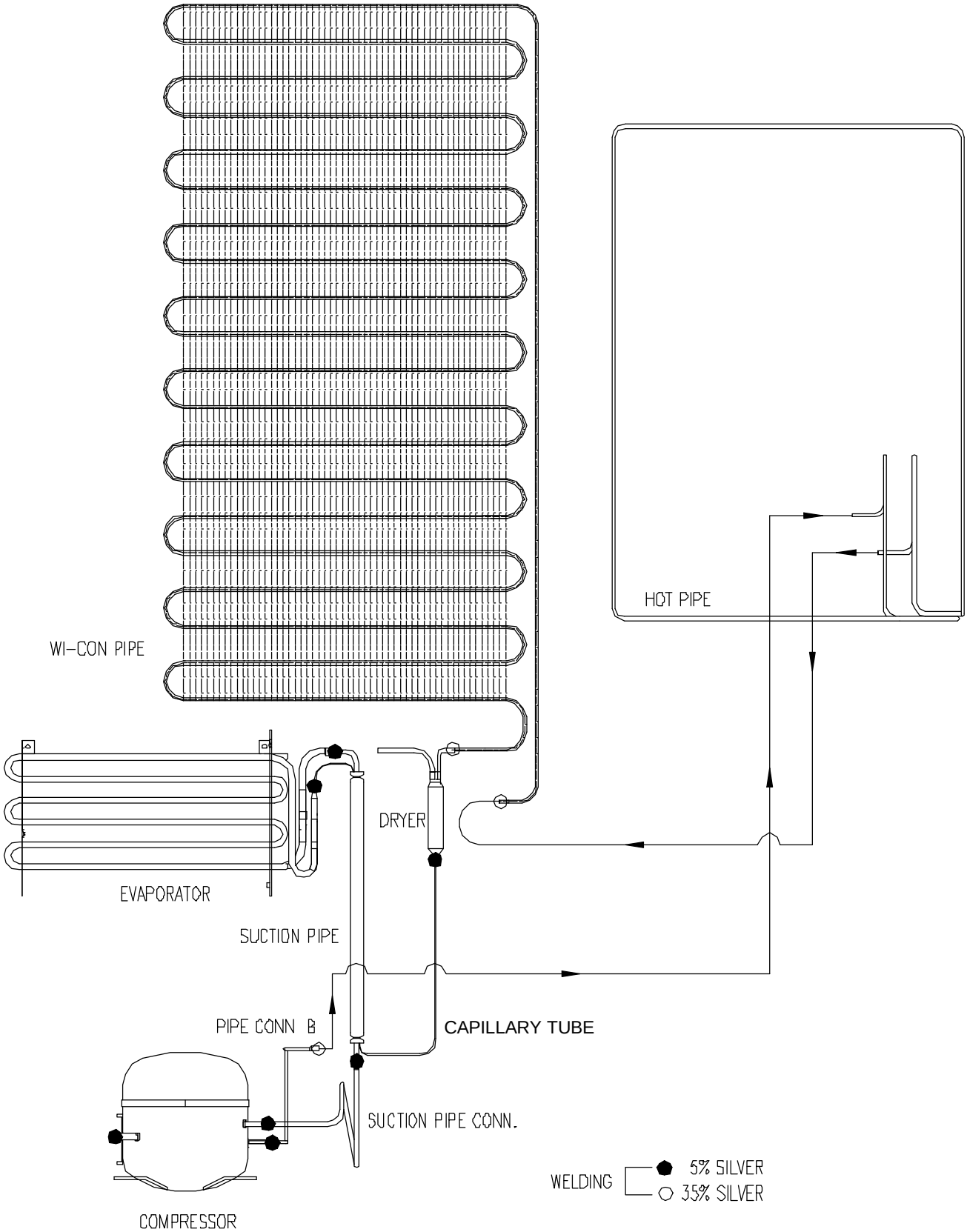

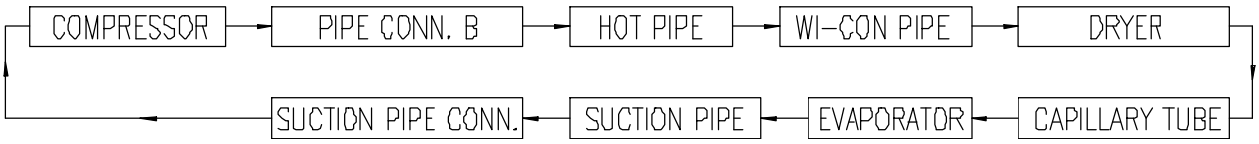

5. TEMPERATURES DIAGRAM

Refrigerator

SUPER	: 0 ºC
HIGH	: 1 ºC
MID	: 3 ºC
LOW	: 5 ºC
VAC	: 6 ºC

Low temp compartment : 3 ºC

Vegetables compartment: 0 ºC~5 ºC

Freezer:

SUPER	: -23 ºC
HIGH	: -22 ºC
MID	: -20 ºC
LOW	: -18 ºC
VAC	: -16 ºC

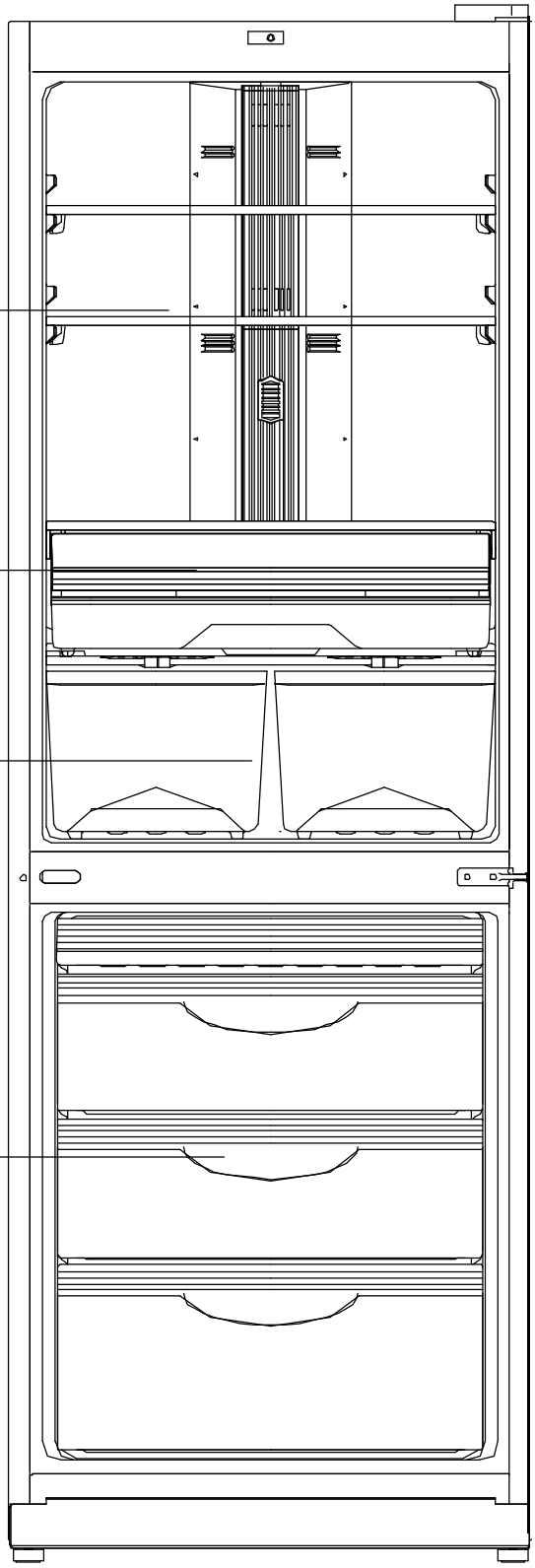

6. WIRING DIAGRAMS

6.1- ERF-XX6A

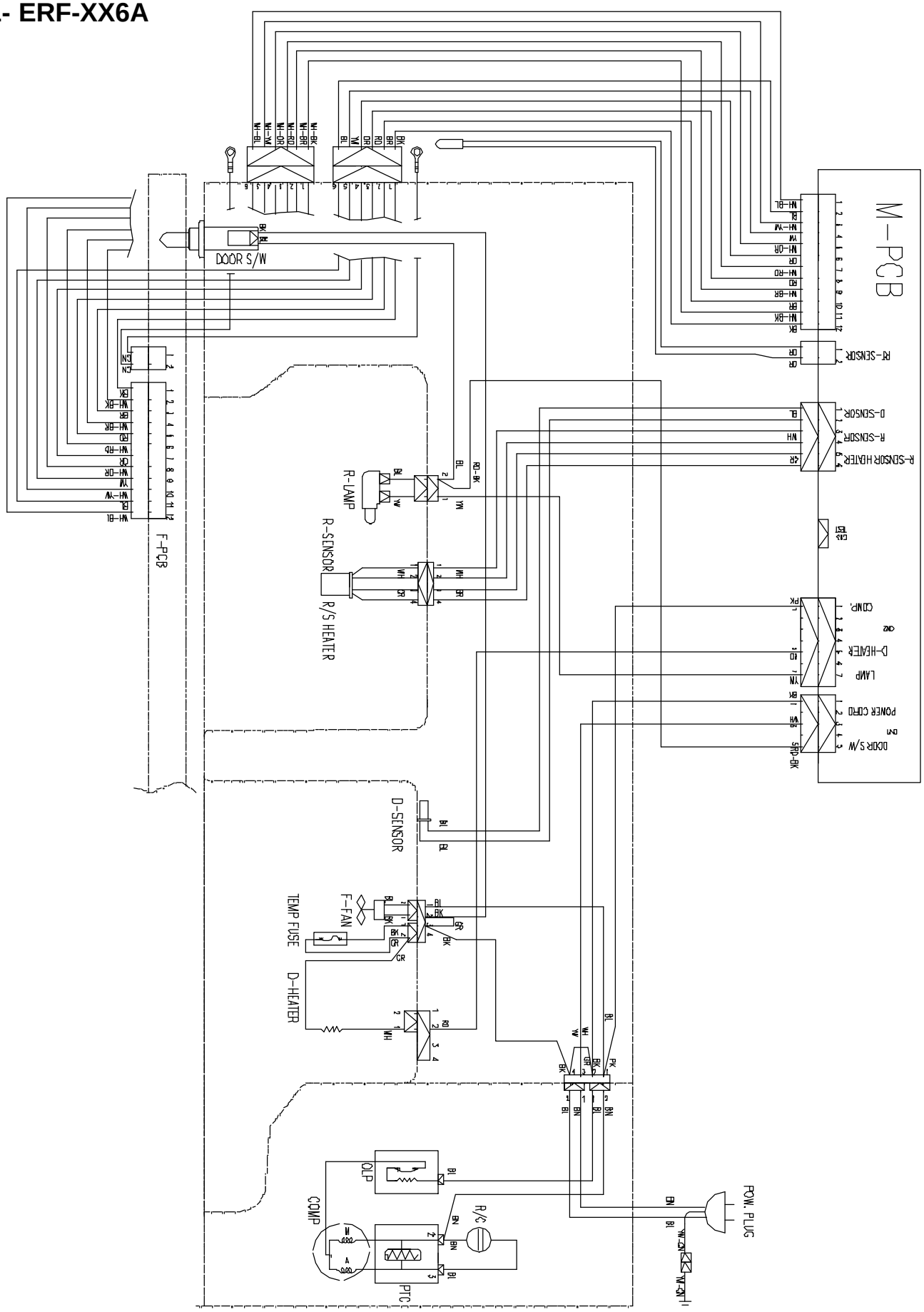

7. PCB CIRCUIT DIAGRAMS

7.1- ERF-XX6A

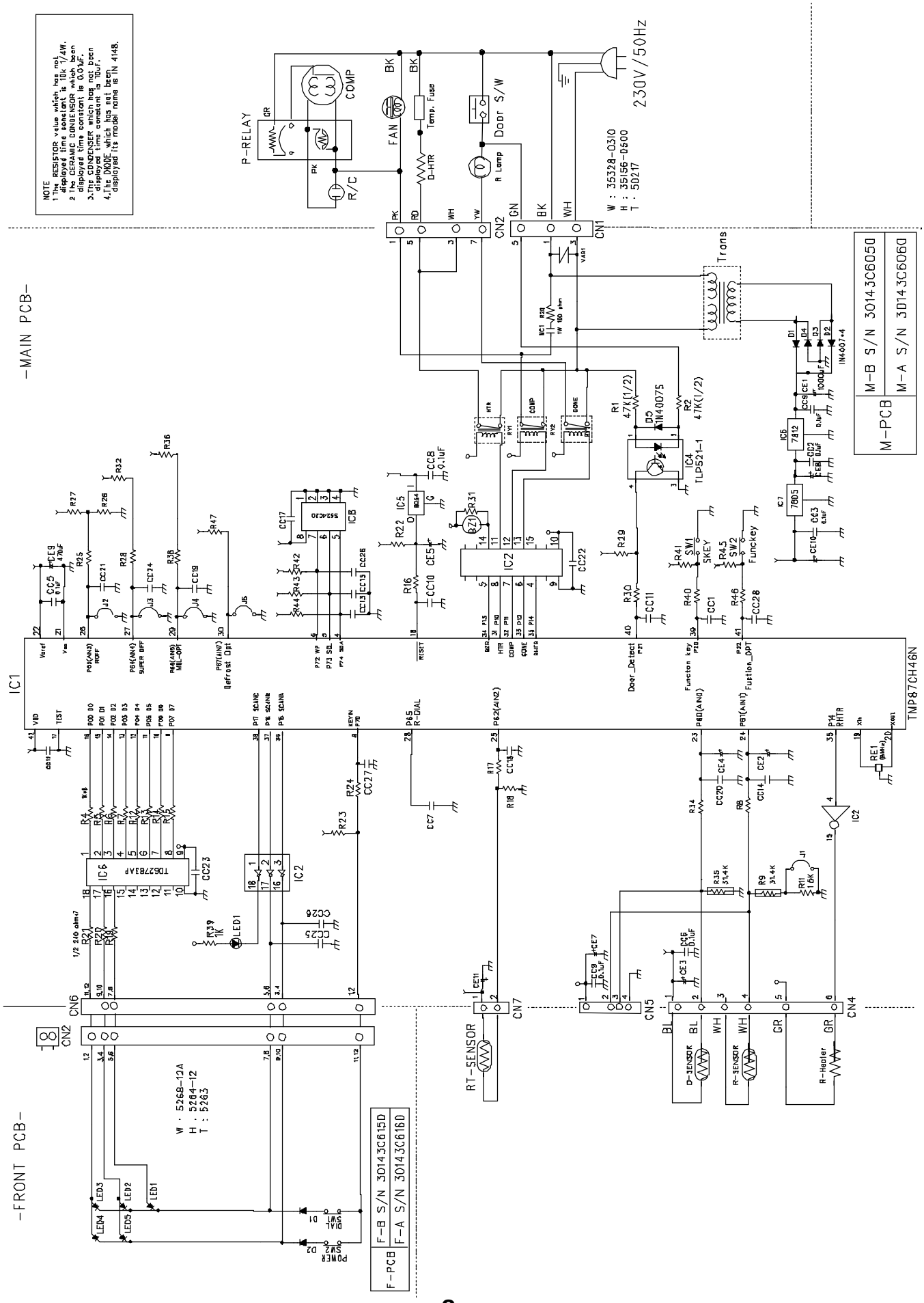

8. DOOR POSITION CHANGE PROCESS

STEP 1 : Remove door

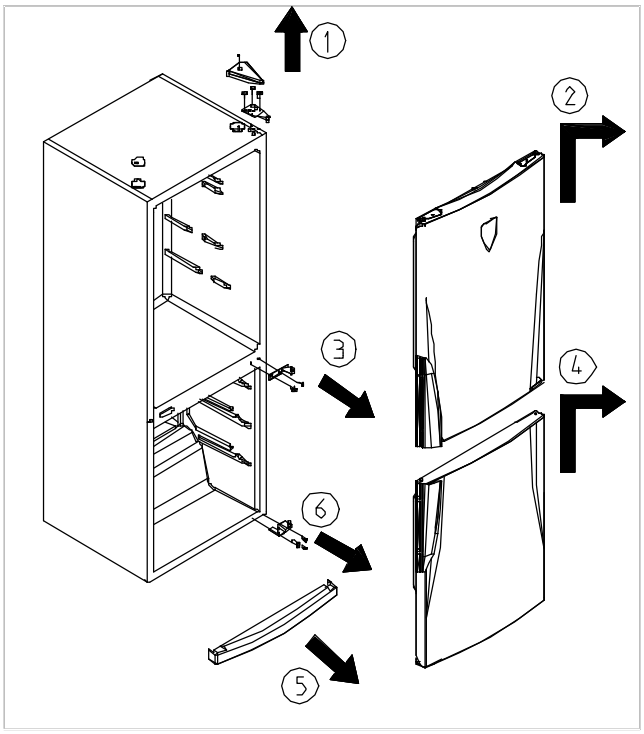

Follow to remove

1. Remove“ COVER HINGE” and “ HINGE T”

2. Remove“ R” door.

3. Remove “ HINGE M”

4. Remove“ F” door

5. Remove“COVER BRACKET”

6. Remove“ HINGE U”

STEP 2 : Change door handle

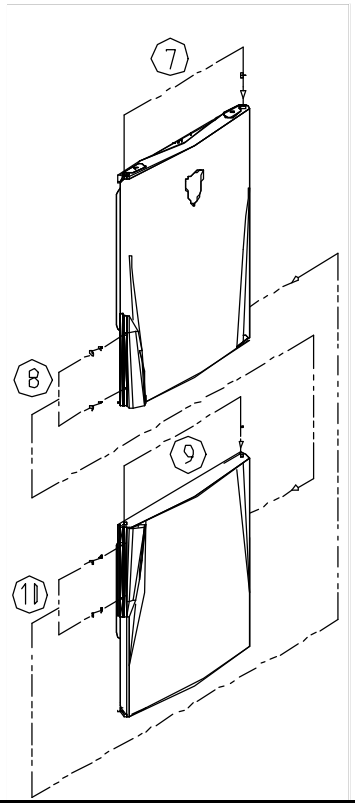

7. Reverse the position of“ COVER BUSHING”

8. Move “ R DOOR HANDLE” to “ F DOOR”

9. Reverse the position of“ CAP DR BUSHING”

10. Move “ F DOOR HANDLE” to “ R DOOR”

STEP 3 : Change door open side

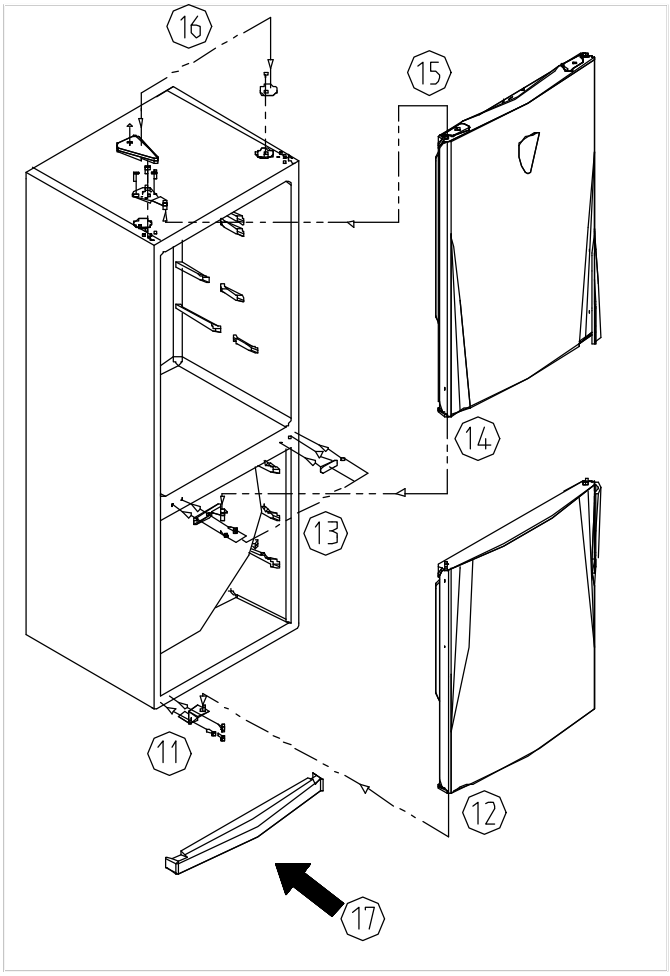

11. Attach the " HINGE U" on the left.

12. Attach the " F DOOR"

13. Reverse the position of " HINGE M" and
" CAP SCREW HOLE"

1. Attach the " R DOOR"

15. Attach the " HINGE T" on the left of cabinet
after assembling to " R DOOR"

16. Reverse the position of " COVER HINGE "
and " COVER CAB HARNESS"

9. EXPLODE DRAWING

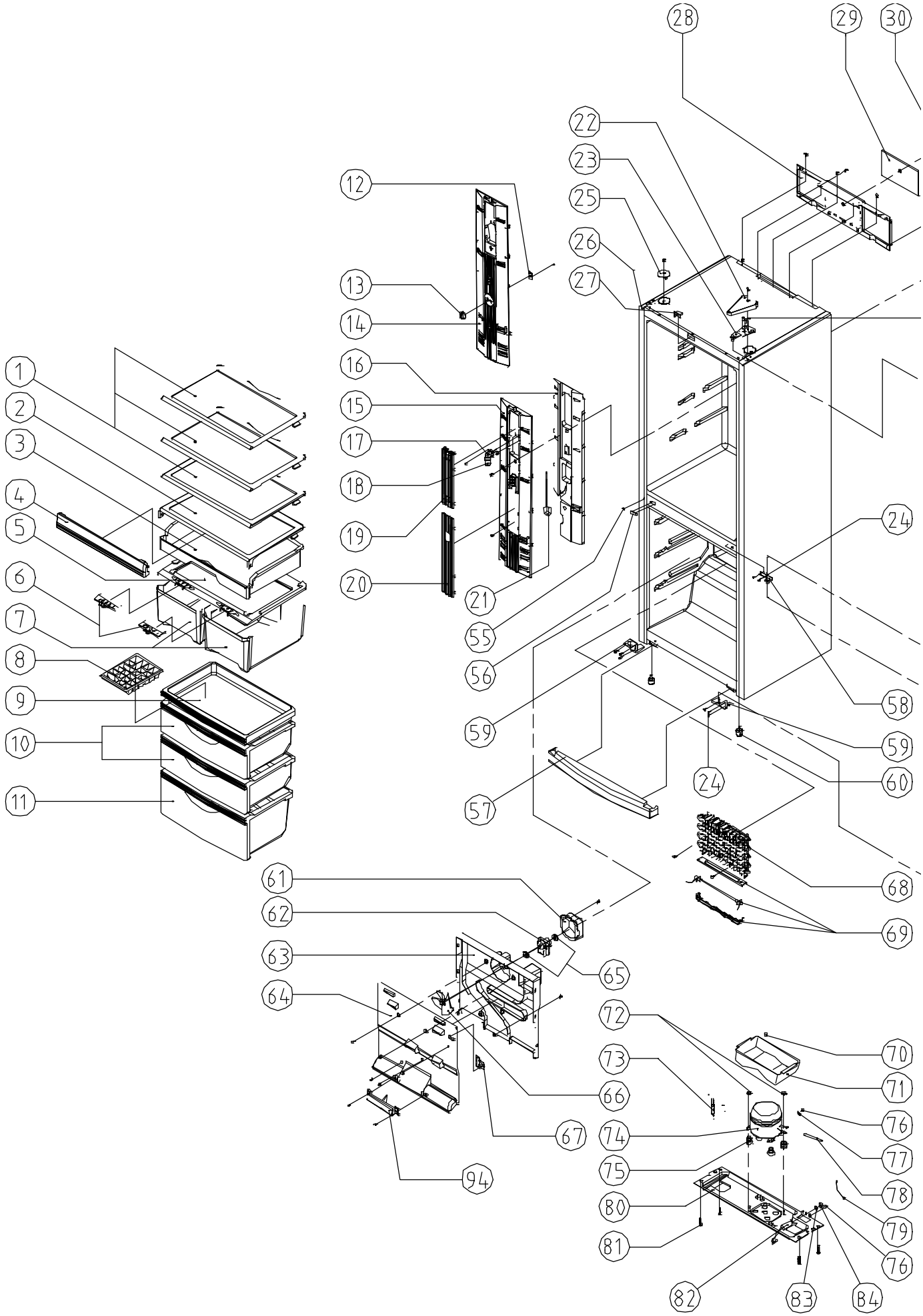

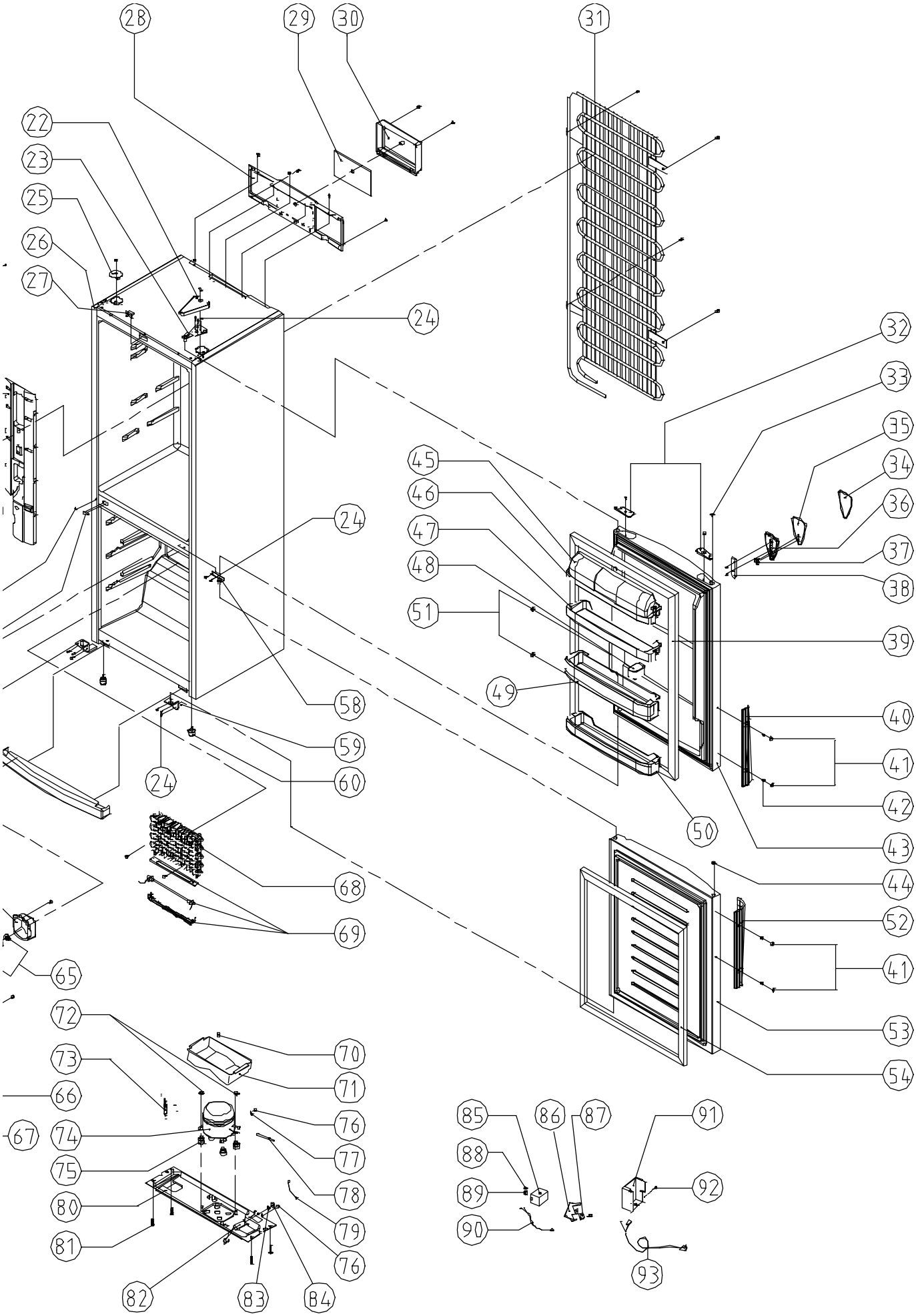
28
29
30
31
22
23
25
26
27
24
32
33
35
34
36
37
38
45
46
47
48
51
39
49
24
58
59
60
24
40
41
42
50
43
44
52
41
53
54
68
69
65
72
70
73
71
66
76
67
74
77
75
78
80
79
81
76
82
83
84
85
86
87
91
88
89
92
90
93

10. PARTS LIST

NO	PART NAME PART CODE	ERF-386A							
1	SHELF GLAS AS	3017839400							
2	COVER GLAS C/C AS	3011497900							
3	CASE CHILD	3011181400							
4	DOOR CHILLED CASE	3011760500							
5	COVER VEGTB CASE	3011497700							
6	KNOB HUMIDITY	3013410800							
7	CASE VEGETABLE *L	3011181900							
	CASE VEGETABLE *R	3011182000							
8	CASE ICING	3011163200							
9	CASE F D	3011181800							
10									
	CASE F C AS	3011185000							
11	CASE F A AS	3011184800							
12	V-PCB AS	30143C6260							
15	COVER MULTI DUCT	3011495600							
16	INSU MULTI DUCT	3013353800							
17	SOCKET LAMP AS	3017903900							
18	LAMP	3013600700							
19	WINDOW R	3015510100							
20	DECO M/DUCT COVER	3011633200	-						
21	SENSOR R AS	3012731800	1	1	1	1	1	1	
22	COVER *T HINGE	DMS1494310	1	1	1	1	1	1	SNOW WHITE
		DMS1494320	1	1	1	1	1	1	03 SILVER
23	HINGE *T AS	3012922600							
24	SPECIAL BOLT C	3016004900							
25	COVER CAB HARNESS	DMS1477510	1	1	1	1	1	1	SNOW WHITE
		DMS1477520	1	1	1	1	1	1	03 SILVER
27	SWITCH DOOR	3011755200	1	1	1	1	1	1	WHITE
		3011762900	1	1	1	1	1	1	03 SILVER
28	BOX PCB	3010545300	1	1	1	1	1	1	03 SILVER
		DMS0545310	1	1	1	1	1	1	SNOW WHITE
29	M-PCB AS	30143C6060							
30	COVER PCB BOX	3011477600	1	1	1	1	1	1	03 SILVER
		DMS1477610	1	1	1	1	1	1	SNOW WHITE
31	PIPE WI-CON AS	3014434500							
32	COVER HRNS*R	3011477100	1	1	1	1	1	1	03 SILVER
		DMS1477110	1	1	1	1	1	1	SNOW WHITE
	COVER HRNS*L	3011477200	1	1	1	1	1	1	03 SILVER
		DMS1477210	1	1	1	1	1	1	SNOW WHITE
33	COVER BUSH	3011498200	1	1	1	1	1	1	03 SILVER
		DMS1498210	1	1	1	1	1	1	SNOW WHITE
35	WINDOW FCP A	3015509900							
36	PANEL *F CONTROL	3014234000	-	1	-	1	-	1	03 SILVER
		DMS4234010	-	1	-	1	-	1	SNOW WHITE

NO	PART NAME PART CODE	ERF-386A							REMARK
37	BUTTON F-CP	3016304300							
38	F-PCB AS	30143C6160							
39	GASKET R DOOR AS	3012306600							
40	HANDLE R	3012640000	1	1	1	1	1	1	03 SILVER
		DMS2640010	1	1	1	1	1	1	SNOW WHITE
41	COVER HNDL SCREW	3011495200	4	4	4	4	4	4	03 SILVER
		DMS1495210	4	4	4	4	4	4	SNOW WHITE
42	SPECIAL SCREW	3016033600							
43	ASSY R DR A/S 386A SW	DMS0060000	-		-	-	-	-	GRIP S-WHITE
	ASSY R DR A/S 386A SV	DMS0060010	-		-	-	-	-	GRIP SILVER
	ASSY R DR AS 386A	DMS0060020							INOX
44	CAP DR BUSHING	3010967400	1	1	1	1	1	1	SNOW WHITE.
		DMS0967420	1	1	1	1	1	1	03 SILVER
45	COVER DAIRY POCKET	3011495000	1	1	1	1	1	1	BLUE MILKY
46	POCKET DAIRY	3019025000							
47	POCKET R	3019025200							
48	GUIDE BOTTLE POCKET	3012523800	1	1	1	1	1	1	BLUE MILKY
49	POCKET BOTL AS	3019026100	1	1	1	1	1	1	BLUE MILKY
50	POCKET MULTI AS	3019026200	1	1	1	1	1	1	BLUE MILKY
51	CAP HANDLE	3010910000	4	4	4	4	4	4	SNOW WHITE
		DMS0910030	4	4	4	4	4	4	03 SILVER
52	HANDLE F	3012639800	1	1	1	1	1	1	03 SILVER
		DMS2639810	1	1	1	1	1	1	SNOW WHITE
53	ASSY F DR AS	DMS0062140							INOX
	ASSY F DR A/S 386 SW	DMS0062120	-	-	-	-	1	1	GRIP S-WHITE
	ASSY F DR A/S 386 SV	DMS0062130	-	-	-	-	1	1	GRIP SILVER
54	GASKET F DOOR AS	3012306700							
57	COVER CAB BR.	DMS1494920							INOX
55	CAP SCREW	3010920200	1	1	1	1	1	1	SNOW WHITE
57	COVER CAB BR	DMS0920220	1	1	1	1	1	1	03 SILVER
56	CAP SCREW HOLE	3010920300							
57	COVER CAB BRACKET	3011494900	1	1	1	1	1	1	SNOW WHITE
		DMS1494910	1	1	1	1	1	1	03 SILVER
58	HINGE *M	3012908002							
59	HINGE *U	DMS2908201							
60	FOOT ADJUSTING AS	3012101800							
61	BRACKET FAN MOTOR	3010615600							
62	MOTOR FAN AS	3011804710							
63	LOUVER F B	3018919000							
64	LOUVER F A	3018918800							
65	BUSHING FAN MOTOR	3010701800							
66	FAN	3011801410							
67	KNOB F LOUVER	3013410700							
68	EVAPORATOR AS	3017045600							
69	HEATER D AS	3012807651							
70	CAP DRAIN HOSE	3010919700							

NO	PART NAME PART CODE	ERF-386A	MODEL						REMARK
71	CASE VAPORY	3011162700							
72	FIXTURE COMP	3012005300							
73	DRYER ASSY	3016802203							
74	COMPRESSOR	DMS0A00100							
75	ABSORBER COMP	3010103400							
76	SCREW MACHINE	DMS1B00100							
77	SPECIAL WASHER	DMS1B00200							
78	PIPE CHARGE	3014418211							
79	HARNESS EARTH	3012735220							
81	SPECIAL SCREW A	3016004300							
82	CAPACITOR RUN	DMS6402129							
83	SPECIAL WASHER R/C	DMS6006510							
84	SPECIAL NUT R/C	DMS6006410							
85	RELAY BOX	DMS0527900							
86	CLAMP CORD A	DMS1200100							
87	CLAMP CORD B	DMS1200200							
88	SWITCH P RELAY OL	DMS1A00100							
89	SWITCH P RELAY PTC	DMS1C00100							
90	HARNESS RELAY	3012731901							
91	COVER MECH HOUSING	3011454100							
92	SCREW TAPPING	7112401011							
93	CORD POWER AS	3011343340							
94	LOUVER F C	3018920700							

11. PCB CONTROL FUNCTION

11.1. ERF-XXXA

NO	FUNCTION	CONTENTS
1.	DISPLAY	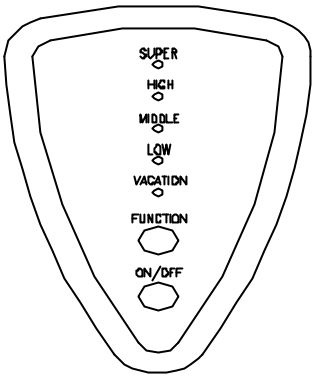 1) VAC STEP LED ON: WHEN TEMP CONTROL S/W IS PRESSED 1 TIME. 2) LOW STEP LED ON: WHEN TEMP CONTROL S/W IS PRESSED 2 TIMES. 3) MID STEP LED ON: WHEN TEMP CONTROL S/W IS PRESSED 3 TIMES. 4) HIGH STEP LED ON: WHEN TEMP CONTROL S/W IS PRESSED 4 TIMES. 5) SUPER STEP LED ON: WHEN TEMP CONTROL S/W IS PRESSED 5 TIMES. 6) ERROR LED DISPLAY (ON MAIN PCB)

DISPLAY	Led Output Wave Form
D1 ERROR	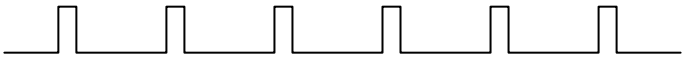
D2 ERROR	
R1 ERROR	
RT ERROR	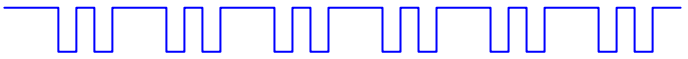
EP ERROR	
DR ERROR	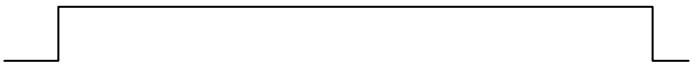

? FUNCTION DISPLAY

- D1 ERROR : LED is off & on one time.
- D2 ERROR : LED is off & on two times.
- R1 ERROR : LED is on & off one time.
- RT ERROR : LED is on & off two times.
- EP ERROR : LED is on & off continually
- DR ERROR : LED is on continually
- FORCED DEFROST OF CONDITION:HIGH, LOW led Lamps are on
- SHORT CIRCUIT OFCONDITION:SUPER, MIDDLE, VAC led Lamps are on

2.	TEMPERATURE ADJUSTMENT & CONTROL	1) TEMP. CONTROL SWITCH 1.1- TEMP. CONTROL When TEMP CONTROL button is pressed, the led lamps MIDLE - HIGH - SUPER - VAC -LOW - MIDDLE will be on in sequence. TEMPERATURE will be set if the button doesn't get pressed again within 5 sec 1.2- FORCED DEFROST: will be start when this button pushed for over 5 seconds continuously. 1.3- SHORT CIRCUIT OPERATION: will be started and stopped when this button pushed over 30 times. 2) TEMPERATURE CONTROL 2.1- COMP will be controlled by the on/off condition of each mode. 2.2- STEP DIFF of ROOM R : Vac/Low - 1.75 deg, Low/Middle - 0.7deg, Mid/High - 1.05deg, High/Super - 1.4 deg 2.3- OFF point of ROOM R in MID position: -0.5°C 2.4- ON/OFF DIFF of ROOM R: 3°C 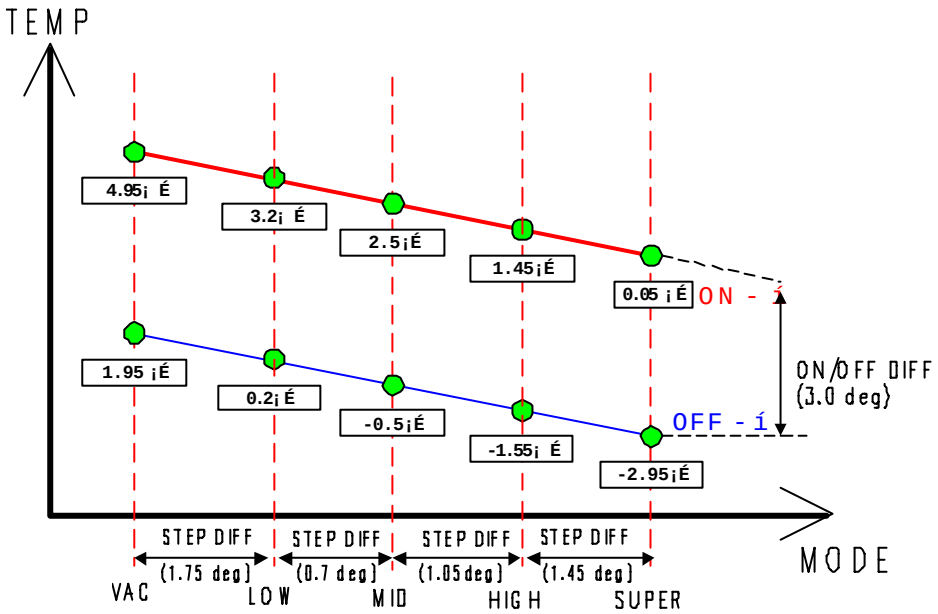 3) FORCED DEFROST 3.1- Defrost mode will be Started independent of the cycle. 3.2- The flow is same as the general defrost mode flow. 4) SHORT CIRCUIT OPERATION 4.1- COMP & FAN will be on independent of the operation condition. 4.2- The time limit of SHORT CIRCUIT OPERATION: 60 hrs
3.	VACATION	- Press TEMP. CONTROL SWITCH and make VAC led lamp on. ON POINT: 4.95°C OFF POINT: 1.95°C

<table>
<tr><td>4.</td><td>SUPER</td><td>- Press TEMP. CONTROL button and make SUPER led lamp on.
ON POINT: 0.05°C
OFF POINT: -2.95°C</td></tr>
<tr><td>5.</td><td>Determination of DEFROST</td><td>1) Starting condition of Defrost Mode
1.1- When accumulated running time of comp. Is 8, 10, 12, 18, 30hrs.
1.2- After Checking the condition ‘1.1’ if total time (COMP on time + COMP off time) is more than 24, 36, 48, 72hrs, then defrost mode starts immediately.
<table>
<tr><td rowspan="2">RT-SENSOR</td><td colspan="2">Accumulated running time of COMP</td><td colspan="2">Total running time of COMP</td></tr>
<tr><td>Door Open</td><td>Door Close</td><td>Door Open</td><td>Door Close</td></tr>
<tr><td>RT 29°C Up</td><td>8HR</td><td>18HR</td><td>24HR</td><td>36HR</td></tr>
<tr><td>20<RT< 28°C</td><td>12HR</td><td>30HR</td><td>48HR</td><td>72HR</td></tr>
<tr><td>15<RT< 19°C</td><td>8HR</td><td>12HR</td><td>24HR</td><td>36HR</td></tr>
<tr><td>RT 14°C Down</td><td>8HR</td><td>10HR</td><td>24HR</td><td>36HR</td></tr>
</table></td></tr>
<tr><td>6.</td><td>DEFROST MODE</td><td>1) General Defrost Mode
1.1- Start: By determination of defrost
1.2- Process: General operation- Heater on – Pause (6min) - General operation
-Heater defrosts: When the temperature at D-sensor is over 10°C, heater turns off.
-Limit time: 80 min (30 min on D SENSOR ERROR)
2) Forced Defrost Mode
2.1- Start: by press TEMP. CONTROL button for 5 seconds continuously.
2.2- Process: same as General Defrost Mode
-Heater is supposed to be on Initial 30 seconds. (for TEST)
2.3- Display : led lamps ‘LOW’ ‘HIGH’ is on.</td></tr>
<tr><td>7.</td><td>INITIAL DEFROST</td><td>1) When power is on, if the temperature at the D-sensor is under 3.5°C, then General Defrost Mode starts.
2) When initial defrost mode starts, heater will be on directly and defrost mode will be started.</td></tr>
<tr><td>8.</td><td>PREVENTION OF COMP. RESTART</td><td>COMP. doesn’t work after COMP. turns off even though R-sensor is on condition. (This is to protect comp.)
1) General operation : The COMP can’t be on within 6 min.
2) Operation of LOW RT : The COMP can’t be on within 40 min.</td></tr>
</table>

<table>
<tr>
<td>9.</td>
<td>ERROR
DISPLAY
&
CONTROL</td>
<td>
- ERROR DISPLAY
- When error happens, it is displayed on led lamp.(Main PCB LED 1)

1) R1 ERROR (It happens when R-SENSOR is OPEN or SHORT)
1.1- DISPLAY : On & off one time while LED is on.
1.2- CONTROL : Controlled by the condition of RT
(Unit : min)
<table>
<tr><td>RT-S TEMP</td><td>RT-S ERROR</td><td>19ºC Down</td><td>20ºC Up</td></tr>
<tr><td>COMP. Operating TIME (ON / OFF)</td><td>20 / 30</td><td>15 / 35</td><td>22 / 28</td></tr>
</table>
1.3- CANCEL : when R-SENSOR is working normally.
2) D1 ERROR (It happens when D-SENSOR is OPEN or SHORT)
2.1- DISPLAY : On & off one time while LED is off.
2.2- CONTROL : Return to the limit defrost time of Defrost (30 min)
3) D2 ERROR (It happens when heater is off by time - 80 min).
3.1- DISPLAY : On & off two times while LED is off.
3.2- CONTROL : Return to next limit defrost time (80 min)
4) RT ERROR (It happens when RT-SENSOR is OPEN or SHORT)
4.1- DISPLAY : On & off two times while LED is on.
4.2- CONTROL : The system is normally operating but the controlling by RT-SENSOR doesn't work.
4.3- CANCEL : when RT-SENSOR is working normally.
5) DR ERROR
5.1- Display : LED is on continuously
5.2- Control : Deletion of function related door switch sensing
5.3- If door switch (open & close) is sensed, the error is terminated automatically
</td>
</tr>
<tr>
<td>10.</td>
<td>SHORT CIRCUIT
TEST</td>
<td>
1) START : by pressing REF.TEMP. CONTROL button 30 times continuously.
2) CANCEL : by pressing TEMP CONTROL button 30 times continuously.
Cf. the system generally operates after the limit t ime 60 hrs. passes.
3) DISPLAY : LED lamps are SUPER, MIDDLE, VAC on
4) CONTROL : COMP & FAN will be on independent of the operating condition.
(There is no defrost mode on this test.)
</td>
</tr>
<tr>
<td>11.</td>
<td>FUNCTION
OF
TIME REDUCTION</td>
<td>
1) HOW TO REDUCE: (There is no FASTKEY on PCB for MP.)
1 min : Click FAST KEY one time
30 min : If you press FAST KEY continuously, you can reduce 30 minutes on each second.
2) Practical Use : Can be applied to reduce needless time on test.
EX) function of stop for 6 min
</td>
</tr>
</table>

12.	POWER ON / OFF	1) START : Press POWER button 2) CANCELATION : Press POWER button again 3) DISPLAY - START : All LED lamps are off and power is off.(COMP, Heater, Lamp of Room) - CANCEL : Return to the last condition(dial)
13.	MEMORY SAVING ON POWER FAILURE	-After power failure or momentary power failure happens, if power is back on, the mode will be returned on last condition.
14.	EEPROM CLEAR	-Make EEPROM clear right before shipping(set the initial mode) -How to clear : press REF.TEMP. button 5 time with pressing POWER button.
15.	FUNCTION OF LOW ROOM TEMPERATURE	1) Condition of LOW RT TEMP : 1.1- LOW RT A : RT SENSOR < 14ºC 1.2- LOW RT B : 15ºC > RT-S < 19ºC 2) Control 2.1- When Comp. is on, R-SENSOR HTR is off. When it passes 6 min after COMP. is off, R-SENSOR HTR is on until COMP is on. 2.2- COMP. Can't be on within 40 min. after COMP. is off. 2.3- When it is not the Mode of LOW ROOM TEMP. or RT-SENSOR is on ERROR(open or short), R-SENSOR HTR is off. - LOW RT TEMP A Condition - R-SENSOR Operating Temperature1ºC up - LOW RT TEMP B Condition R-SENSOR Operating Temperature

16. R-SENSOR OFF POINT ADJUSTING OPTION

1) R-SENSOR OFF POINT can be adjusted by changing the input voltage of MICOM 26 pin.

2) The default of input voltage is 0V.

3) The changed OFF POINT is base OFF POINT + OFF POINT of input voltage.

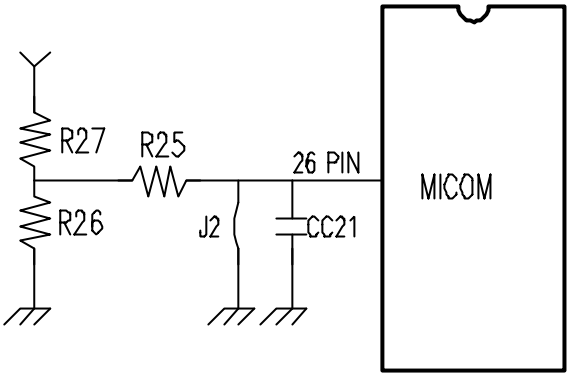

4) The change of R-SENSOR OFF POINT depend on the input voltage of MICOM

MICOM Input (V)	0	1.0	1.5	2.0	2.5	3.7	5.0
OFF POINT Variation (ºC)	-0.5ºC (DEF)	1.0ºC down	2.0ºC down	3.0ºC down	1.0ºC up	2.0ºC up	3.0ºC up
R26, R27 Resistance (kOhms)	Jumper adoption	R27 : 40 R26 : 10	R27:23.3 R26:10	R27:15 R26:10	R27:10 R26:10	R27:3.5 R26:10	R27:10 R26:DEL

5) APPLICATION (MAIN PCB)

5.1- GENERAL: MICOM 26 port - 0V

5.2- DELETE J2 (CHANGING R OFF POINT 1DEG UP) : MICOM 26 port– 2.5V

LOW COOLING OPTION

- R-SENSOR OFF POINT ADJUSTMENT (1 DEG. DOWN)
- J1 DELETION on LOW COOLING OPTION

Default resistance (31.4 Kohms) + 1.5 kohms = 32.9 Kohms

Operating on condition that R-SENSOR OFF point goes down 1ºC.