SAM4S

POS SYSTEM

SPS-500 SERIES

SERVICE Manual

SPS-500 Series

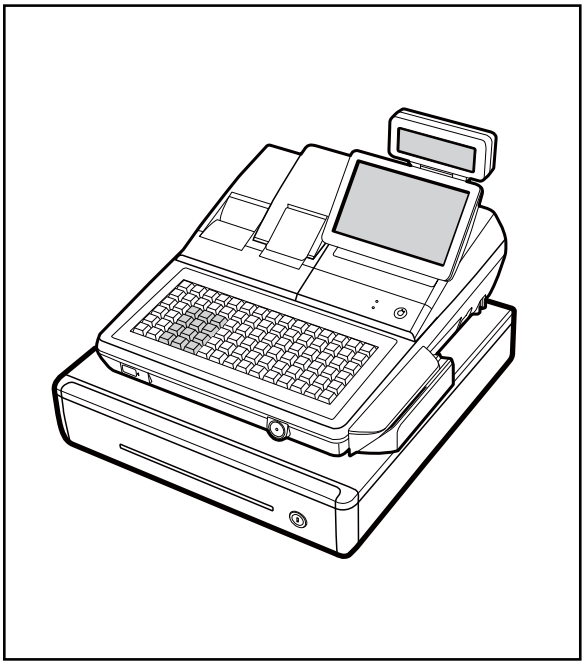

C O N T E N T S

Overview of this POS System

This service manual provides the technical information for many individual component systems and circuits and gives an analysis of the operations performed by the circuits. Schematics and specifications provide the needed information for the accurate troubleshooting.

All information in this manual is subject to change without prior notice. Therefore, you must check the correspondence of your manual with your machine. No part of this manual may be copied or reproduced in any form or by any means, without the prior written consent of Shin Heung Precision.

Note: Before using this POS system for the first time, leave it powered on in the REG mode for at least twenty-four hours. This allows the Ni-MH battery, which maintains the memory of the POS while the power is off, to charge completely. Proper disposal of batteries is required. Refer to your local codes for disposal requirements.

About this Manual

This service manual describes how to perform hardware service maintenance for the SAM4S SPS-500 Series POS System

Notes

Notes may appear anywhere in the manual. They describe additional information about the item.

Precaution symbols

⚠. Indicates a Safety Precaution that applies to this part component.

⚠. Indicates the part or component is an electro-statically sensitive device. Use caution when handling these parts.

SAM4S SPS-500 SERIES

Aug. 2009.

V1.1

Printed in KOREA

1 Precaution Statements

Follow these safety, servicing and ESD precautions to prevent damage and to protect against potential hazards such as electrical shock.

1-1 Safety Precautions

1. Be sure that all built-in protective devices are replaced. Restore any missing protective shields.
2. When reinstalling the chassis and its assemblies, be sure to restore all protective devices, including nonmetallic control knobs and compartment covers.
3. Make sure there are no cabinet openings through which people - particularly children - might insert fingers and contact dangerous voltages. Such openings include excessively wide cabinet ventilation slots and improperly fitted covers and drawers.
4. Design Alteration Warning:
   Never alter or add to the mechanical or electrical design of the POS. Unauthorized alterations might create a safety hazard. Also, any design changes or additions will void the manufacturer's warranty.
5. Components, parts and wiring that appear to have overheated or that are otherwise damaged should be replaced with parts that meet the original specifications. Always determine the cause of damage or over- heating, and correct any potential hazards.
6. Observe the original lead dress, especially near the following areas : sharp edges, and especially the AC and high voltage supplies. Always inspect for pinched, out-of-place, or frayed wiring. Do not change the spacing between components and the printed circuit board. Check the AC power cord for damage. Make sure that leads and components do not touch thermally hot parts.
7. Product Safety Notice:
   Some electrical and mechanical parts have special safety-related characteristics which might not be obvious from visual inspection. These safety features and the protection they give might be lost if the replacement component differs from the original - even if the replacement is rated for higher voltage, wattage, etc.

   Components that are critical for safety are indicated in the circuit diagram by shading, (⚠) or (⚠). Use replacement components that have the same ratings, especially for flame resistance and dielectric strength specifications. A replacement part that does not have the same safety characteristics as the original might create shock, fire or other hazards.

CAUTION

Danger of explosion if battery is incorrectly replaced.

Replace only with the same or equivalent type recommended by the manufacturer.

Dispose used batteries according to the manufacturer's instructions.

ATTENTION

Il y a danger d'explosion s'il y a remplacement incorrect de la batterie.

Remplacer uniquement avec une batterie du même type ou d'un type équivalent recommandé par le constructeur.

Mettre au rebut les batteries usagées conformément aux instructions du fabricant.

1-2 Servicing Precautions

WARNING: First read the-Safety Precautions-section of this manual. If some unforeseen circumstance creates a conflict between the servicing and safety precautions, always follow the safety precautions.
WARNING: An electrolytic capacitor installed with the wrong polarity might explode.

1. Servicing precautions are printed on the cabinet. Follow them.
2. Always unplug the units AC power cord from the AC power source before attempting to:
   (a) Remove or reinstall any component or assembly (b) Disconnect an electrical plug or connector (c) Connect a test component in parallel with an electrolytic capacitor
3. Some components are raised above the printed circuit board for safety. An insulation tube or tape is sometimes used. The internal wiring is sometimes clamped to prevent contact with thermally hot components. Reinstall all such elements to their original position.
4. After servicing, always check that the screws, components and wiring have been correctly reinstalled. Make sure that the portion around the serviced part has not been damaged.
5. Check the insulation between the blades of the AC plug and accessible conductive parts (examples : metal panels and input terminals).
6. Insulation Checking Procedure:
   Disconnect the power cord from the AC source and turn the power switch ON. Connect an insulation resistance meter (500V) to the blades of AC plug.

   The insulation resistance between each blade of the AC plug and accessible conductive parts (see above) should be greater than 1 megaohm.
7. Never defeat any of the B+ voltage interlocks. Do not apply AC power to the unit (or any of its assemblies) unless all solid-state heat sinks are correctly installed.
8. Always connect an instrument's ground lead to the instrument chassis ground before connecting the positive lead ; always remove the instrument's ground lead last.

1-3 Precautions for Electrostatically Sensitive Devices (ESDs)

1. Some semiconductor (solid state) devices are easily damaged by static electricity. Such components are called Electrostatically Sensitive Devices (ESDs); examples include integrated circuits and some field-effect transistors. The following techniques will reduce the occurrence of component damage caused by static electricity.
2. Immediately before handling any semiconductor components or assemblies, drain the electrostatic charge from your body by touching a known earth ground. Alternatively, wear a discharging wrist-strap device. (Be sure to remove it prior to applying power - this is an electric shock precaution.)
3. After removing an ESD-equipped assembly, place it on a conductive surface such as aluminum foil to prevent accumulation of electrostatic charge.
4. Do not use freon-propelled chemicals. These can generate electrical charges that damage ESDs.
5. Use only a grounded-tip soldering iron when soldering or unsoldering ESDs.
6. Use only an anti-static solder removal device. Many solder removal devices are not rated as anti-static; these can accumulate sufficient electrical charge to damage ESDs.
7. Do not remove a replacement ESD from its protective package until you are ready to install it. Most replacement ESDs are packaged with leads that are electrically shorted together by conductive foam, aluminum foil or other conductive materials.
8. Immediately before removing the protective material from the leads of a replacement ESD, touch the protective material to the chassis or circuit assembly into which the device will be installed.
9. Minimize body motions when handling unpackaged replacement ESDs. Motions such as brushing clothes together, or lifting a foot from a carpeted floor can generate enough static electricity to damage an ESD.

2 Product Specifications

[SPS-520 PART]

Specifications are correct at the time of printing.
Product specifications are subject to change without notice. See below for product specifications.

2-1 General Specifications

Item	Description	Remark
Processor	• S3C2440 (SEC)	
Memory	• BIOS : FLASH 1MByte • SYSTEM : 64MByte SDRAM • DATA : 2MByte [option : 6MByte] =>Total : 8MByte	
Battery	• Type : Lithium, 3V 65mAh • Charging Time : 24 Hours • Life : 3 Years	
Data Storage	• 90 Days	When battery is Full charged
Interface Serial (RS-232C)	• Flow Control : ① DTR / DSR : H/W Flow Control ② XON / XOFF : S/W Flow Control • Baud Rate : 1200/2400/9600/19200/38400/57600/115200 Bps • Voltage Supply : VCC(+5V/1A) supplies at RS-232C#1~#4	RS-232C #1(DSUB-9) RS-232C #2(DSUB-9) RS-232C #3(RJ45) RS-232C #4(RJ45)
LAN	• 10/100 base-T ETHERNET(TCP/IP, 32REG)	
SD CARD	• 1-Slot(2GByte_max)	
MSR	• 1-Slot [option]	
DRAWER	• 3-PORT [Default (internal) #1 / RJ-45 #2,#3]	
i-BUTTON	• Magnetic [option]	
USB	• 2-Port [HOST]	
Printer	• Model : STM-210II (Shinheung) • Printing Speed : 80mm / Sec	Detail Spec refer to Next Page
Auto Cutter	• Type : Guillotine • Cutting Method : 1 Point Partial Cutting	
Display	• Operator Display : 7” TFT-LCD(800*480) • Customer Display : 16char*2line LCD	
Key Board	• Flat Rubber Key : 160 Key • Raised Key : 90Key	
Power Consumption	• Approx. 40W (Regularity)	
Power Requirement	• AC 100~240V 50/60Hz [AC/DC Adaptor(24V/2.5A) Internal]	
Environment Condition	• Temperature : 0℃ ~ 45℃ • humidity : 30% ~ 80% RH	
Weight	• Approximately 12Kg (Net)	
Dimensions(mm)	• 430(W) × 468(L) × 344(H) : With A+ Drawer • 400(W) × 468(L) × 344(H) : With G Drawer	Set Size

Table2-1 General Specifications (SPS-520)

2-2 Appearance

2-2-1 Appearance Dimensions (mm)

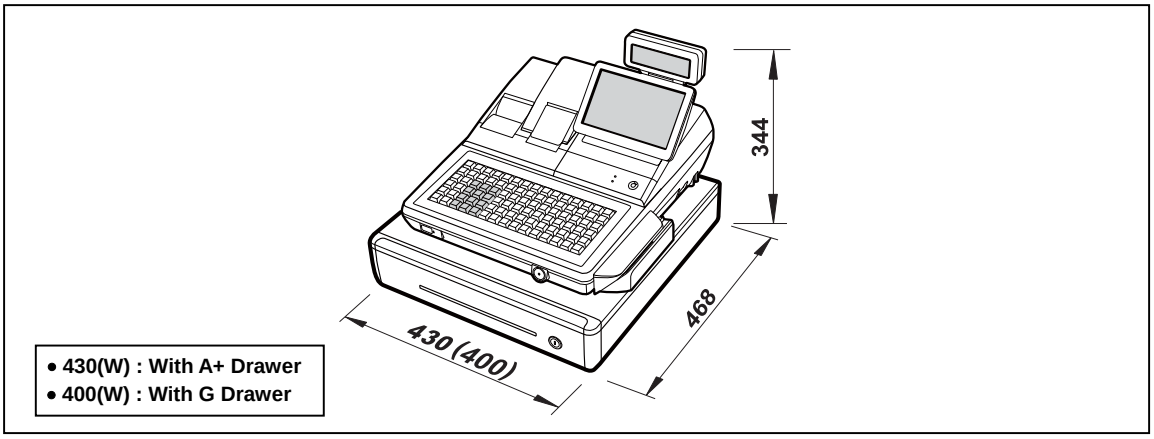

Figure2-1 Dimensions (SPS-520)

2-2-2 Location Features

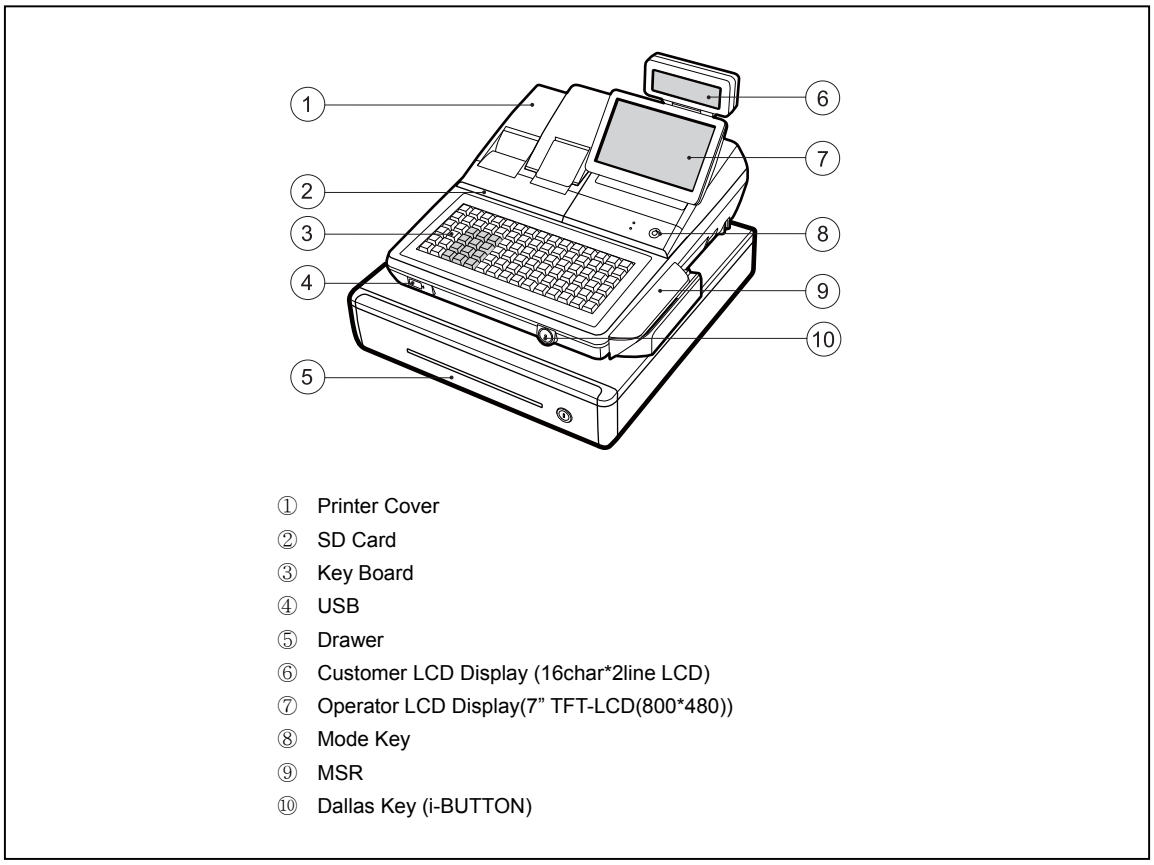

Figure2-2 Location Features (SPS-520)

2-3 Thermal Printer Specifications

2-3-1 Printer Specification (2”)

Item		Description	Remark
Model		• STM-210II	ShinHeung Precision
Print Method		• Thermal Line Printing	
Printing Format	Total Number of Dots	• 384 Dots / I Line	
	Dot Pitch	• Vertical : 0.125 mm • Horizontal : 0.125 mm	
Printing Speed		• 80 mm/Sec (At 24V of Motor Voltage)	
Printing Direction		• Unidirectional Friction Feed	
Paper Feeding	Feeding Method	• Friction Feed	
	Minimum Feed Pitch	• 0.0625 mm	
	Feeding Speed	• 80 mm/Sec (At 24V of Motor Voltage)	
Power Supply Volt	Power Voltage	• 24V / 24V (Recommend)	Head/Motor
	Circuit Input Voltage	• 5V	Head Control/Sensor
Printer Head	Heat Element Density	• 8 Dots/mm (200dpi)	
	Total Head Elements	• 384 Dots / Dot Line	
	Available Printing Width	• 48 mm	
	Heat Element Typical Ω	• 1500 Ω ±3%	
Line Feed Motor		• 4-Phase Uni-Polar Stepping Motor	
Sensor	Head Temperature	• Thermistor	
	Paper-End Sensor	• Reflecting Photo Sensor	
	Printer Cover Open Sensor	• Micro Switch	
Auto Cutter	Type	• Guillotine Type	Shin Heung Precision
Reliability	MCBF	• 30,000,000 Lines	
	Auto-cutter	• 1,000,000 Cuts	
Dimension (mm)		• 82.5 (W) ×147.3 (D) ×101.4 (H)	
Weight		• Approx. 365 g	

Table2-2 Thermal Printer Specifications (SPS-520)

2-3 Thermal Printer Specifications

2-3-2 Paper Specification

Item	Description	Remark
Paper Type	• Single-ply Thermal Paper Roll	
Paper Size	• 57.5 mm ± 0.5 mm (Width) ×80 mm or less	
Specified Paper	• Original Paper No : HPK-110 (Hansol paper XT)	

Table2-3 Paper Specification (SPS-520)

Note: The following paper can be used instead of the specified paper above.

TF50KS-E: Nippon paper industries Co.,Ltd.

PD 160R : New Oji paper Mfg, Co.,Ltd.

F380 : Kansaki specialty papers, Inc. (USA)

2-3-3 Printable Area

The Printable area of a paper with width of 57.5mm is 48mm(384 dots) and the space on the right and left sides are approximately 4.75mm.

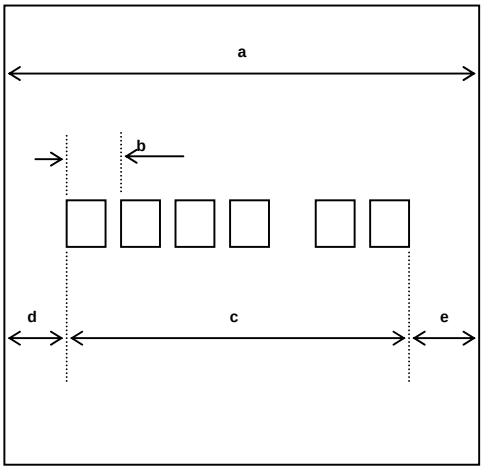

a = 57.5±0.5 ㎜ (Paper Width)

b = 0.125 ㎜ (1 Dot)

c = 48 ㎜ (384 Dots/Printable Area)

d = 4.75 ㎜ (Left Space)

e = 4.75 ㎜ (Right Space)

Figure2-3 Printable Area (SPS-520)

2-3-4 Character Specification

Item	Description	Remark
Character Structure	• 12(W) × 24(H) Font (Including a Horizontal)	
Character Size	• 1.25 mm(W) ×3.0 mm(H)	
Column Pitch	• 1.5 mm	
Line Pitch	• 3.75 mm (Including 6-dot Line Spacing)	
Number of Column	• 32 (12×24 Dots/Character)	

Table2-4 Character Specification (SPS-520)

[SPS-530 PART]

Specifications are correct at the time of printing.
Product specifications are subject to change without notice. See below for product specifications.

2-1 General Specifications

Item	Description	Remark
Processor	• S3C2440 (SEC)	
Memory	• BIOS : FLASH 1MByte • SYSTEM : 64MByte SDRAM • DATA : 2MByte [option : 6MByte] =>Total : 8MByte	
Battery	• Type : Lithium, 3V 65mAh • Charging Time : 24 Hours • Life : 3 Years	
Data Storage	• 90 Days	When battery is Full charged
Interface Serial (RS-232C)	• Flow Control : ③ DTR / DSR : H/W Flow Control ④ XON / XOFF : S/W Flow Control • Baud Rate : 1200/2400/9600/19200/38400/57600/115200 Bps • Voltage Supply : VCC(+5V/1A) supplies at RS-232C#1~#4	RS-232C #1(DSUB-9) RS-232C #2(DSUB-9) RS-232C #3(RJ45) RS-232C #4(RJ45)
LAN	• 10/100 base-T ETHERNET(TCP/IP, 32REG)	
SD CARD	• 1-Slot(2GByte_max)	
MSR	• 1-Slot [option]	
i-BUTTON	• Magnetic [option]	
DRAWER	• 3-PORT [Default (internal) #1 / RJ-45 #2,#3]	
USB	• 2-Port [HOST]	
Printer	• Model : LTPF347E(SII) • Printing Speed : 100mm / Sec	Detail Spec refer to Next Page
Auto Cutter	• Type : Guillotine • Cutting Method : 1 Point Partial Cutting	
Display	• Operator Display : 7” TFT-LCD(800*480) • Customer Display : 16char*2line LCD	
Key Board	• Flat Rubber Key : 160 Key • Raised Key : 90Key	
Power Consumption	• Approx. 40W (Regularity)	
Power Requirement	• AC 100~240V 50/60Hz [AC/DC Adaptor(24V/2.5A) Internal]	
Environment Condition	• Temperature : 0℃ ~ 45℃ • humidity : 30% ~ 80% RH	
Weight	• Approximately 12Kg (Net)	
Dimensions(mm)	• 430(W) × 468(L) × 344(H) : With A+ Drawer • 400(W) × 468(L) × 344(H) : With G Drawer	Set Size

Table2-5 General Specifications (SPS-530)

2-2 Appearance

2-2-1 Appearance Dimensions (mm)

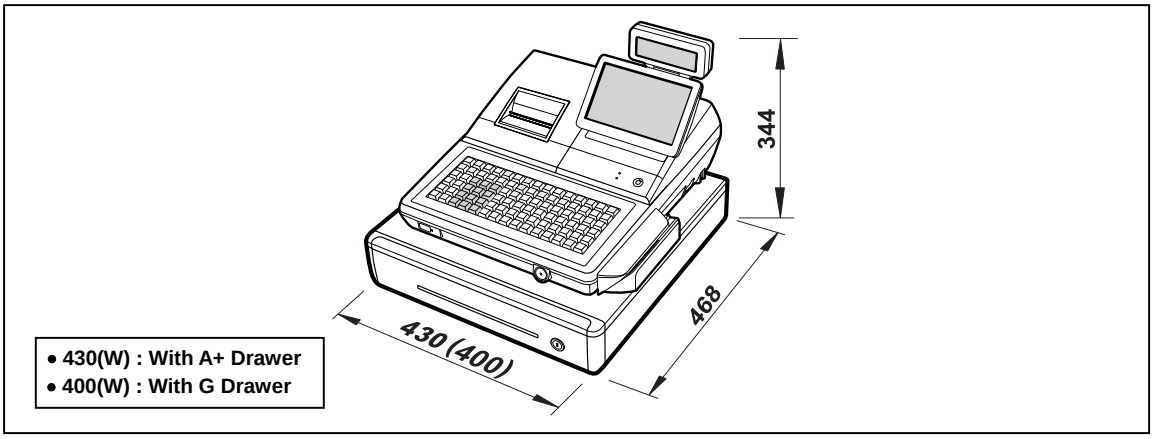

Figure2-4 Dimensions (SPS-530)

2-2-2 Location Features

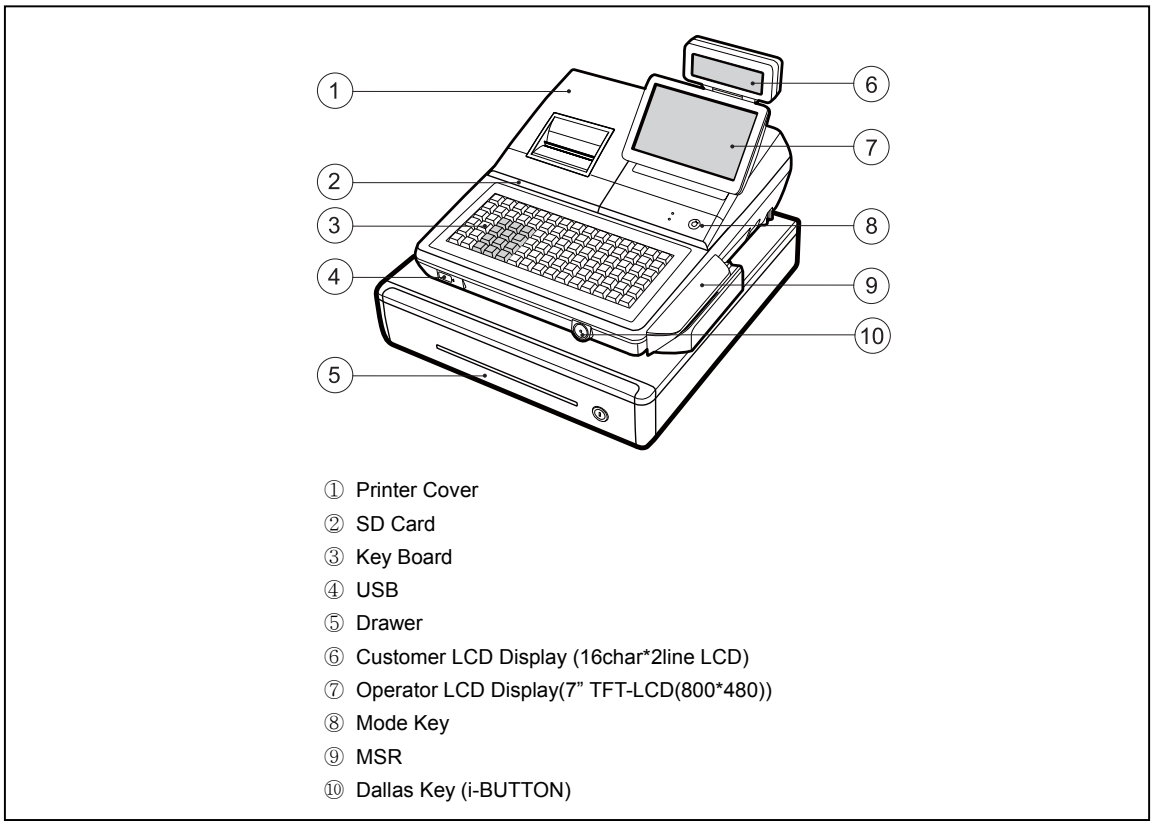

Figure2-5 Location Features (SPS-530)

2-3 Thermal Printer Specifications

2-3-1 Printer Specification (3”)

Item		Description	Remark
Model		• LTPF347E	SII
Print Method		• Thermal Line Printing	
Printing Format	Total Number of Dots	• 576 Dots / I Line	
	Dot Pitch	• Vertical : 0.125 mm • Horizontal : 0.125 mm	
Printing Speed		• 100 mm/Sec	
Printing Direction		• Unidirectional Friction Feed	
Paper Feeding	Feeding Method	• Friction Feed	
	Minimum Feed Pitch	• 0.0625 mm	
	Feeding Speed	• 100 mm/Sec	
Power Supply Volt	Power Voltage	• 24V/24V (Recommand)	Head/Motor
	Circuit Input Voltage	• 5V	Head Control/Sensor
Printer Head	Heat Element Density	• 8 Dots/mm (200dpi)	
	Total Head Elements	• 576 Dots/Dot Line	
	Available Printing Width	• 72 mm	
	Heat Element Typical Ω	• 1500 Ω ±3%	
Line Feed Motor		• 4-Phase Bi-Polar Stepping Motor	
Sensor	Head Temperature	• Thermistor	
	Paper-End Sensor	• Reflecting Photo Sensor	
	Printer Cover Open Sensor	• Micro Switch	
Auto Cutter	Type	• Guillotine Type	SII
Reliability	TPH	• 100Km , 1×10^8 Pulses	
	Auto-cutter	• 1,000,000 Cuts	Paper : PD-160R-N (Oji paper co.,Ltd)
Dimension (mm)		• 110.2 (W) ×54 (D) ×25.8 (H)	
Weight		• Approx. 175 g	

Table2-6 Thermal Printer Specifications (SPS-530)

2-3 Thermal Printer Specifications

2-3-2 Paper Specification

Item	Description	Remark
Paper Type	• Single-ply Thermal Paper Roll	
Paper Size	• 79.5 mm ± 0.5 mm (Width) ×80 mm or less	
Specified Paper	• Original Paper No : HPK-110 (Hansol paper XT)	

Table2-7 Paper Specification (SPS-530)

Note: The following paper can be used instead of the specified paper above.

TF50KS-E: Nippon paper industries Co.,Ltd.

PD 160R : New Oji paper Mfg, Co.,Ltd.

F380 : Kansaki specialty papers, Inc. (USA)

2-3-3 Printable Area

The Printable area of a paper with width of 79.5mm is 72.0mm(576 dots) and the space on the right and left sides are approximately 4.0mm.

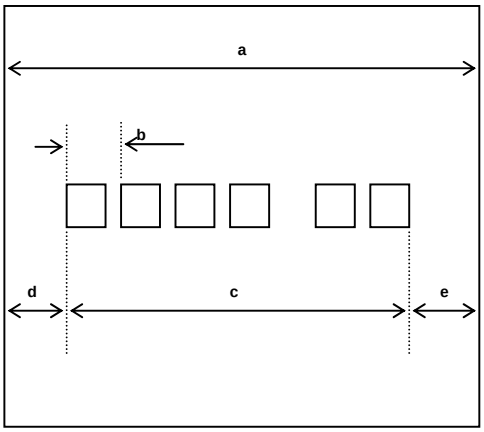

a = 79.5±0.5 ㎜ (Paper Width)

b = 0.141 ㎜ (1 Dot)

c = 72.0 ㎜(576 Dots/Printable Area)

d = 4.0 ㎜ (Left Space)

e = 4.0 ㎜ (Right Space)

Figure2-6 Printable Area (SPS-530)

2-3-4 Character Specification

Item	Description	Remark
Character Structure	• 12(W) × 24(H) Font (Including a Horizontal)	
Character Size	• 1.25 mm(W) ×3.0 mm(H)	
Column Pitch	• 1.5 mm	
Line Pitch	• 3.75 mm (Including 6-dot Line Spacing)	
Number of Column	• 32 (12×24 Dots/Character)	

Table2-8 Character Specification (SPS-530)

2-4 Power Specifications

2-4-1 Power Specification

Item	Description	Remark
Input Voltage & Current	• AC 100~240V, 800mA, 50/60Hz (Min : 90V, Max : 264V) [AC/Dc Adaptor(24V/2.5A) Internal]	
Power Consumption	• Peak : 50W	

Table2-9 Power Specification

2-5 Interface Specifications

2-5-1 RS-232C Serial Interface Specification

Item	Description	Remark
Data Transmission	• Serial Data Transmission	
Synchronization	• Asynchronous	
Hand Shaking (Flow Control)	• H/W : DTR / DSR • S/W : XON / XOFF	XON : ASC Code 11h XOFF : ASC Code 13h
Signal Level	• Logic"1" (MARK) : -3V ~ -15V • Logic"0" (SPACE) : +3V ~ +15V	
Baud Rate	• 2400 / 9600 / 19200 / 38400 / 57600 / 115200 bps	Default 9600 bps
Data Word Length	• 7 Bit / 8 Bit	
Parity	• None / Even / Odd	
Connector	• DB9P Male : COM#1, COM#2 • RJ-45 Modular Jack : COM#3, COM#4	
Voltage Supply	• VCC(+5V/1A):COM#1~#4 • VCC(+5V/1A):USB#1~#2	

Table2-10 RS-232C Serial Interface Specification

CAUTION :
"VCC" is supplied for the Barcode or other devices. Supply current 1A is total value including COM#1~COM#4.
If the Total Power Consumption exceeds specification (1A), the system cuts "VCC" of COM#1~COM#4.

"VCC " is supplied for the USB Device. Supply current 1A is total value including USB1#~USB#2.
If the total Power Consumption exceeds specification 1A, the system cuts "VCC" of USB#1~USB#2.

2-5 Interface Specifications

2-5-2 RS-232C Signal Description

PIN NO		Signal Name	Direction	Function
DSUB9(CN1)	RJ45(CN3)			
1	-	DCD	IN	Carrier Detect
2	4	RXD	IN	Receive Data
3	3	TXD	OUT	Transmit Data
4		DTR	OUT	Data Set Ready
5	7	GND	-	-
6		DSR	IN	Data Terminal Ready
7	8	RTS	OUT	Request To Send
8	2	CTS	IN	Clear To Send
		RI	IN	Ring Indicator
9	1	+5V/500mA	-	Total Power : 1A (COM#1,#2 : Pin9, COM#3 ,#4 : Pin1)

[DSUB9 CONNECTOR]

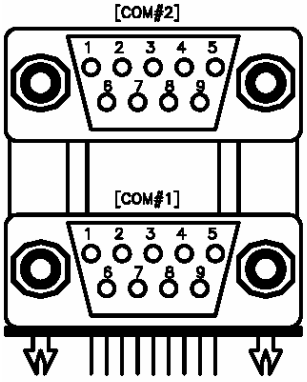

[RJ-45 MODULAR CONNECTOR]

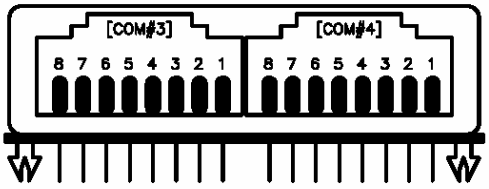

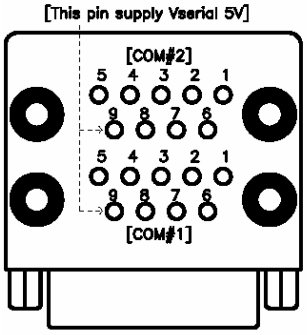

[IO PCB BOTTOM SIED VIEW]

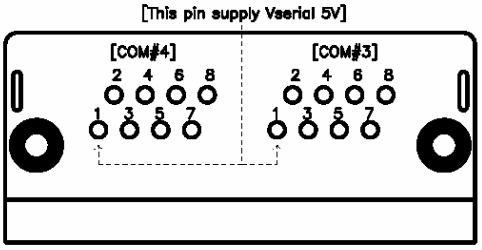

[IO PCB BOTTOM SIED VIEW]

2-5 Interface Specifications

2-5-3 RS-232C Interface Cable

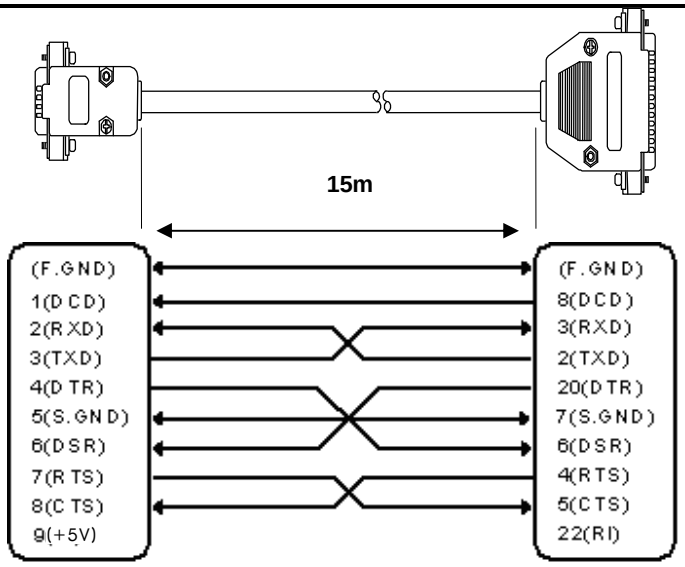

SPS-500 SIDE (DSUB9 FEMALE)	(COM1, COM2 I/F CABLE PIN CONNECTION)	USER SIDE (DSUB25 MALE)

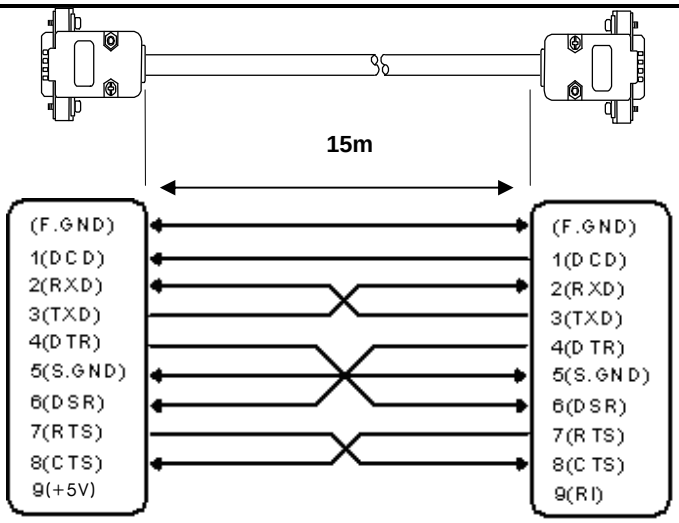

SPS-500 SIDE (DSUB9 FEMALE)	(COM1, COM2 I/F CABLE PIN CONNECTION)	USER SIDE (DSUB9 MALE)

CAUTION :
COM#1~COM#2 supplies “+5V” to DSUB9 “Pin Num 9”.

2-5 Interface Specifications

2-5-3 RS-232C Interface Cable

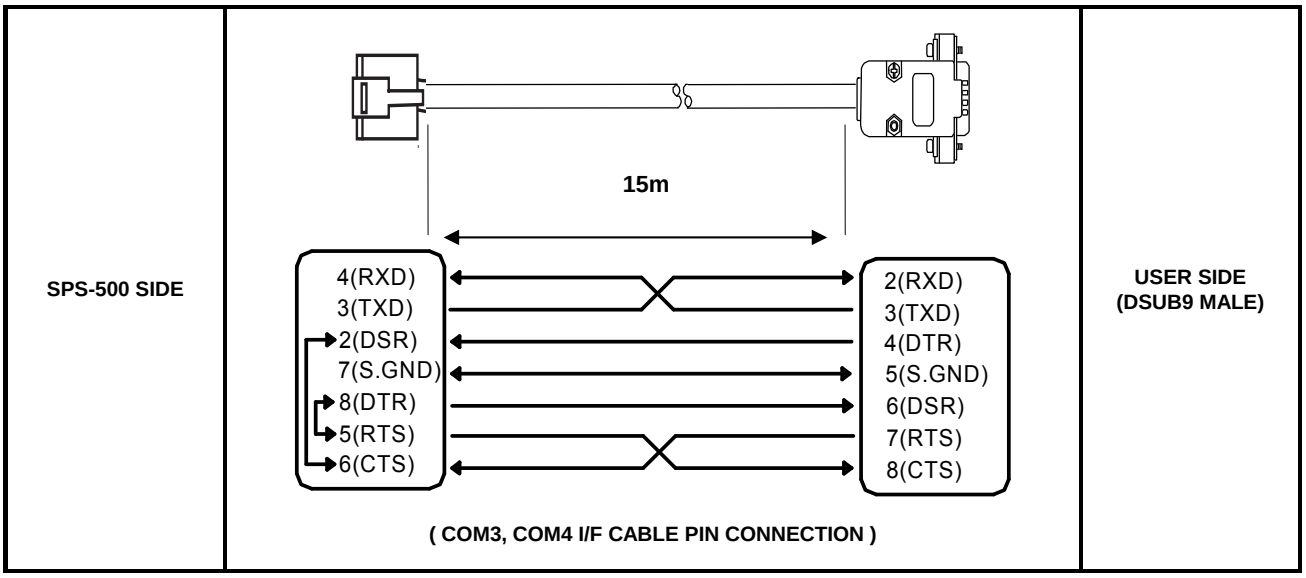

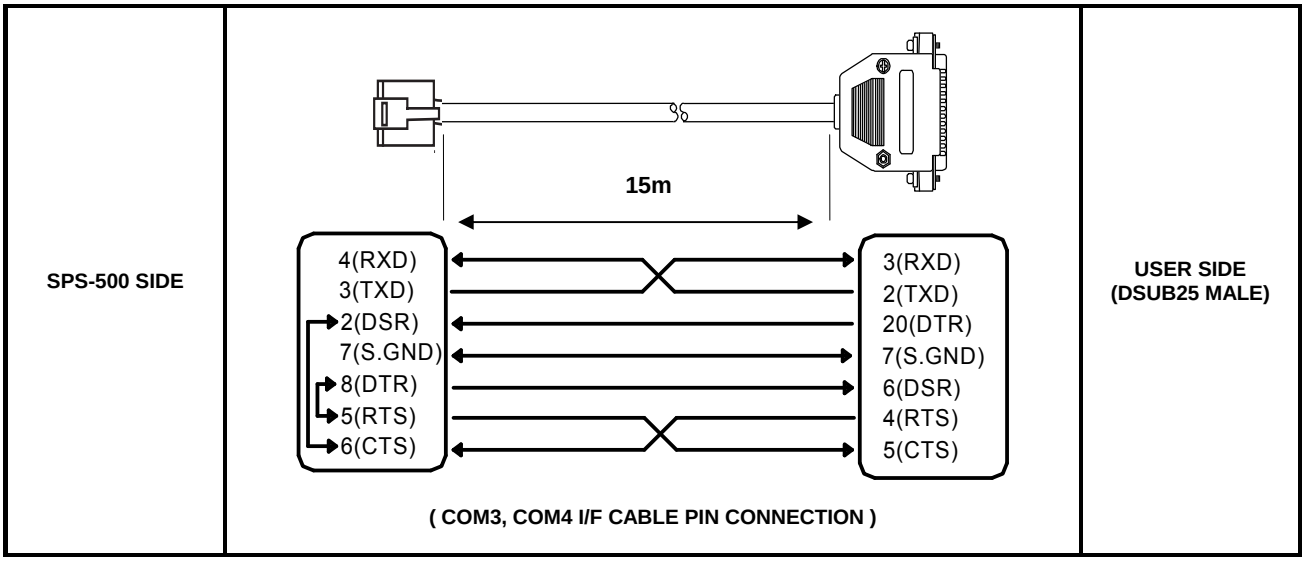

CAUTION :
COM#3~COM#4 supplies “+5V” to RJ45 “Pin Num 1”.

2-5 Interface Specifications

2-5-4 USB Interface Specification

Item	Description	Remark
Transfer Type	● BULK	
Data Signal	● Bi-Direction, Half-Duplex ● Differential Signal Pair (D+ / D-)	
Data Format	● NRZI Format ● Zero Bit Stuffing after 6 Ones	
Transceiver	● Differential Common Mode Range : 0.8 ~ 2.5[V] ● Differential Receive Sensitivity : 200[mV] ● Single End Receive Threshold : 0.8 ~ 2.5[V]	
Speed	● 12Mbps	
Power	● Supply 5V/500mA (For HID)	
Cable & Connector	● Cable :5m/2m ● Connector :A type	
Support Spec	● USB Spec Version 1.1	

2-5-5 USB Signal Description

Pin No	Signal Name	Color	Function
SHELL	Shield	Drain Wire	Frame GND
1	VBUS	Red	Host Power : DC5[V] / 500[mA]
2	D-	White	Differential Data Line
3	D+	Green	Differential Data Line
4	GND	Black	Signal GND

2-5-6 USB Interface Cable

SPS-500 SIDE	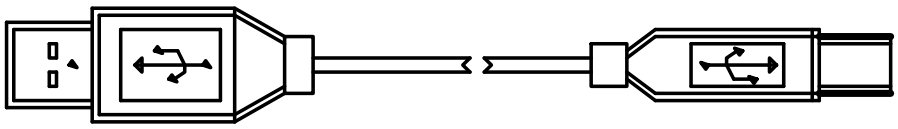 **(USB I/F CABLE)**	**USER SIDE**

2-5 Interface Specifications

2-5-7 LAN (IRC) Signal Description

Pin No	Signal Name	Signal Direction	Function
1	ENET TX+	OUT	Ethernet Transmit Data Line(+)
2	ENET TX-	OUT	Ethernet Transmit Data Line(-)
3	ENET RX+	IN	Ethernet Receive Data Line(+)
4	N.C	-	
5	N.C	-	
6	ENET RX-	IN	Ethernet Receive Data Line(+)
7	N.C	-	
8	N.C	-	

2-5-8 LAN (IRC) Interface Cable

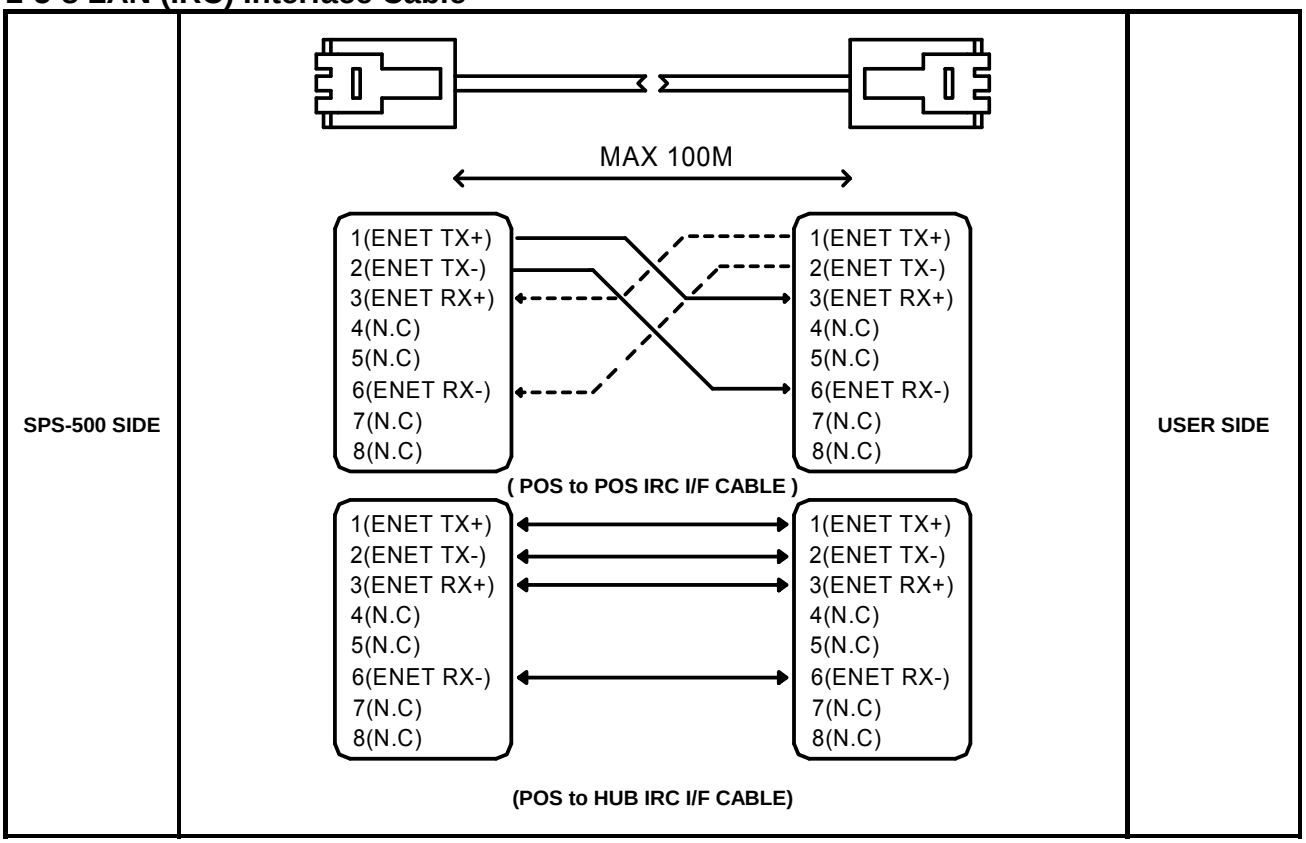

2-5 Interface Specifications

2-5-9 DRAWER Signal Description

Pin No	Signal Name	Direction	Function
1	S.G	-	Signal GND
2	DRAWER#OUT	OUT	Drawer Kick-Out Driver Signal.
3	DRACOMP	IN	Drawer Open / Close Signal
4	+24v	-	Supply DC +24[V]
5	DRAWER#OUT	OUT	Drawer Kick-Out Driver Signal.
6	F.G	-	Frame GND

CAUTION :
Make sure that installed “+24V Cash Drawer”.

Make sure that the Cash Drawer Solenoid Resistance is more than 20[Ohm]

2-5-10 DRAWER Interface Cable

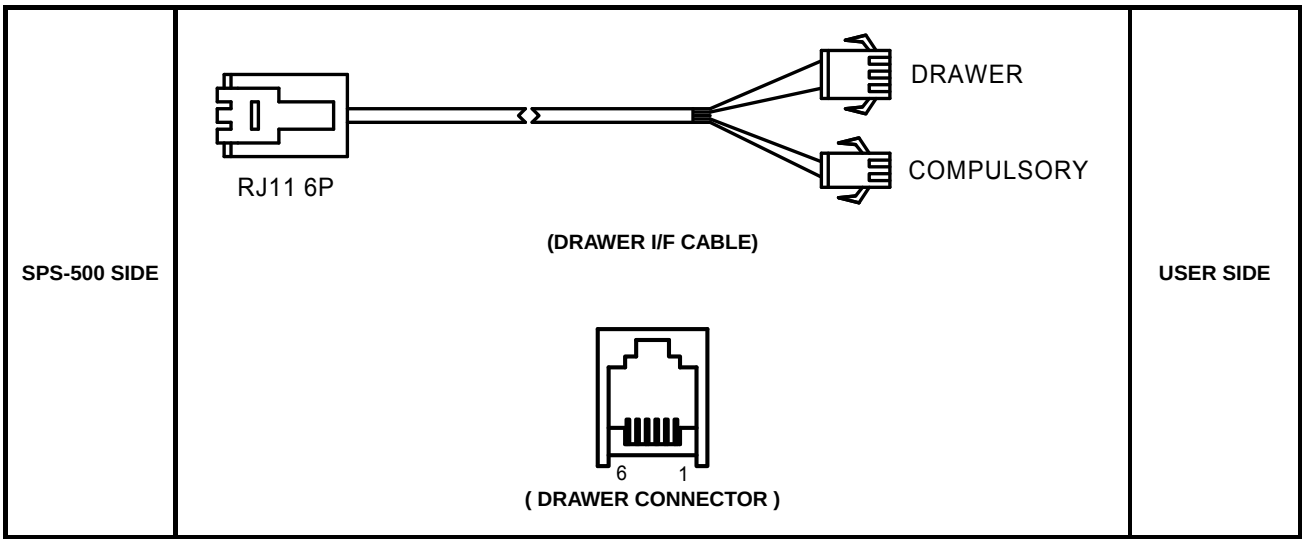

MEMO

MEMO

3 Installation and Operation

3-1 OS and Application Update from PC

3-1-1 Setup the TFTP32

No	Setup Method	Remark
1	•Download or copy the "**tftpd32.300.zip**" file from the FTP server.	
2	•Unpack the file. 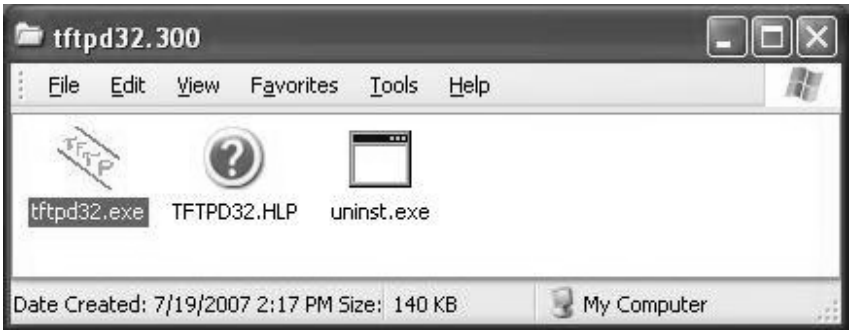 	
3	•Execute the "**tftpd32.exe**" file 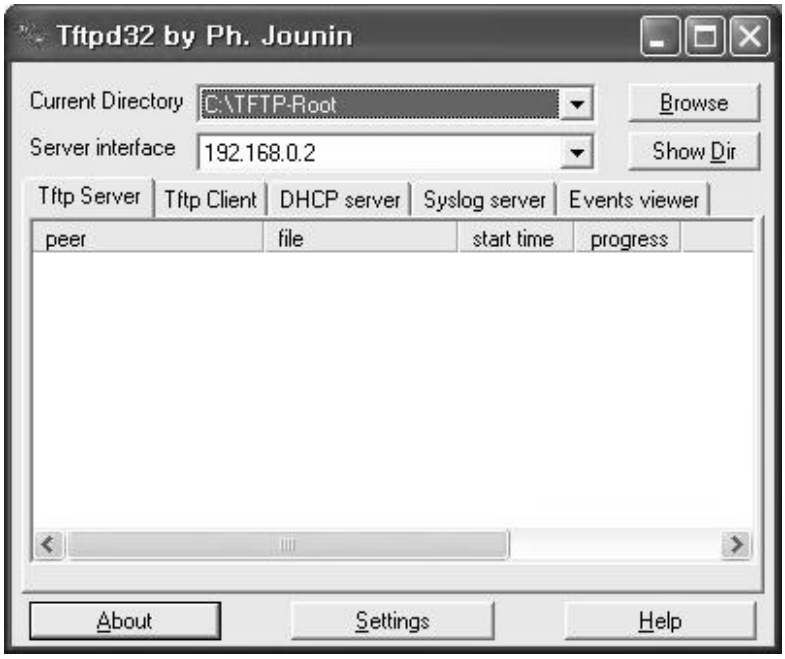 	

3-1 OS and Application Update from PC

3-1-1 Setup the TFTP32

No	Setup Method	Remark
4	•Press "**Settings**" button on the bottom of the window. 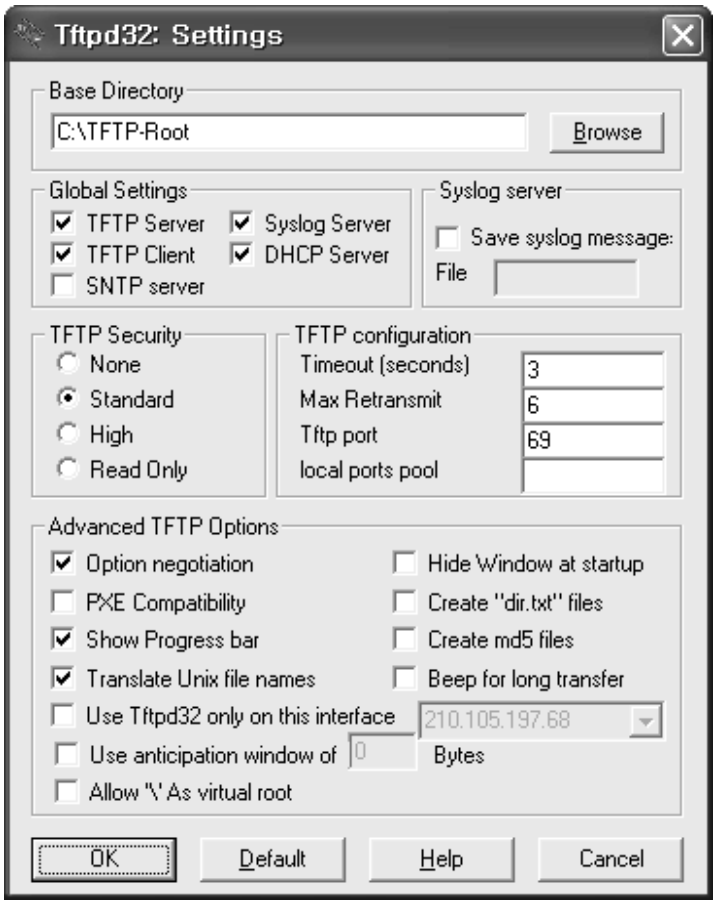 	
5	•Change the Base Directory and press the "**OK**" button	

3-1 OS and Application Update from PC

3-1-2 Program Update Preparation

No	Update Method	Remark
1	•Turn the POS off.	
2	•Execute the tftpd32.exe on your PC.	
3	•Connect the PC and the POS with “Crossed Network Cable” 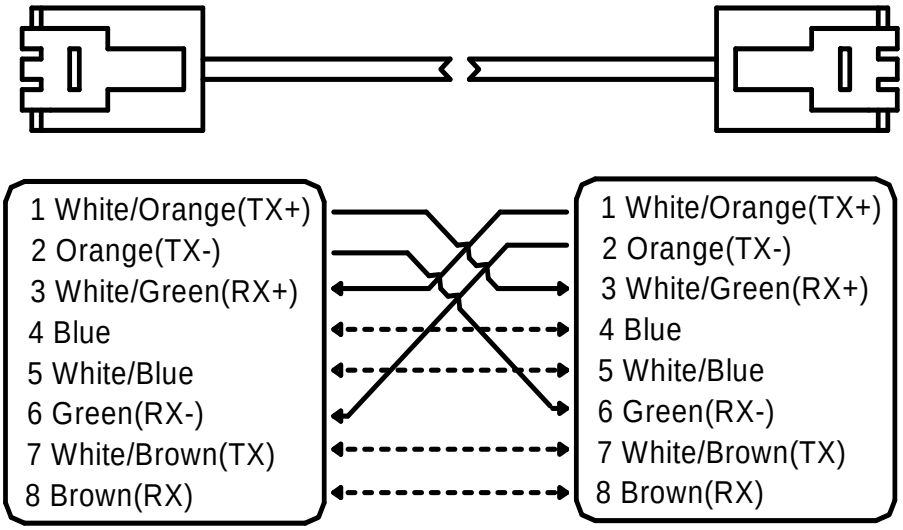 **(Cross Network Cable)**	
4	•Copy the firmware files to TFTP root folder. (C:\TFTP-Root) (**nb_500.bin, zImg500, rdisk500.gz, xlib500.bin, app500.bin**)	
5	•Set up network settings. IP Address (I): 192 . 168 . 0 . 2 Subnet Mask (U): 255 . 255 . 255 . 0 Gateway (D): 192 . 168 . 0 . 1	

3-1 OS and Application Update from PC

3-1-3 OS and Application Update

<table>
<tr><th>No</th><th>Update Method</th><th>Remark</th></tr>
<tr><td>1</td><td>•Execute “3-1-2 PROGRAM UPDATE PREPARATION”</td><td></td></tr>
<tr><td>2</td><td>•Verify DIP Switch (SW2) state. (Refer to Chapter 11)
<table>
<tr><th>SW No</th><th>1</th><th>2</th><th>3</th><th>4</th></tr>
<tr><td>STATE</td><td>OFF</td><td>OFF</td><td>OFF</td><td>OFF</td></tr>
</table></td><td></td></tr>
<tr><td>3</td><td> 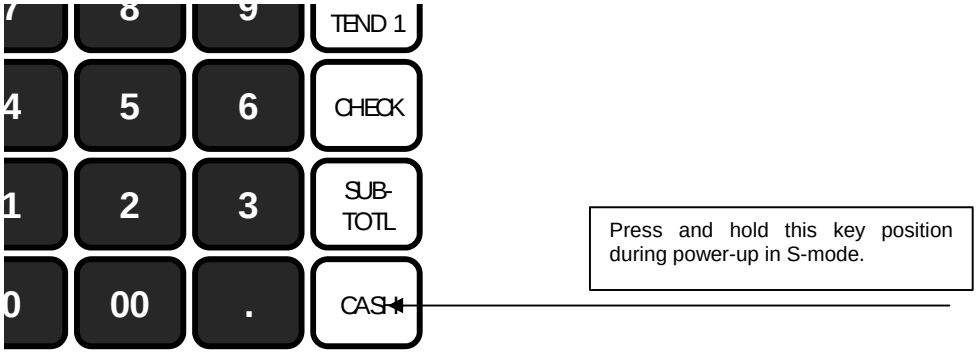
</td><td></td></tr>
<tr><td>4</td><td>• Press the upper left key of the keyboard, then the lower left key, then the upper right key, and finally press the lower right key.
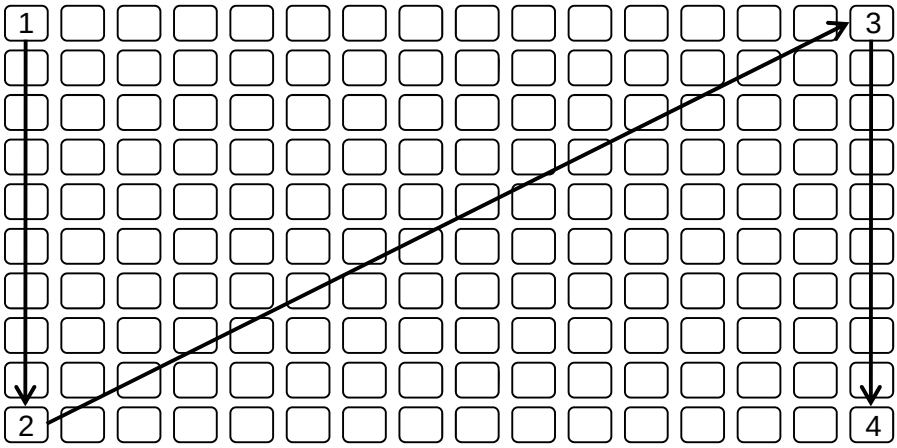
</td><td></td></tr>
</table>

3-1 OS and Application Update from PC

3-1-3 OS and Application Update

No	Update Method	Remark
5	•Enter the system password : **1 2 8 7** 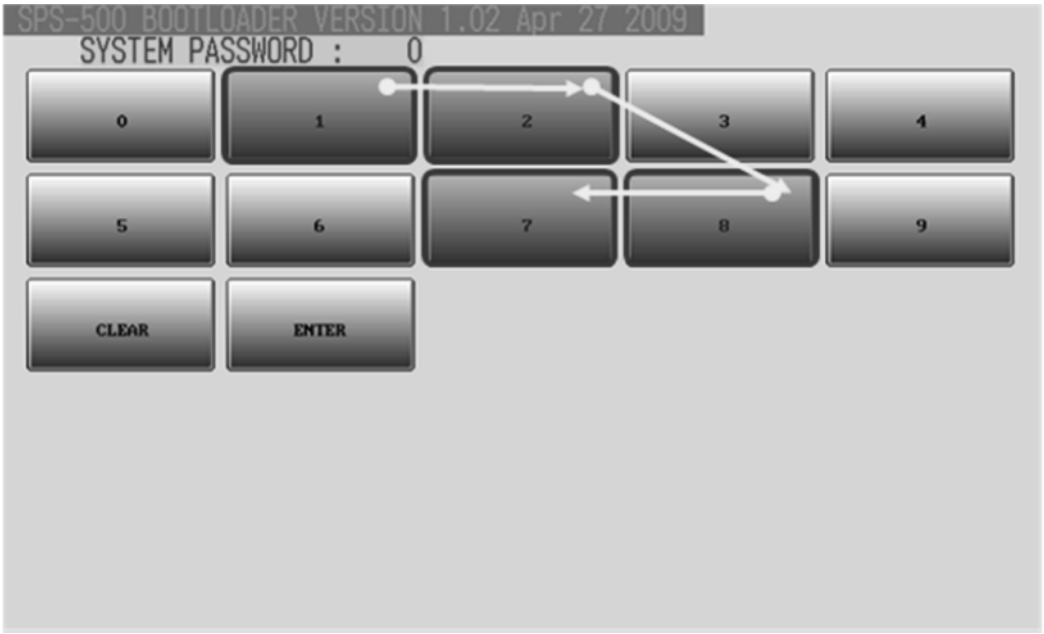 	
6	•Select **"Update"** from the menu on LCD. 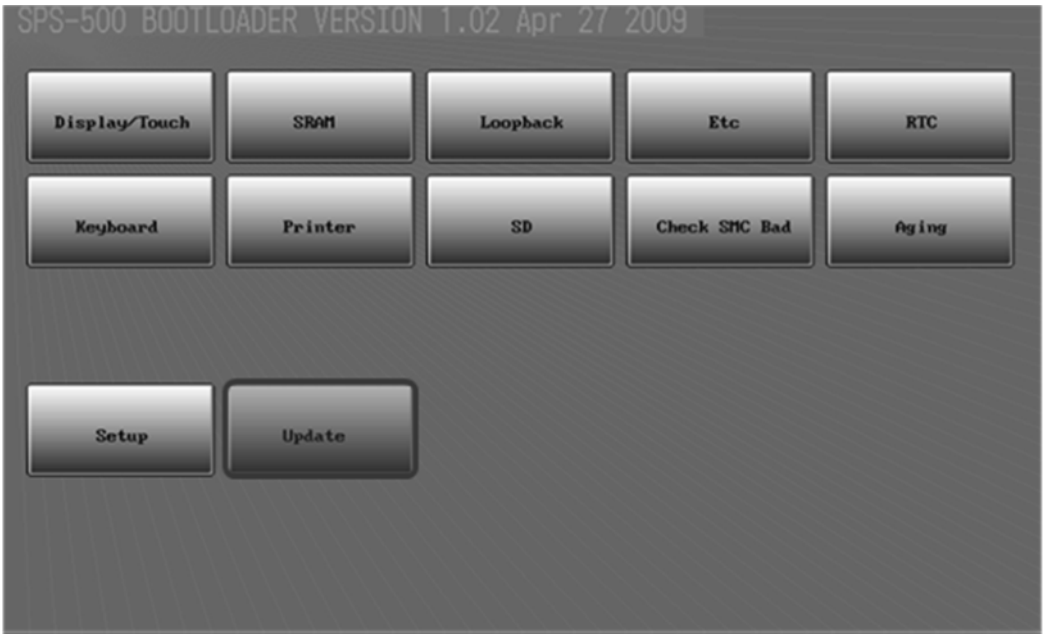 	

3-1 OS and Application Update from PC

3-1-3 OS and Application Update

No	Update Method	Remark
7	•Select **"Copy All"** from the menu on LCD. 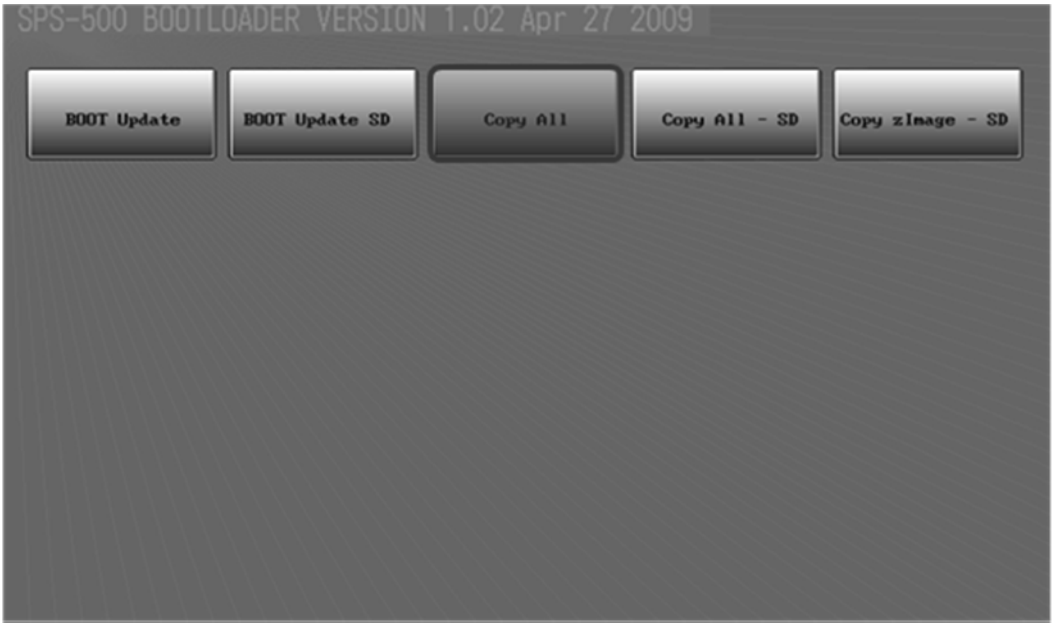 	
8	•Select **"YES"** from the menu on LCD. 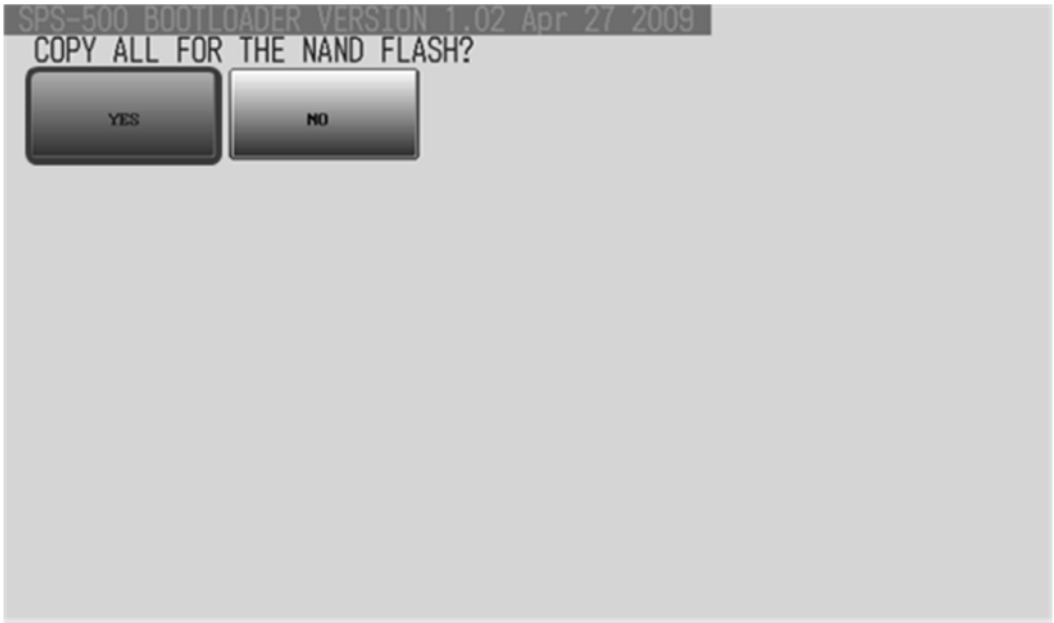 	

3-2 OS and Application Update from SD card.

3-2-1 Format the SD card with FAT-32 file system

No	Format Method	Remark
1	• Format the SD card with FAT-32 file system. 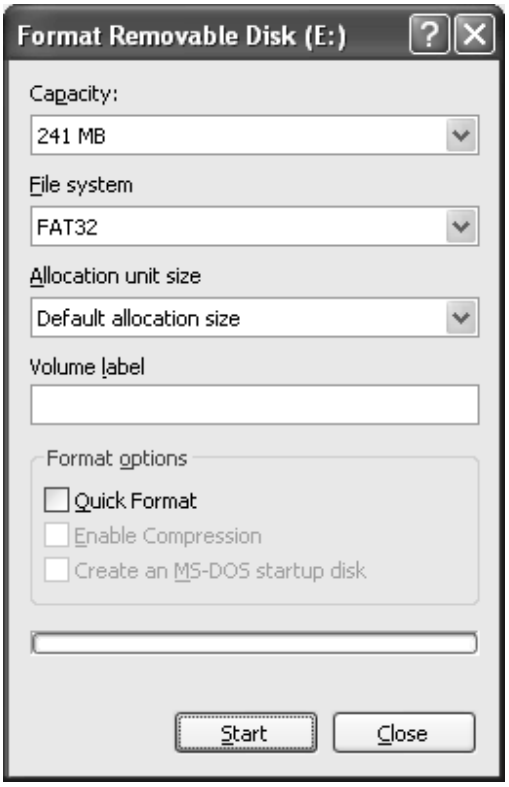 	

3-2 OS and Application Update from SD card.

3-2-2 Program Update Preparation

No	Update Method	Remark
1	•Create a directory named "**Update\sps500**" on root of the SD card. 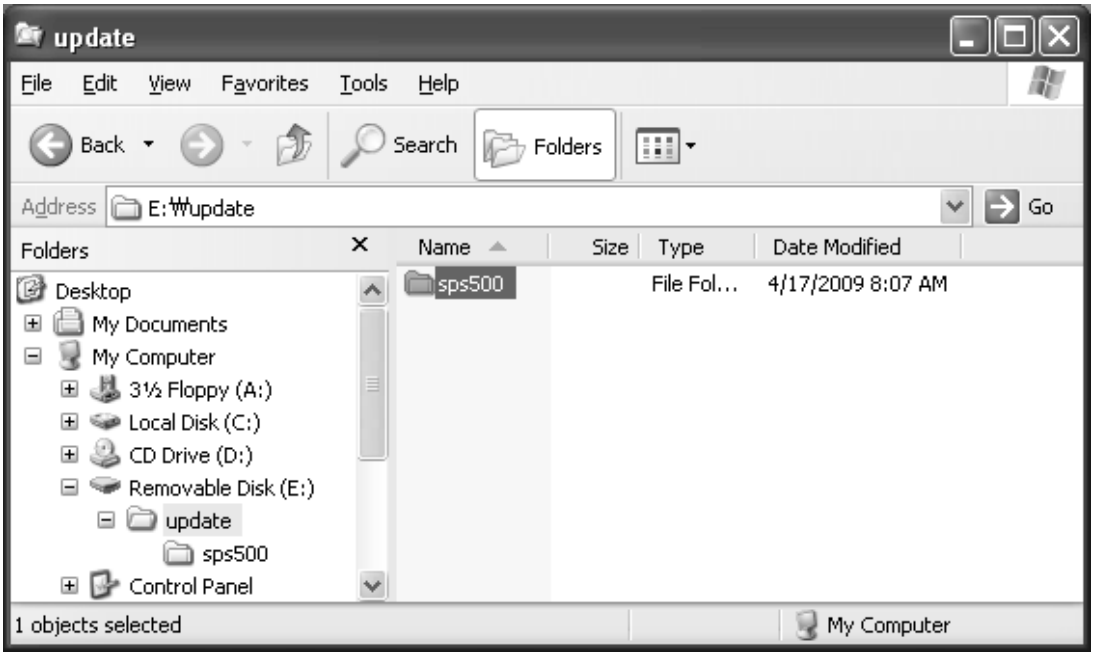 	
2	•Copy following files to "Update" directory of the SD card. (**nb_500.bin, zImg500, rdisk500.gz, xlib500.bin, app500.bin**) 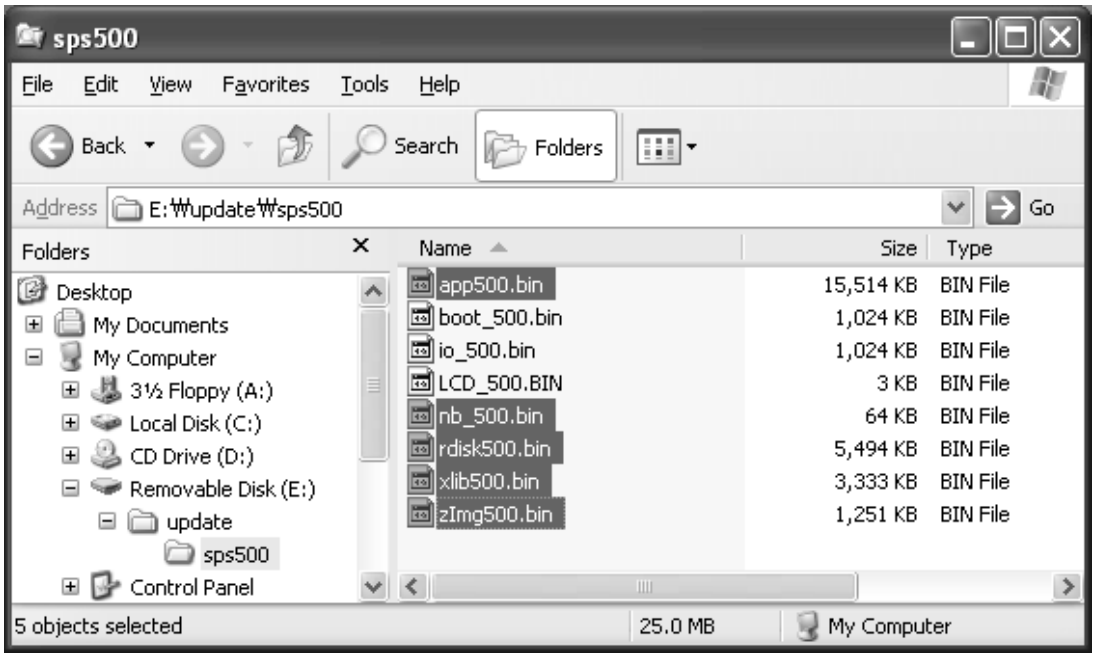 	

3-2 OS and Application Update from SD card.

3-2-3 OS and Application Update

<table>
<tr><th>No</th><th>Update Method</th><th>Remark</th></tr>
<tr><td>1</td><td>•Execute “3-2-2 PROGRAM UPDATE PREPARATION”</td><td></td></tr>
<tr><td>2</td><td>•Verify DIP Switch (SW2) state. (Refer to Chapter 11)
<table>
<tr><th>SW No</th><th>1</th><th>2</th><th>3</th><th>4</th></tr>
<tr><td>STATE</td><td>OFF</td><td>OFF</td><td>OFF</td><td>OFF</td></tr>
</table></td><td></td></tr>
<tr><td>3</td><td> 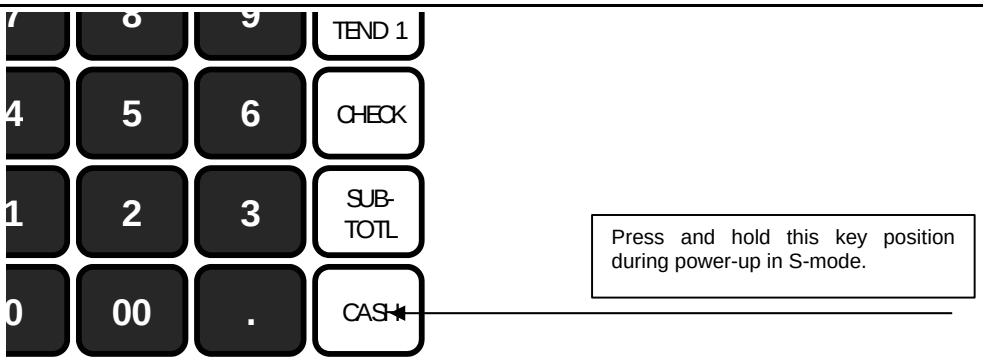
</td><td></td></tr>
<tr><td>4</td><td>• Press the upper left key of the keyboard, then the lower left key, then the upper right key, and finally press the lower right key.
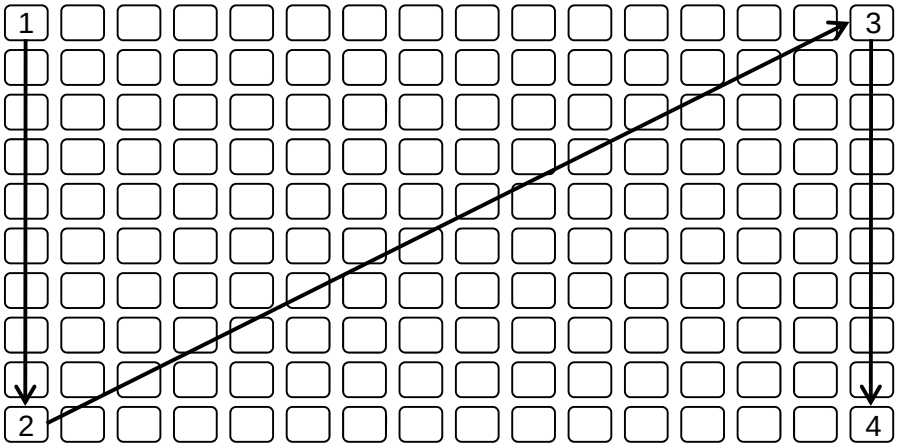
</td><td></td></tr>
</table>

3-2 OS and Application Update from SD card.

3-2-3 OS and Application Update

5	•Enter the system password : **1 2 8 7** 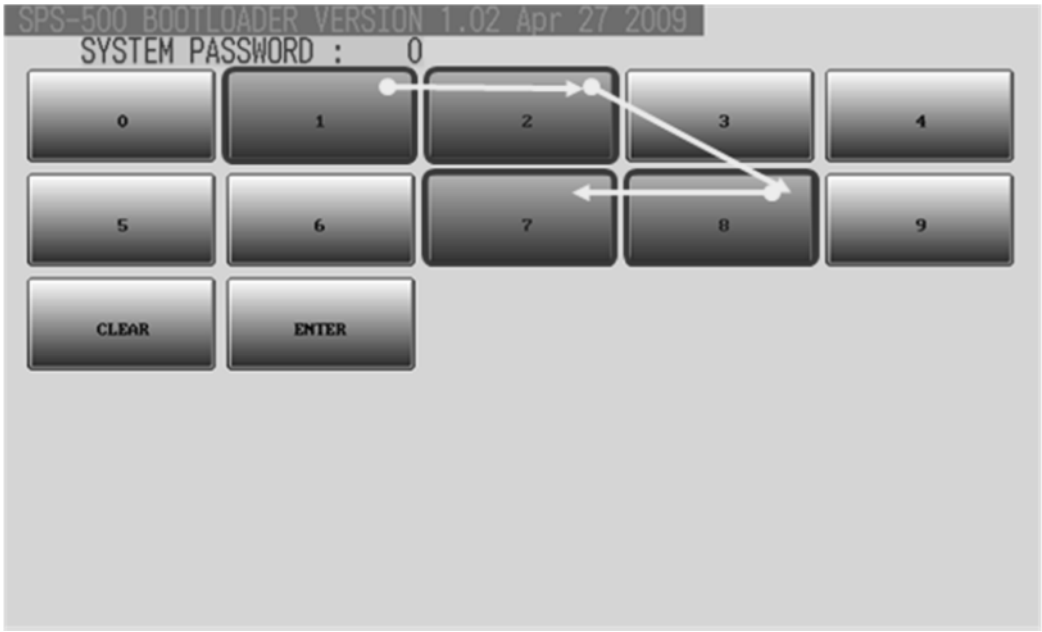 	
6	•Select **"Update"** from the menu on LCD. 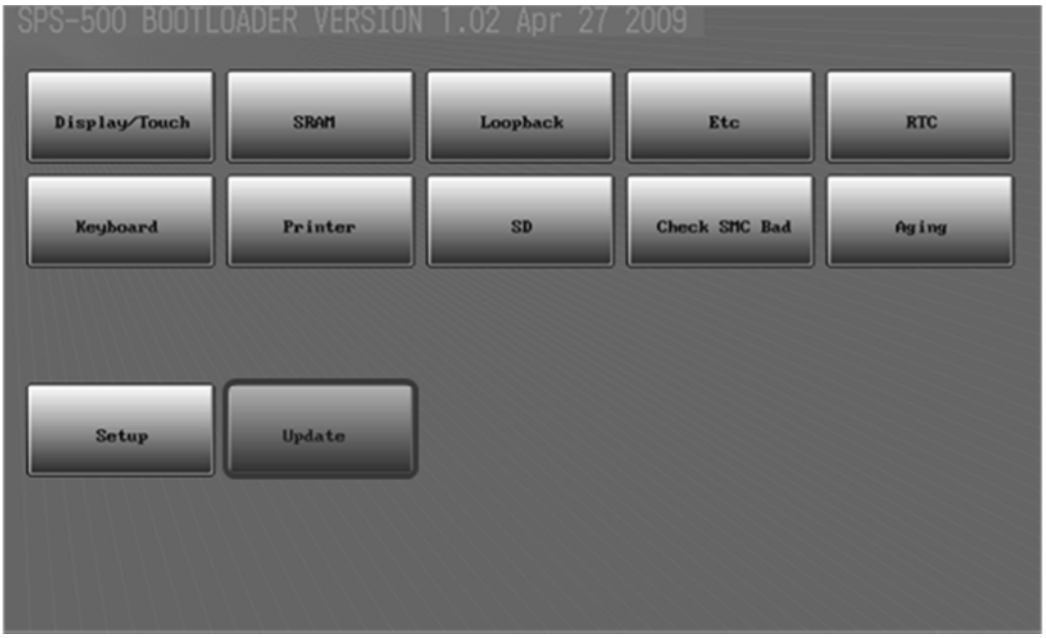 	

3-2 OS and Application Update from SD card.

3-2-3 OS and Application Update

7	•Select **"Copy All - SD"** from the menu on LCD. 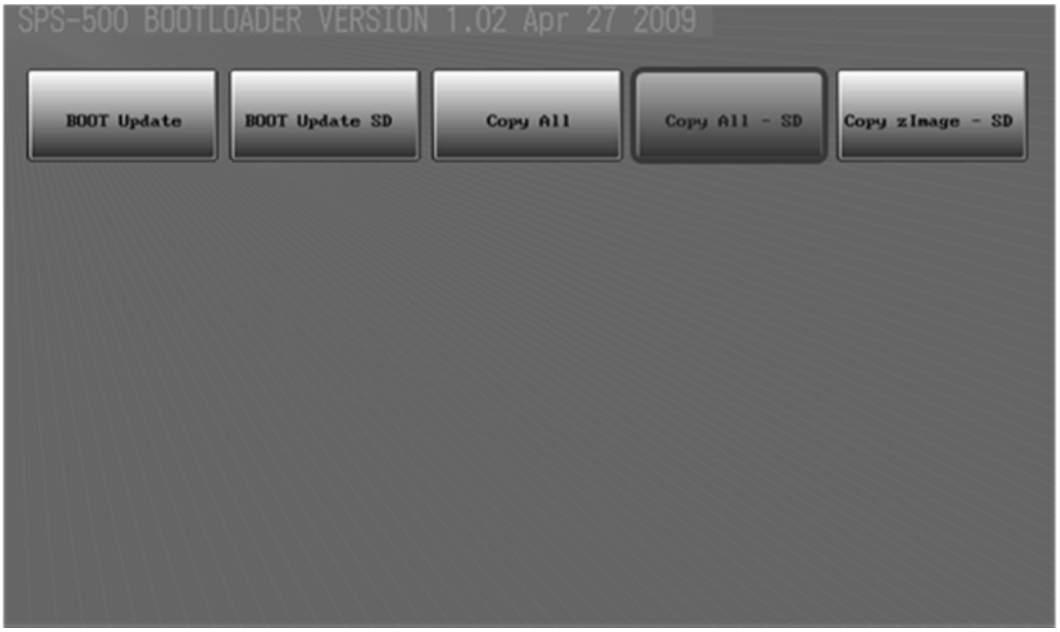 	
8	•Select **"YES"** from the menu on LCD.  	

3-3 Boot Area Update (Nor Flash A29l800UV) From PC

<table>
<tr><th>No</th><th>Update Method</th><th>Remark</th></tr>
<tr><td>1</td><td>•Execute “3-1-2 PROGRAM UPDATE PREPARATION”</td><td></td></tr>
<tr><td>2</td><td>•Verify DIP Switch (SW2) state. (Refer to Chapter 11)
<table>
<tr><th>SW No</th><th>1</th><th>2</th><th>3</th><th>4</th></tr>
<tr><td>STATE</td><td>OFF</td><td>OFF</td><td>OFF</td><td>OFF</td></tr>
</table></td><td></td></tr>
<tr><td>3</td><td> 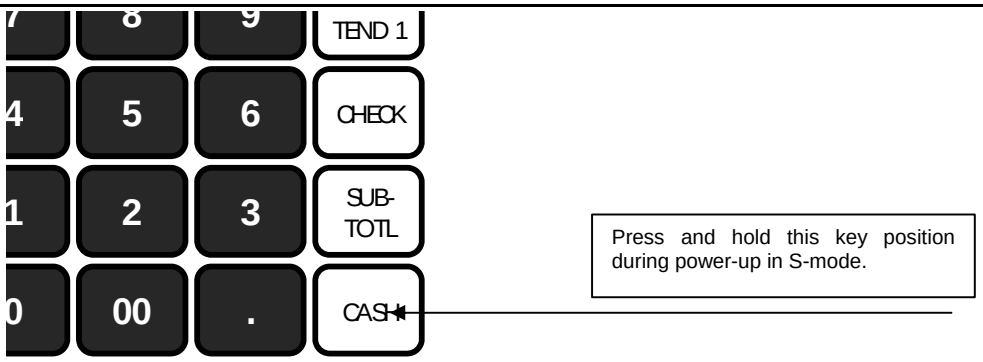
</td><td></td></tr>
<tr><td>4</td><td>• Press the upper left key of the keyboard, then the lower left key, then the upper right key, and finally press the lower right key.
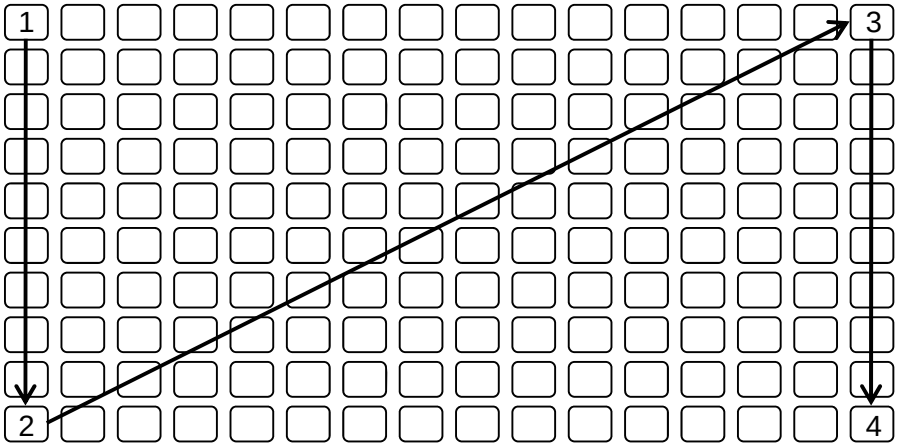
</td><td></td></tr>
</table>

3-3 Boot Area Update (Nor Flash A29l800UV) From PC

No	Update Method	Remark
5	•Enter the system password : **1 2 8 7** 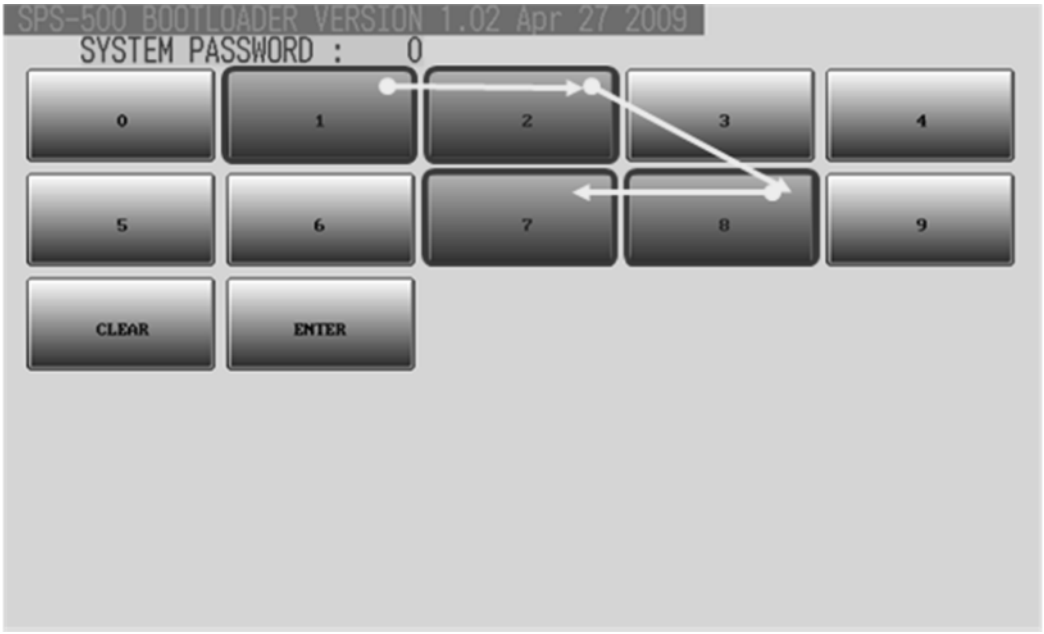 	
6	•Select **"Update"** from the menu on LCD. 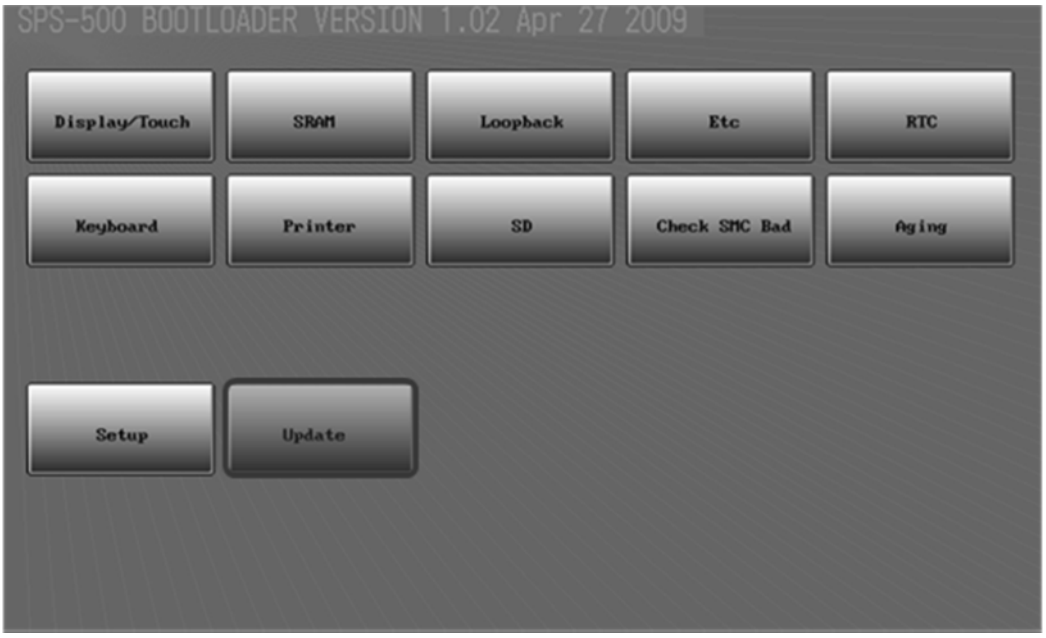 	

3-3 Boot Area Update (Nor Flash A29l800UV) From PC

No	Update Method	Remark
7	•Select **"BOOT Update"** from the menu on LCD. 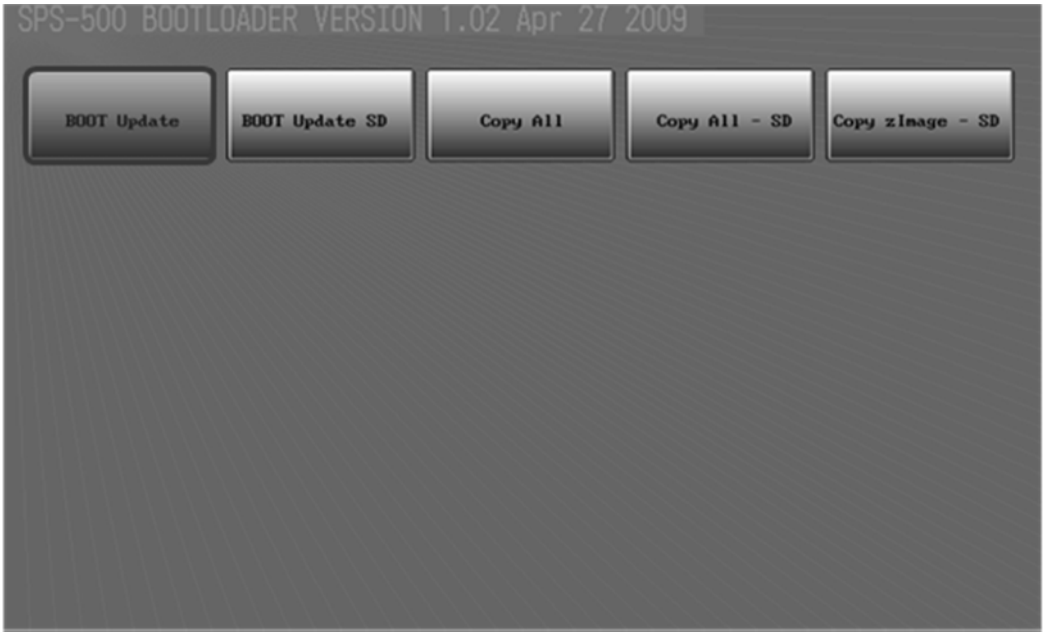 	
8	•Select **"YES"** from the menu on LCD. 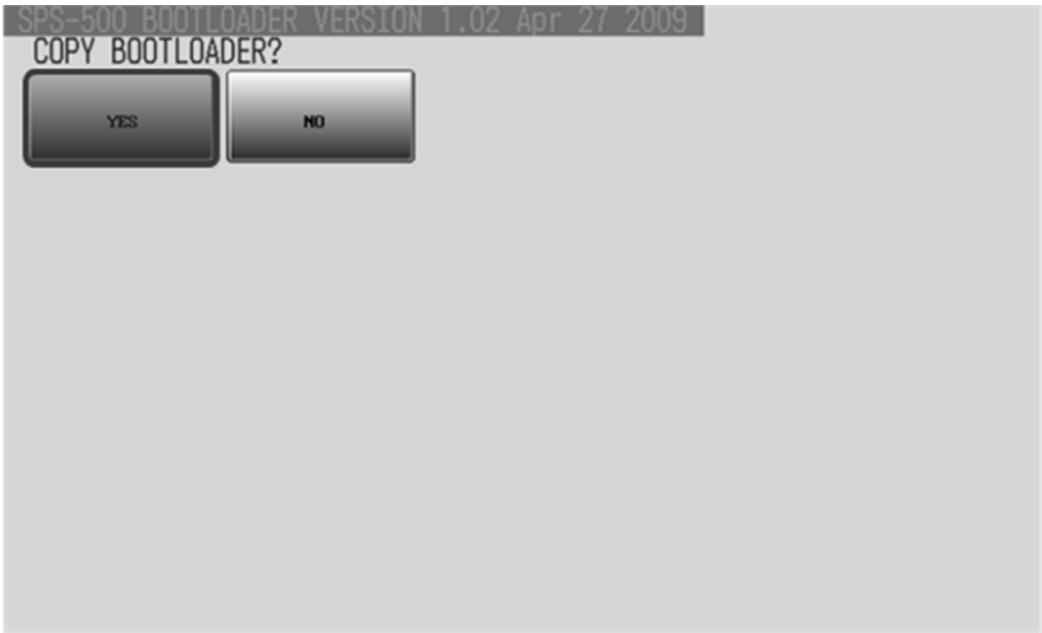 	

3-4 Boot Area Update (Nor Flash A29l800UV) From SD card

<table>
<tr><th>No</th><th>Update Method</th><th>Remark</th></tr>
<tr><td>1</td><td>•Execute “3-2-2 PROGRAM UPDATE PREPARATION”
** Copy “Boot_500.bin” file to “SD:\Update\sps500” folder</td><td></td></tr>
<tr><td>2</td><td>•Verify DIP Switch (SW2) state. (Refer to Chapter 11)
<table><tr><th>SW No</th><th>1</th><th>2</th><th>3</th><th>4</th></tr><tr><td>STATE</td><td>OFF</td><td>OFF</td><td>OFF</td><td>OFF</td></tr></table></td><td></td></tr>
<tr><td>3</td><td> 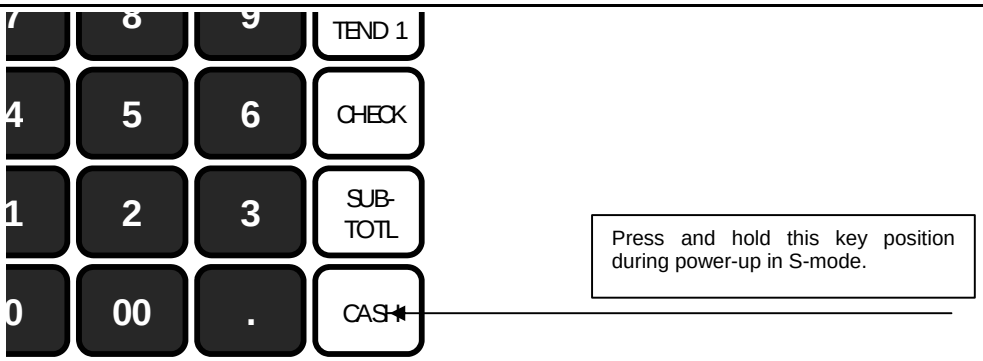
</td><td></td></tr>
<tr><td>4</td><td>• Press the upper left key of the keyboard, then the lower left key, then the upper right key, and finally press the lower right key.
 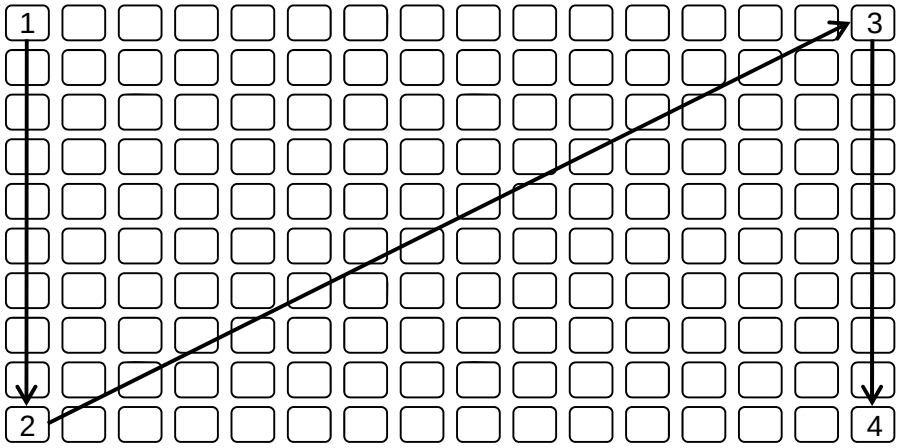
</td><td></td></tr>
</table>

3-4 Boot Area Update (Nor Flash A29l800UV) From SD card

No	Update Method	Remark
5	•Enter the system password : **1 2 8 7** 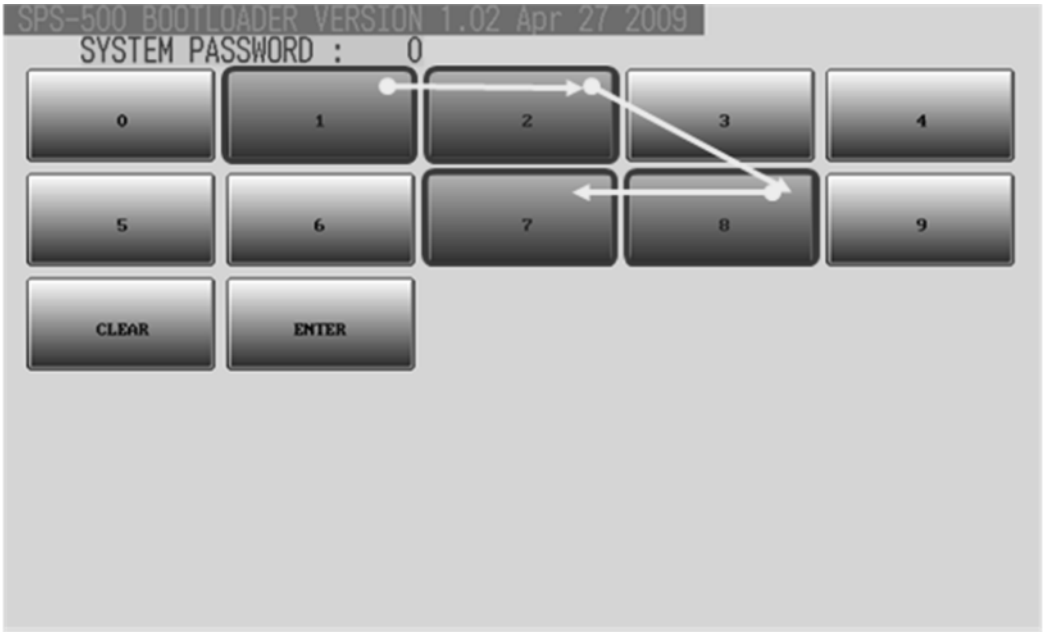 	
6	•Select **"Update"** from the menu on LCD. 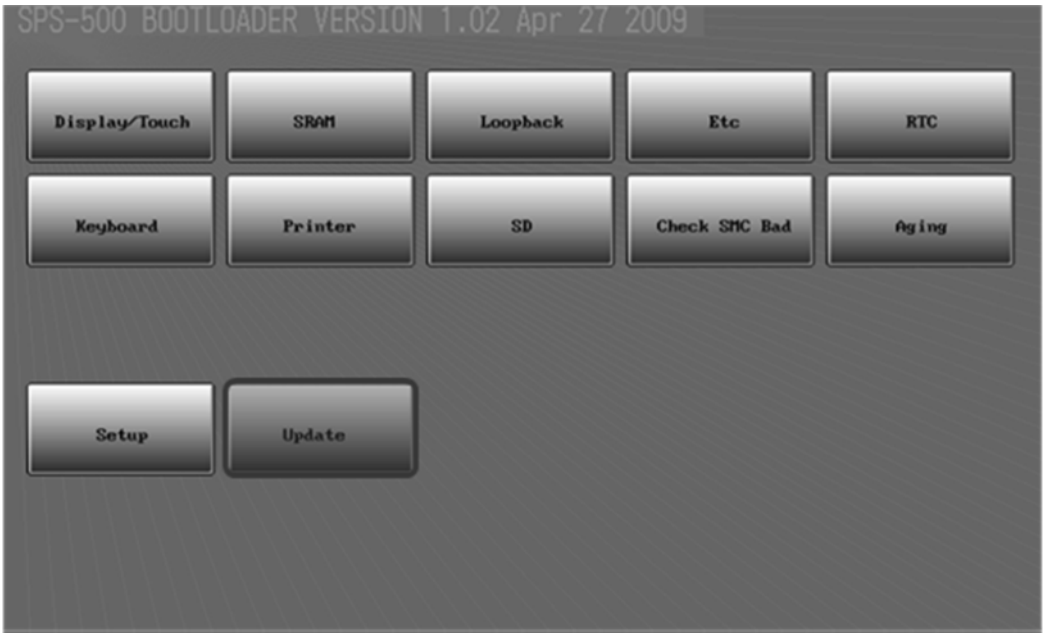 	

3-4 Boot Area Update (Nor Flash A29l800UV) From SD card

No	Update Method	Remark
7	•Select **"Boot Update SD"** from the menu on LCD. 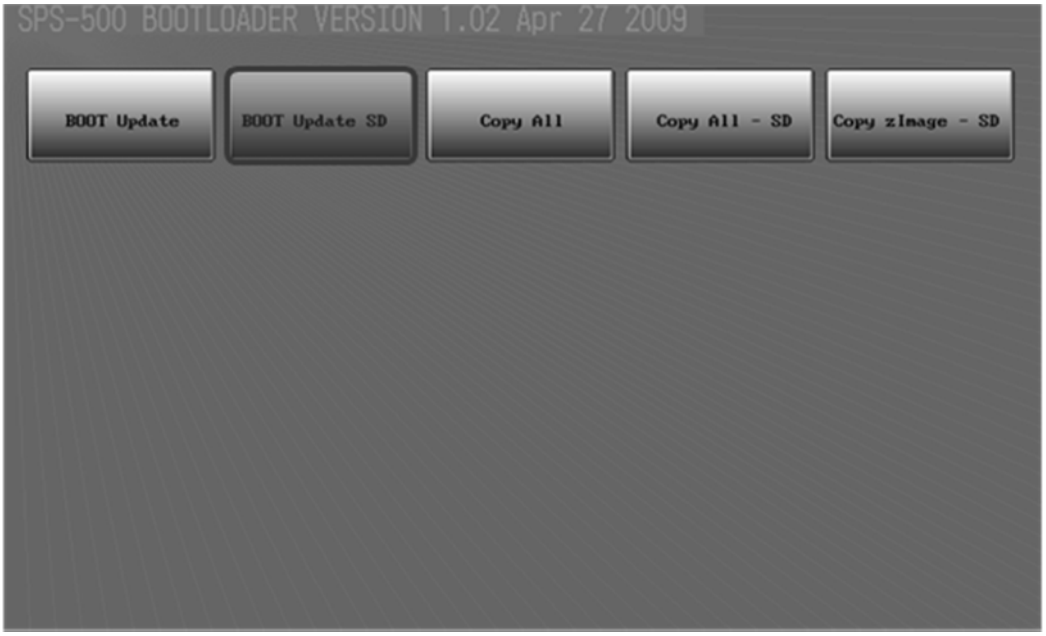 	
8	•Select **"YES"** from the menu on LCD. 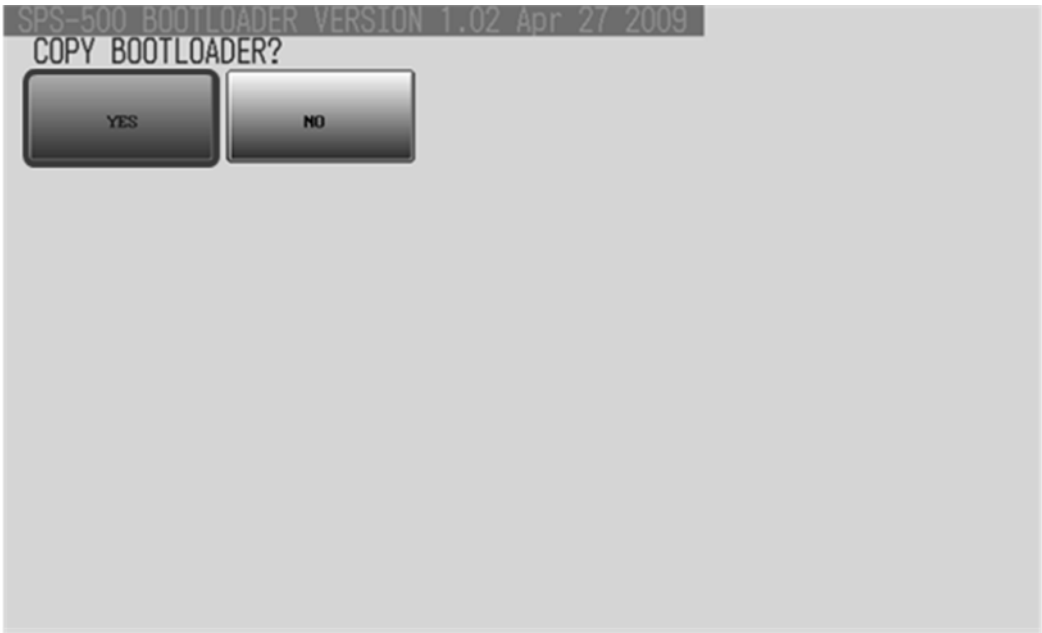 	

3-5 IO Board CPU Update From PC

<table>
<tr><th>No</th><th>Update Method</th><th>Remark</th></tr>
<tr><td>1</td><td>•Execute “3-1-2 PROGRAM UPDATE PREPARATION”</td><td></td></tr>
<tr><td>2</td><td>•Verify DIP Switch (SW2) state. (Refer to Chapter 11)
<table>
<tr><th>SW No</th><th>1</th><th>2</th><th>3</th><th>4</th></tr>
<tr><td>STATE</td><td>OFF</td><td>OFF</td><td>OFF</td><td>OFF</td></tr>
</table></td><td></td></tr>
<tr><td>3</td><td> 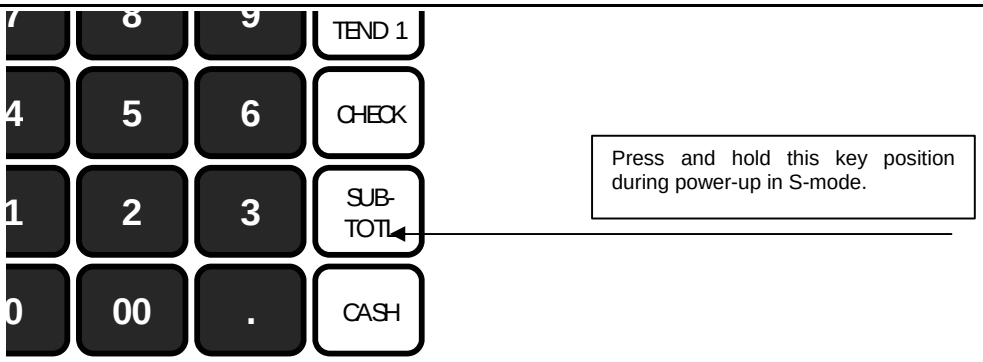
</td><td></td></tr>
<tr><td>4</td><td>• Press the upper left key of the keyboard, then the lower left key, then the upper right key, and finally press the lower right key.
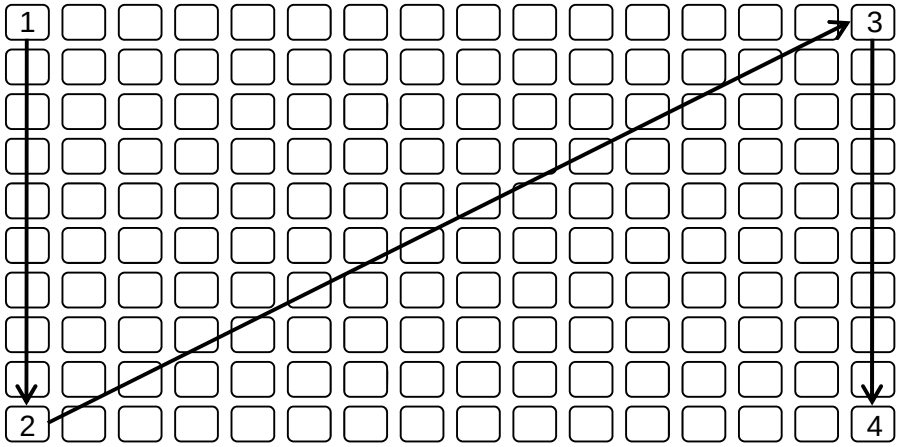
</td><td></td></tr>
</table>

3-5 IO Board CPU Update From PC

No	Update Method	Remark
5	•Select one of three buttons marked in red. 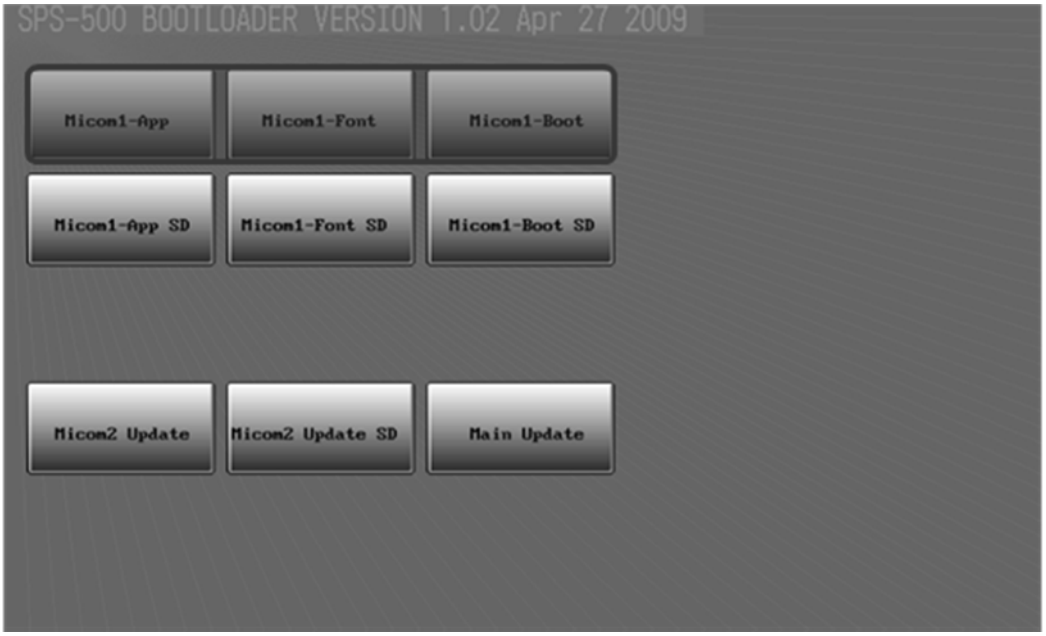 	
6	•Select **"YES"** from the menu on LCD.  	

3-6 IO Board CPU Update From SD card

<table>
<tr><th>No</th><th>Update Method</th><th>Remark</th></tr>
<tr><td>1</td><td>•Execute “3-2-2 PROGRAM UPDATE PREPARATION”
** Copy “io_500.bin” file to “SD:\Update\sps500” folder</td><td></td></tr>
<tr><td>2</td><td>•Verify DIP Switch (SW2) state. (Refer to Chapter 11)
<table>
<tr><th>SW No</th><td>1</td><td>2</td><td>3</td><td>4</td></tr>
<tr><th>STATE</th><td>OFF</td><td>OFF</td><td>OFF</td><td>OFF</td></tr>
</table></td><td></td></tr>
<tr><td>3</td><td> 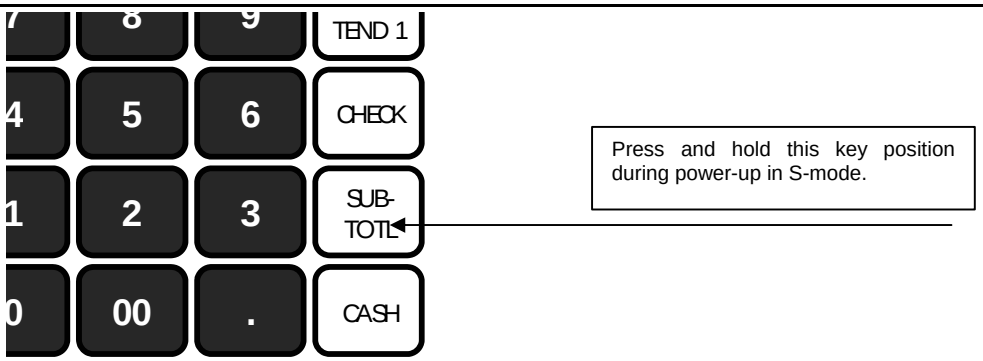
</td><td></td></tr>
<tr><td>4</td><td>• Press the upper left key of the keyboard, then the lower left key, then the upper right key, and finally press the lower right key.
 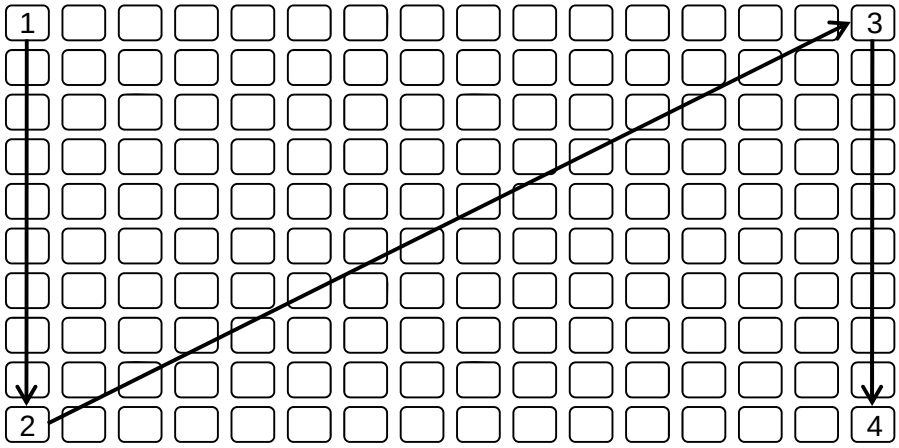
</td><td></td></tr>
</table>

3-6 IO Board CPU Update From SD card

No	Update Method	Remark
5	• Select one of three button marked in red. 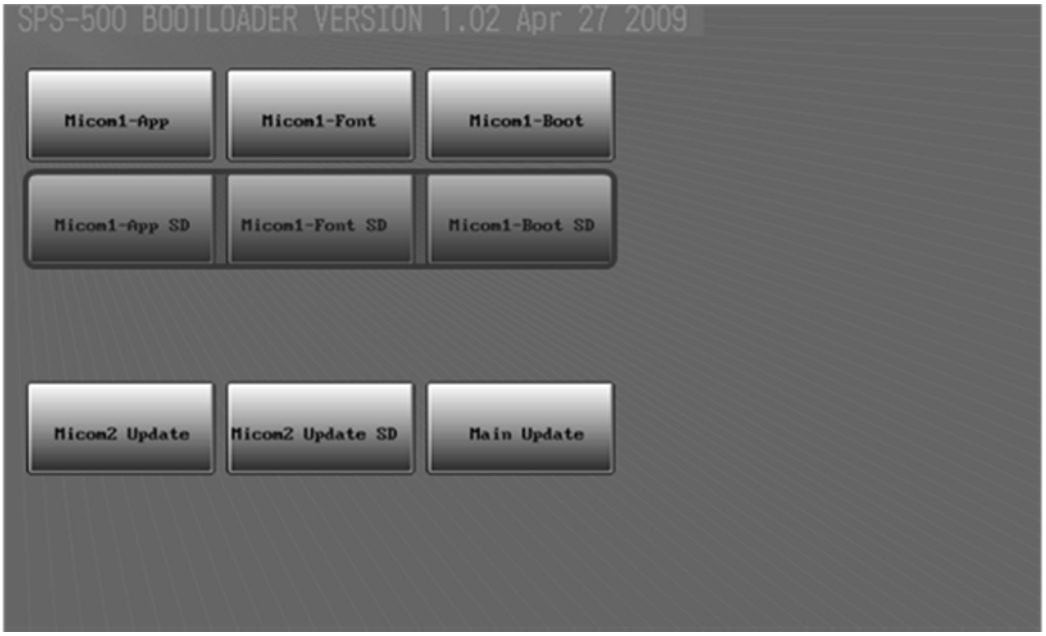 	
6	•Select **"YES"** from the menu on LCD.  	

3-7 LCD Board CPU Update From PC

<table>
<tr><th>No</th><th>Update Method</th><th>Remark</th></tr>
<tr><td>1</td><td>•Execute “3-1-2 PROGRAM UPDATE PREPARATION”</td><td></td></tr>
<tr><td>2</td><td>•Verify DIP Switch (SW2) state. (Refer to Chapter 11)
<table>
<tr><th>SW No</th><th>1</th><th>2</th><th>3</th><th>4</th></tr>
<tr><td>STATE</td><td>OFF</td><td>OFF</td><td>OFF</td><td>OFF</td></tr>
</table></td><td></td></tr>
<tr><td>3</td><td> 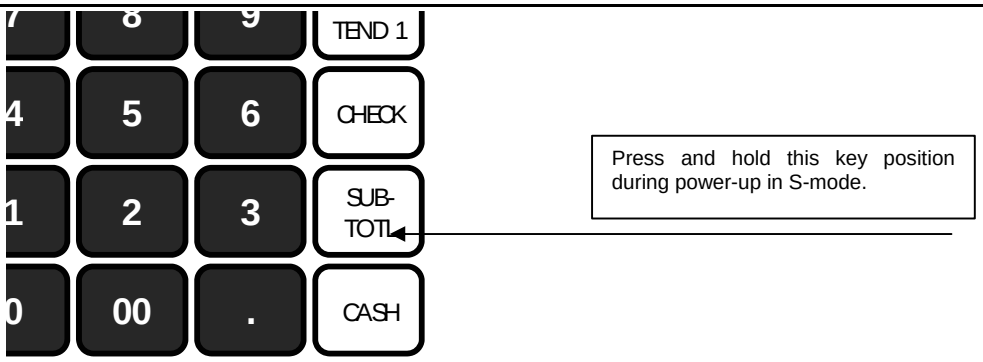
</td><td></td></tr>
<tr><td>4</td><td>• Press the upper left key of the keyboard, then the lower left key, then the upper right key, and finally press the lower right key.
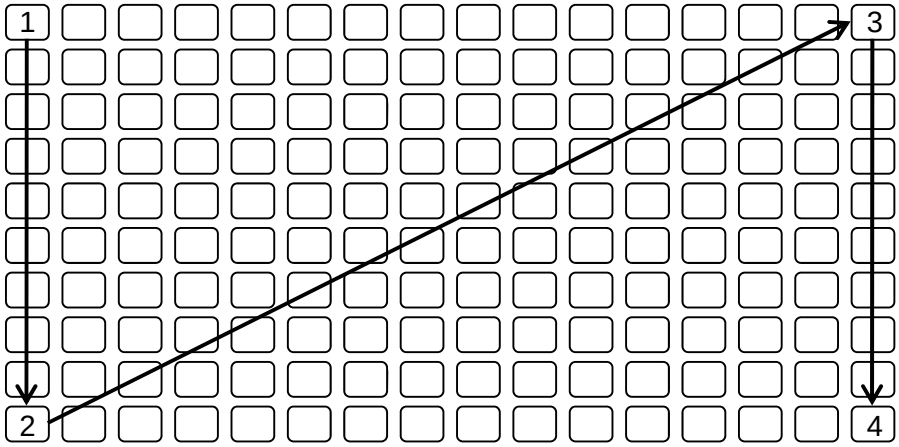
</td><td></td></tr>
</table>

3-7 LCD Board CPU Update From PC

No	Update Method	Remark
5	•Select one of three button marked in red. 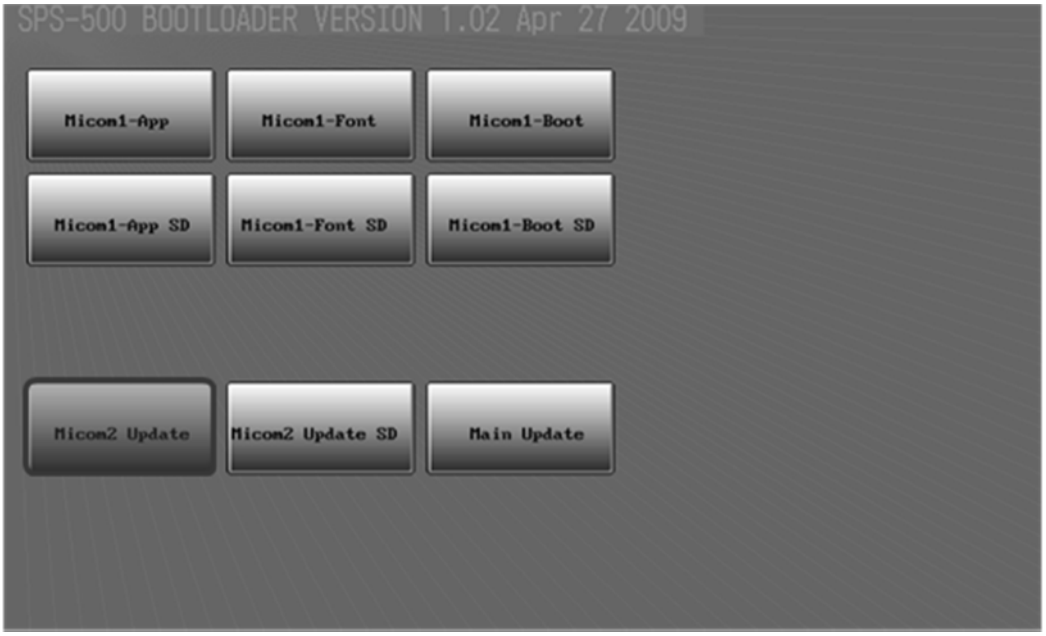 	
6	•Select **"YES"** from the menu on LCD.  	

3-8 LCD Board CPU Update From SD card

<table>
<tr><th>No</th><th>Update Method</th><th>Remark</th></tr>
<tr><td>1</td><td>•Execute “3-2-2 PROGRAM UPDATE PREPARATION”
** Copy “Lcd_500.bin” file to “SD:\Update\sps500” folder</td><td></td></tr>
<tr><td>2</td><td>•Verify DIP Switch (SW2) state. (Refer to Chapter 11)
<table>
<tr><th>SW No</th><th>1</th><th>2</th><th>3</th><th>4</th></tr>
<tr><td>STATE</td><td>OFF</td><td>OFF</td><td>OFF</td><td>OFF</td></tr>
</table></td><td></td></tr>
<tr><td>3</td><td> 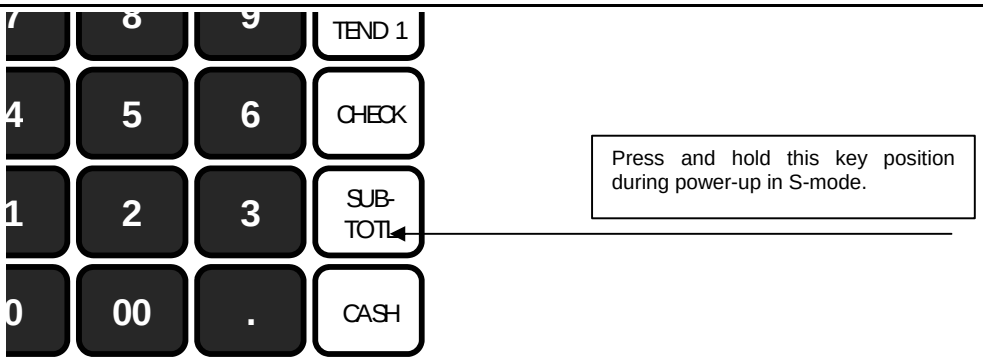
</td><td></td></tr>
<tr><td>4</td><td>• Press the upper left key of the keyboard, then the lower left key, then the upper right key, and finally press the lower right key.
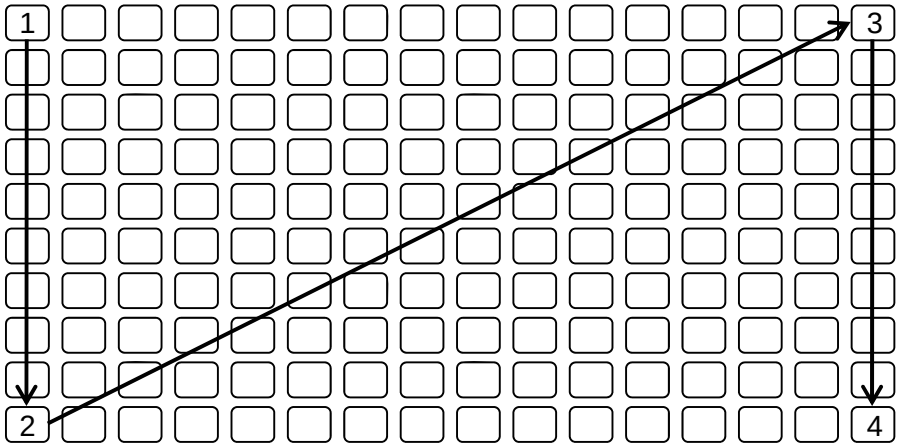
</td><td></td></tr>
</table>

3-8 LCD Board CPU Update From SD card

No	Update Method	Remark
5	• Select one of three button marked in red. 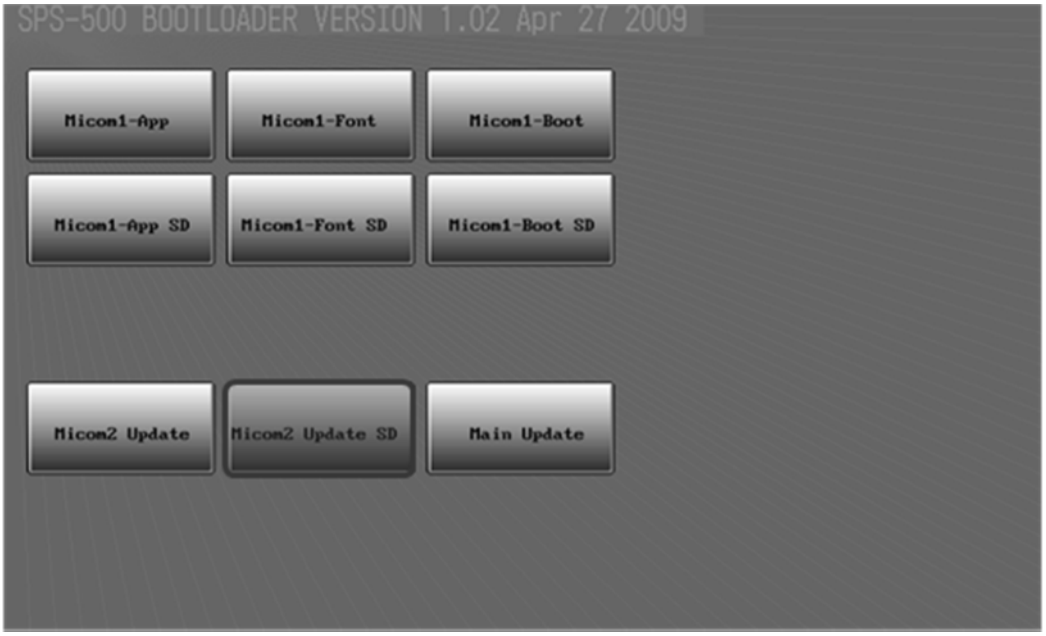 	
6	•Select **"YES"** from the menu on LCD.  	

3-9 Boot Area Update-In Case Of Boot Area Corrupt (Nor Flash A29l800UV)

<table>
<tr><th>No</th><th>Update Method</th><th>Remark</th></tr>
<tr><td>1</td><td>•Execute “3-1-2 PROGRAM UPDATE PREPARATION”</td><td></td></tr>
<tr><td>2</td><td>•Set DIP Switch (SW2) state as follows. (Refer to Chapter 11)
<table>
<tr><th>SW No</th><th>1</th><th>2</th><th>3</th><th>4</th></tr>
<tr><td>STATE</td><td>ON</td><td>ON</td><td>OFF</td><td>OFF</td></tr>
</table></td><td></td></tr>
<tr><td>3</td><td>•Turn the Power Switch to “ON Position”.</td><td></td></tr>
<tr><td>4</td><td>•After finishing update procedure, the front LEDs blink</td><td></td></tr>
<tr><td>5</td><td>•Return DIP Switch (SW2) state as follows. (Refer to Chapter 11)
<table>
<tr><th>SW No</th><th>1</th><th>2</th><th>3</th><th>4</th></tr>
<tr><td>STATE</td><td>OFF</td><td>OFF</td><td>OFF</td><td>OFF</td></tr>
</table></td><td></td></tr>
</table>

Note] For more detailed information, Please contact our R&D Institute.

3-10 Hardware Self Test

<table>
<tr><th>No</th><th>Update Method</th><th>Remark</th></tr>
<tr><td>1</td><td>•Verify DIP Switch (SW2) state. (Refer to Chapter 11)
<table>
<tr><th>SW No</th><td>1</td><td>2</td><td>3</td><td>4</td></tr>
<tr><th>STATE</th><td>OFF</td><td>OFF</td><td>OFF</td><td>OFF</td></tr>
</table></td><td></td></tr>
<tr><td>2</td><td> 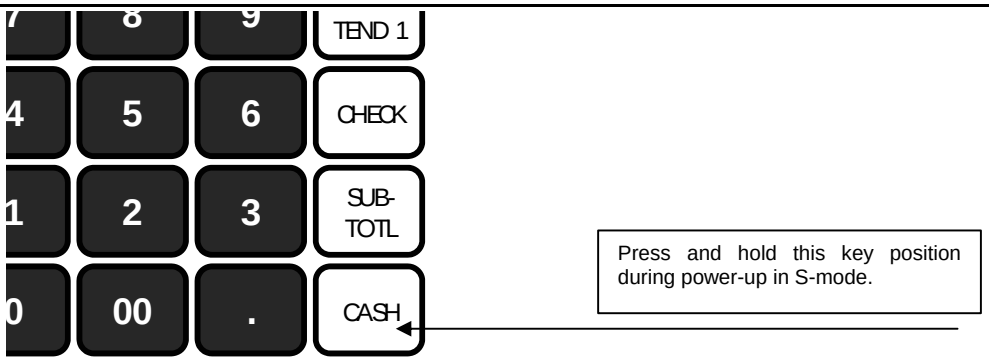
</td><td></td></tr>
<tr><td>3</td><td>• Press the upper left key of the keyboard, then the lower left key, then the upper right key, and finally press the lower right key.
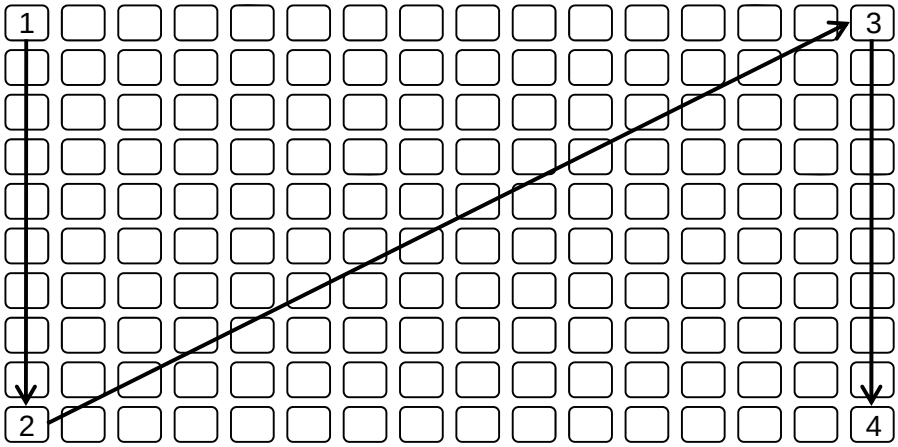
</td><td></td></tr>
</table>

3-10 Hardware Self Test

Test	Method	Remark
Display / Touch	•Press **"Display/Touch"** from the main menu in the Touch Screen. 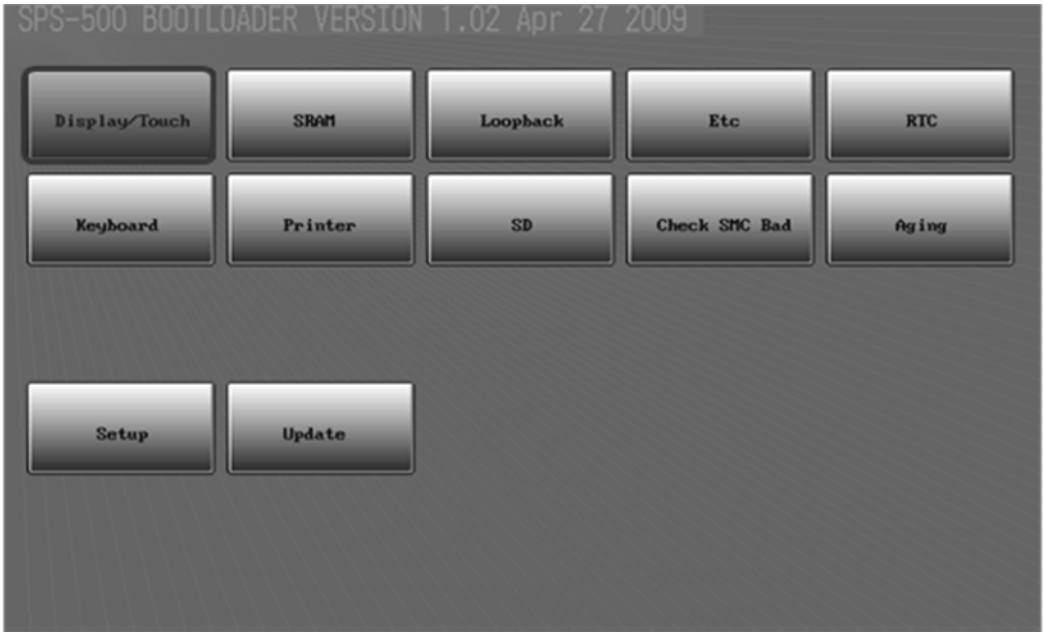 •Press one of following buttons. 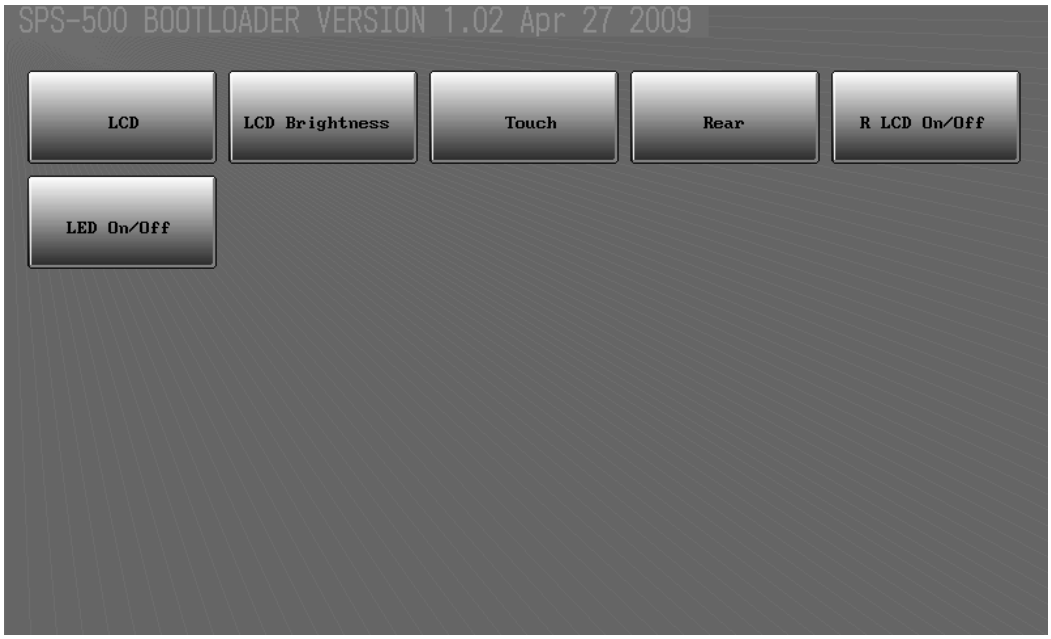 	

3-10 Hardware Self Test

Test	Method	Remark
SRAM	•Press **"SRAM"** from the main menu in the Touch Screen. 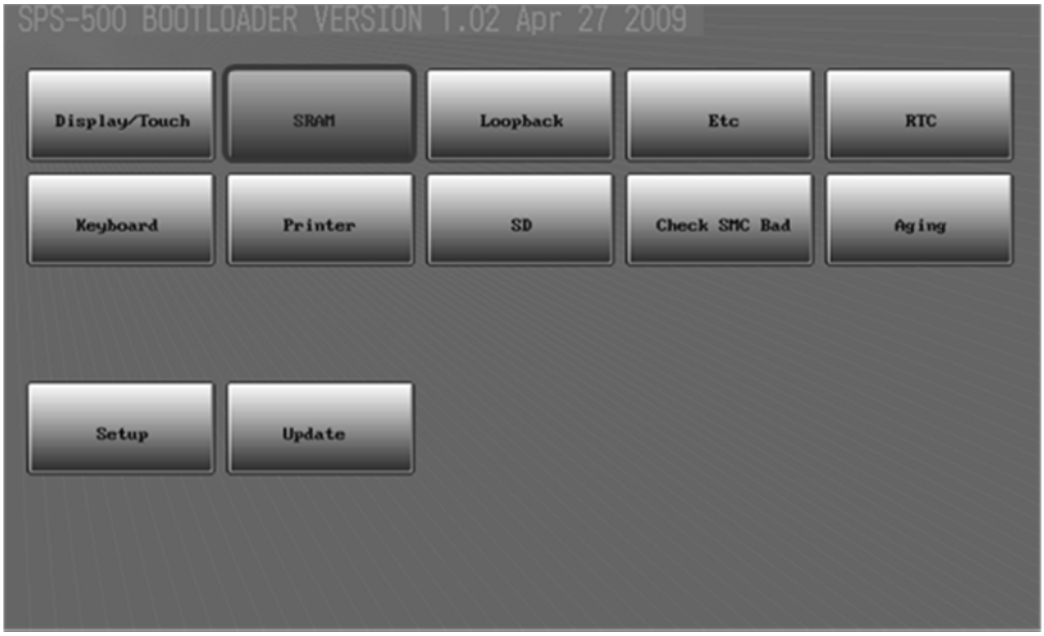 ** This test will clear all memory.	

3-10 Hardware Self Test

Test	Method	Remark
Loop Back	•Connect Loop back Test Connector. 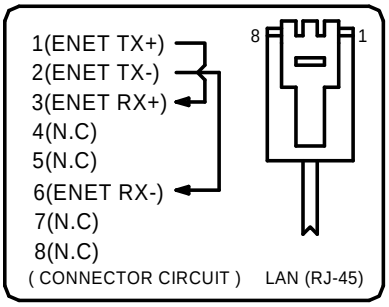 (IRC Test Connector) 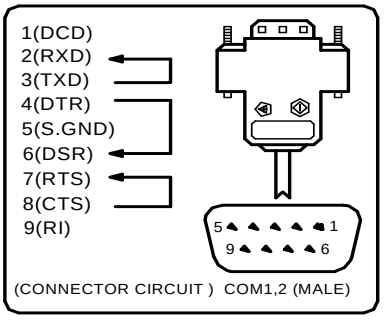 (RS-232C Test Connector) 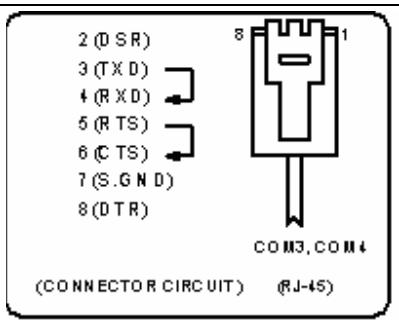 (RS-232C Test Connector) •Press **"Loopback"** from the main menu in the Touch Screen. 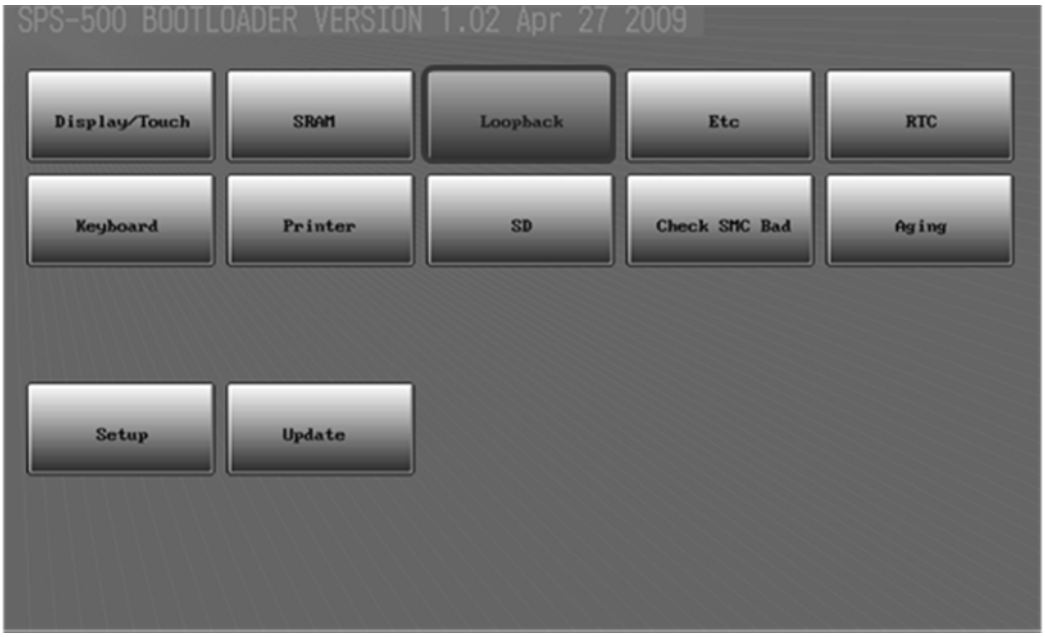 	

3-10 Hardware Self Test

Test	Method	Remark
Etc	•Press **"Etc"** from the main menu in the Touch Screen. 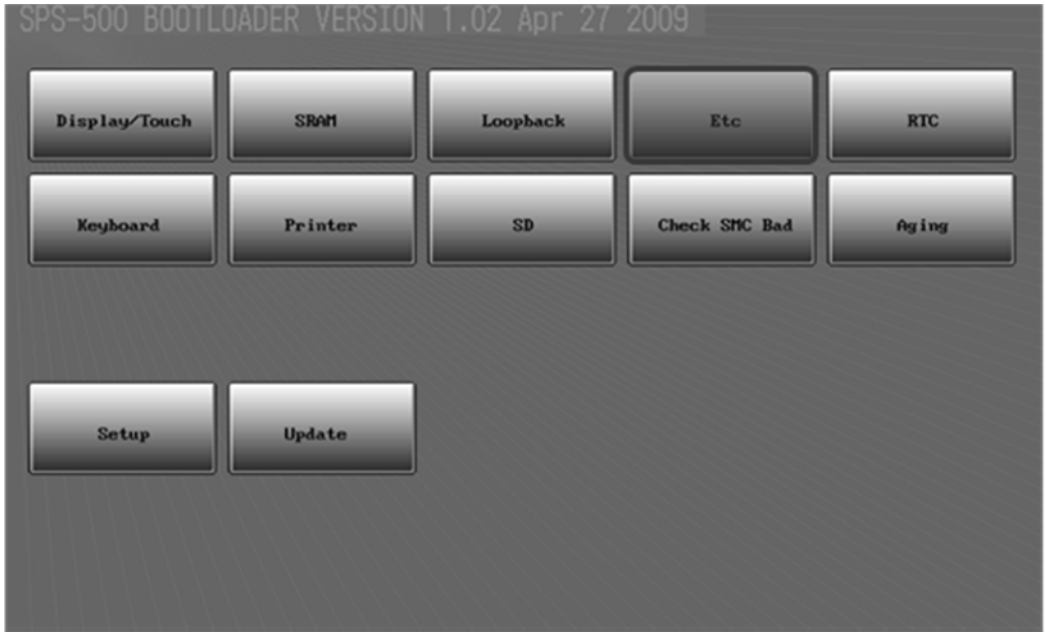 •This will test flash memory, SD card, Dallas key, MSR, Drawer and Printer.	

3-10 Hardware Self Test

Test	Method	Remark
RTC	•Press **"RTC"** from the main menu in the Touch Screen. 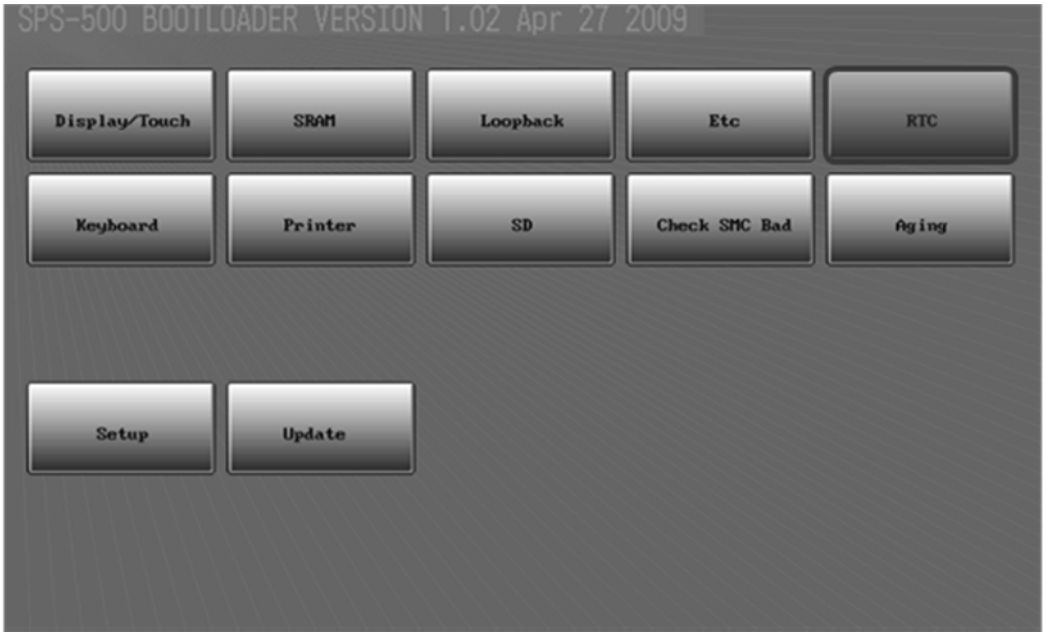 •Press "**RTC Write**" and enter date and time then press "**RTC Read**" to check the clock.  	

3-10 Hardware Self Test

Test	Method	Remark
Keyboard	•Press **"Keyboard"** from the main menu in the Touch Screen. 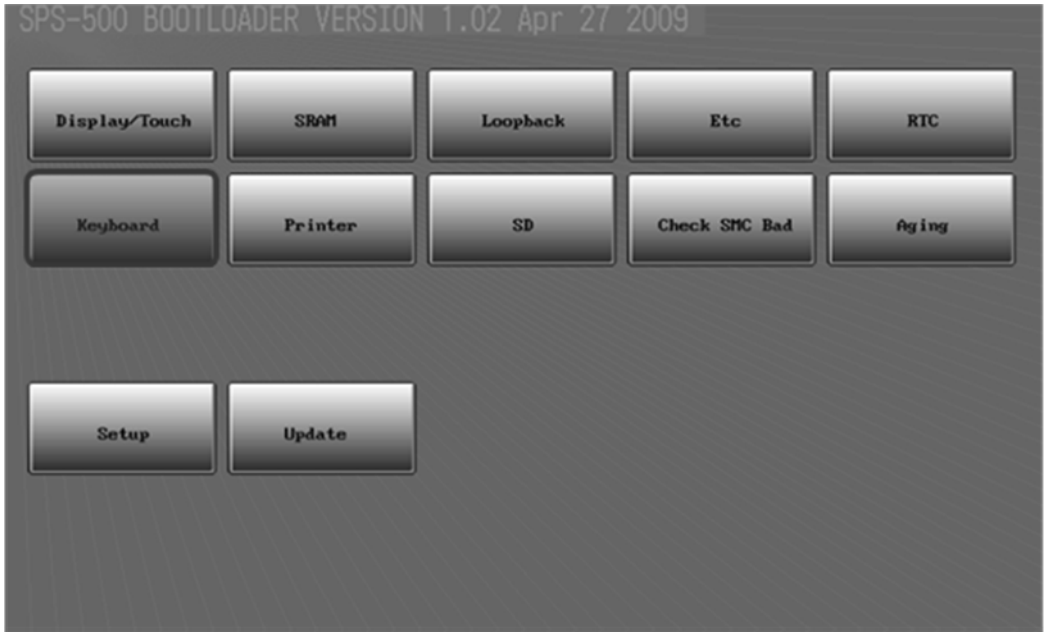 •Test keyboard and mode key. 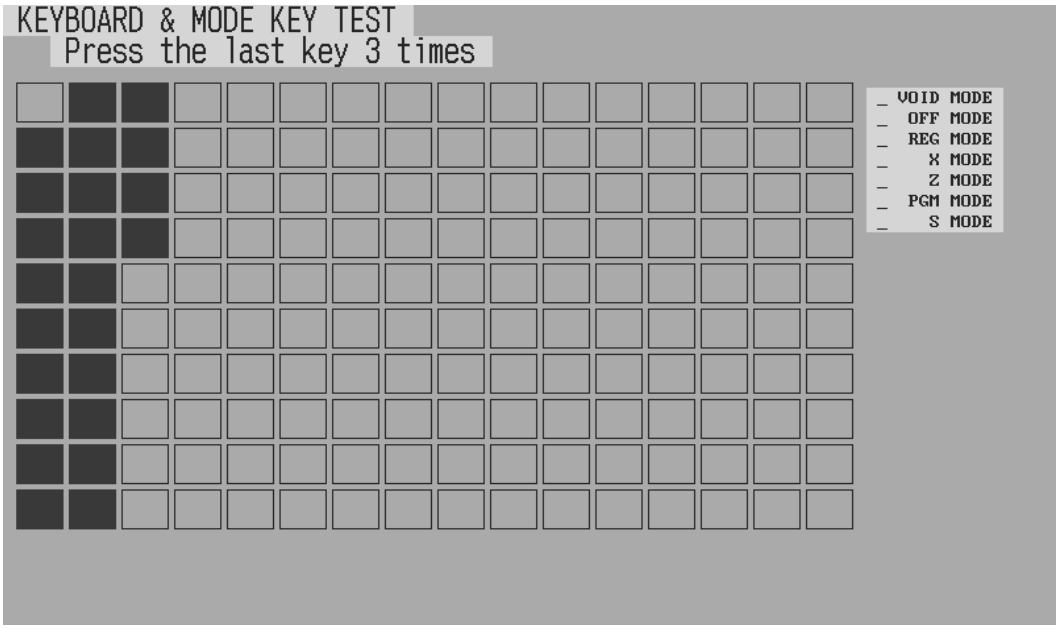 	

3-10 Hardware Self Test

Test	Method	Remark
Printer	•Press **"Printer"** from the main menu in the Touch Screen. 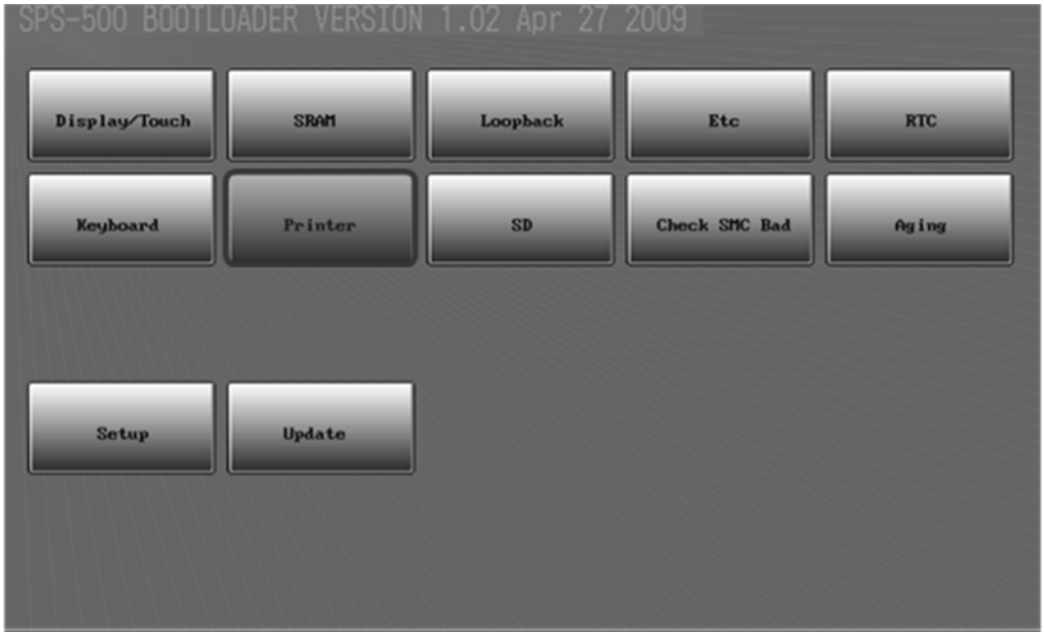 •Select one of following buttons. 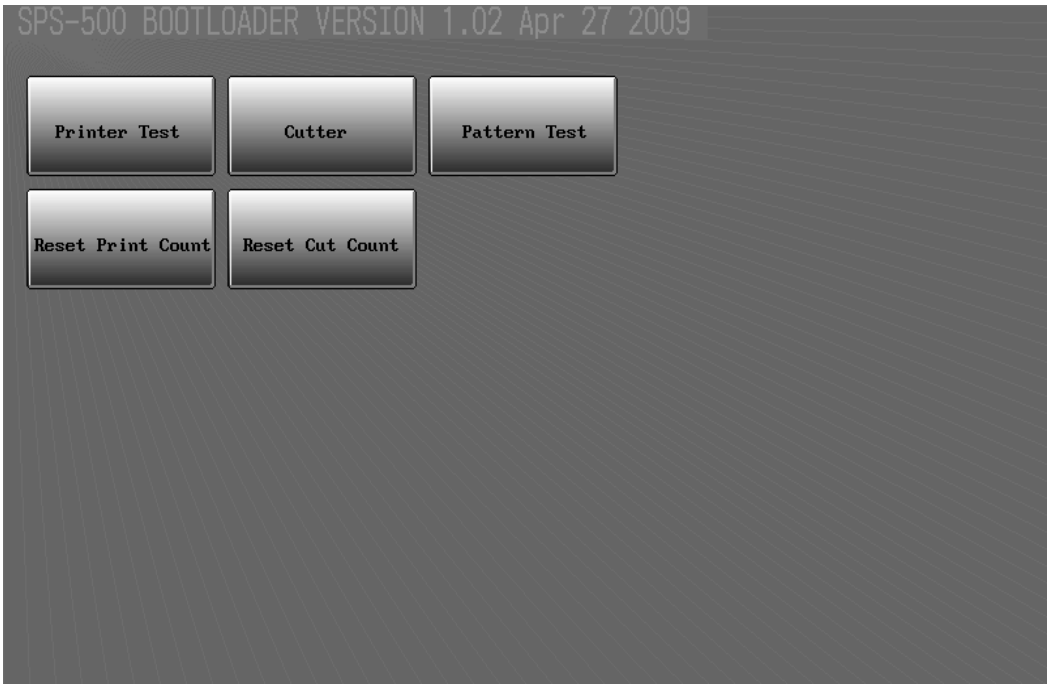 	

3-10 Hardware Self Test

Test	Method	Remark
SD card	•Press **"SD"** from the main menu in the Touch Screen. 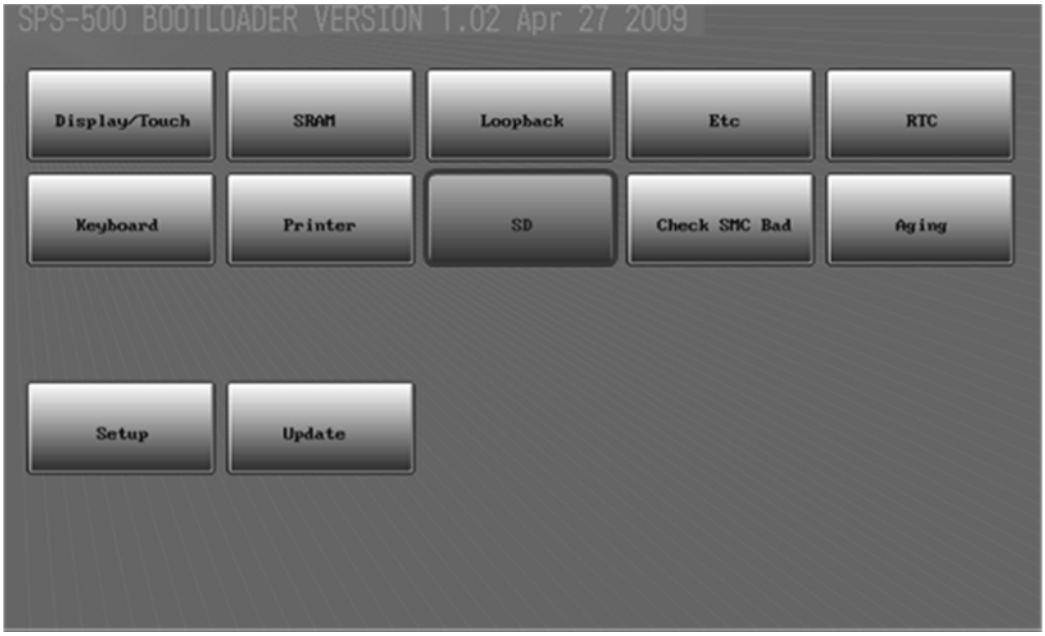 	
NAND flash bad block	•Press **"Check SMC Bad"** from the main menu in the Touch Screen. 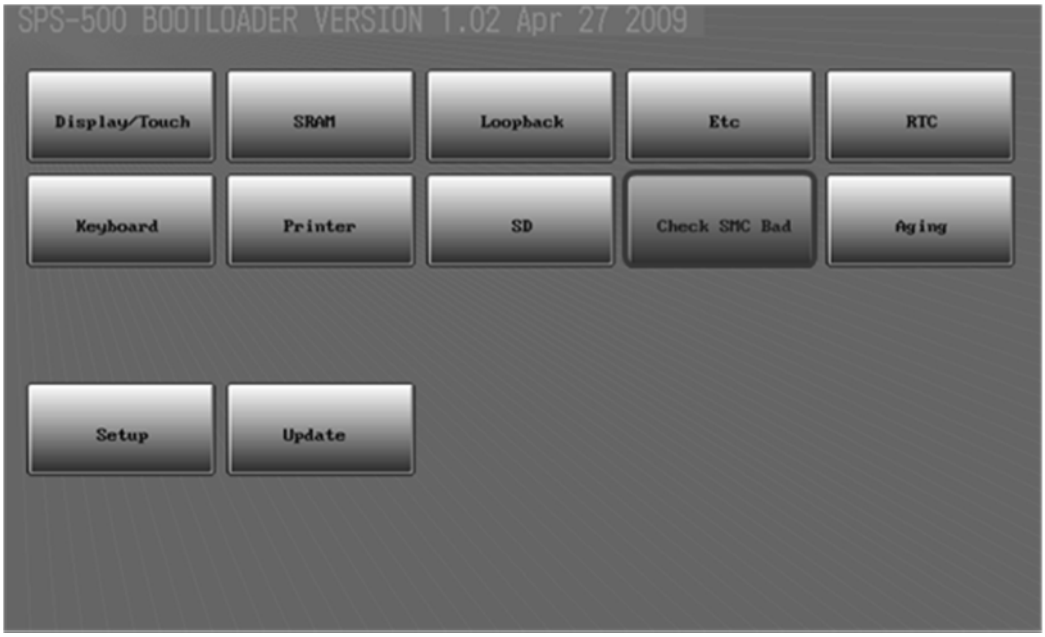 	

3-11 Setup

<table>
<tr><th>No</th><th>Update Method</th><th>Remark</th></tr>
<tr><td>1</td><td>•Verify DIP Switch (SW2) state. (Refer to Chapter 11)
<table>
<tr><th>SW No</th><td>1</td><td>2</td><td>3</td><td>4</td></tr>
<tr><th>STATE</th><td>OFF</td><td>OFF</td><td>OFF</td><td>OFF</td></tr>
</table></td><td></td></tr>
<tr><td>2</td><td> 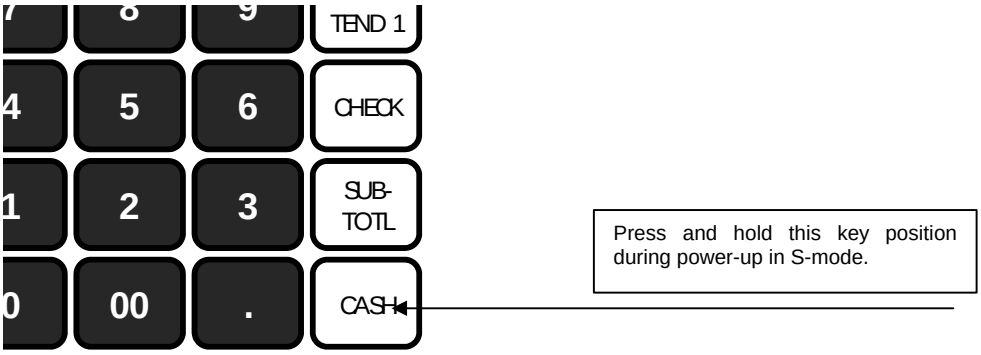
</td><td></td></tr>
<tr><td>3</td><td>• Press the upper left key of the keyboard, then the lower left key, then the upper right key, and finally press the lower right key.
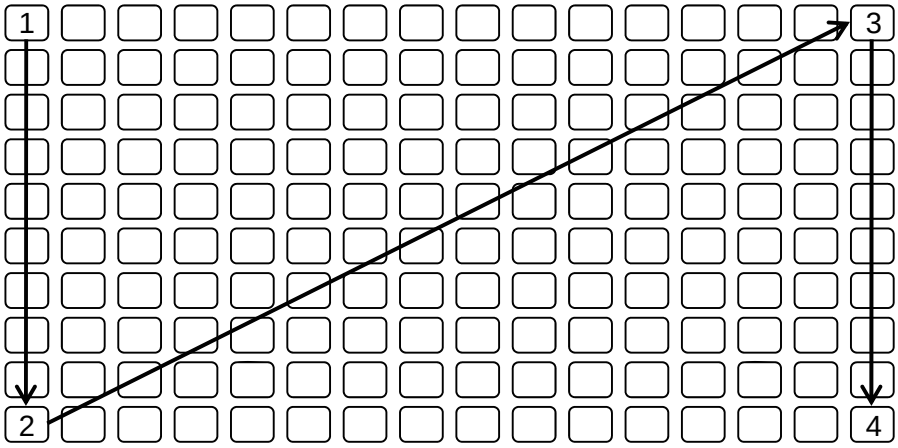
</td><td></td></tr>
</table>

3-11 Setup

Test	Method	Remark
4	•Press **"Setup"** from the main menu in the Touch Screen. 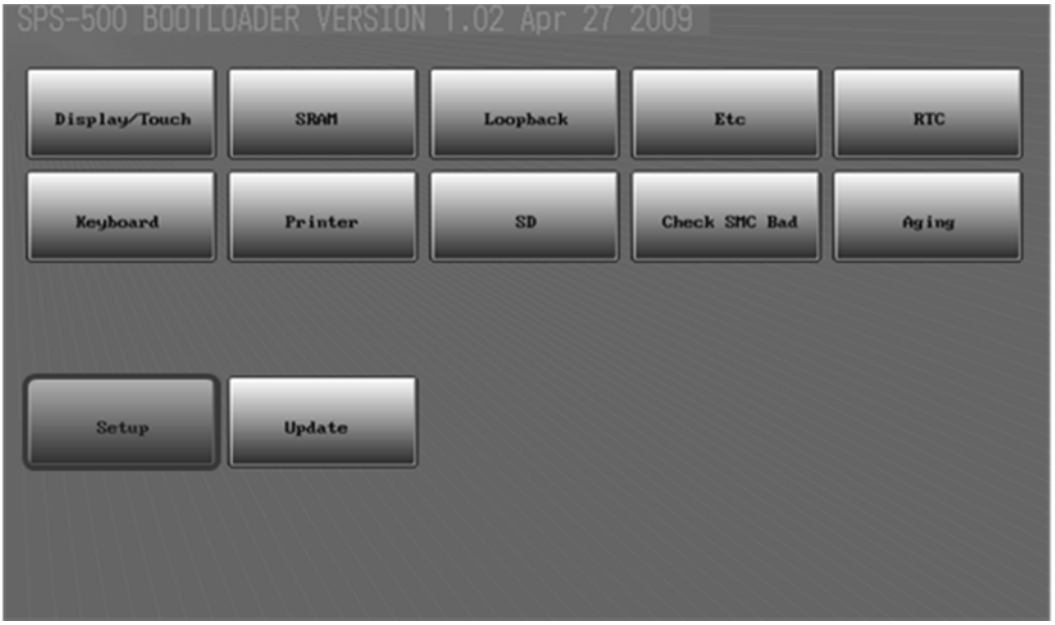 	
Write MAC Addr	• Press **"Write MAC Addr"** from the Touch Screen. 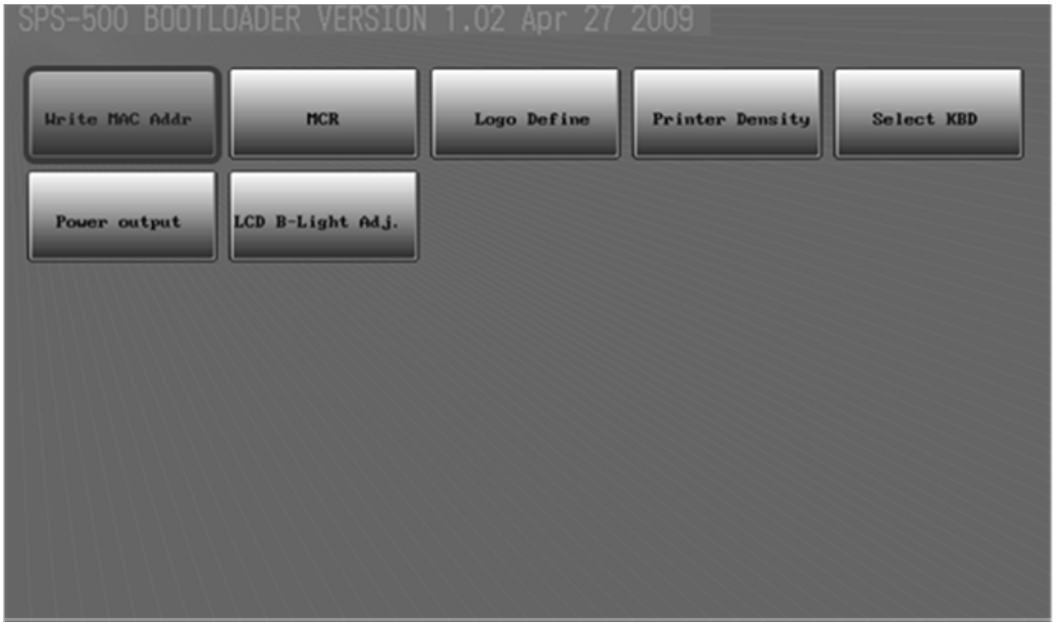 	

3-11 Setup

Test	Method	Remark
MCR track info.	• Press **"MCR"** from the Touch Screen. 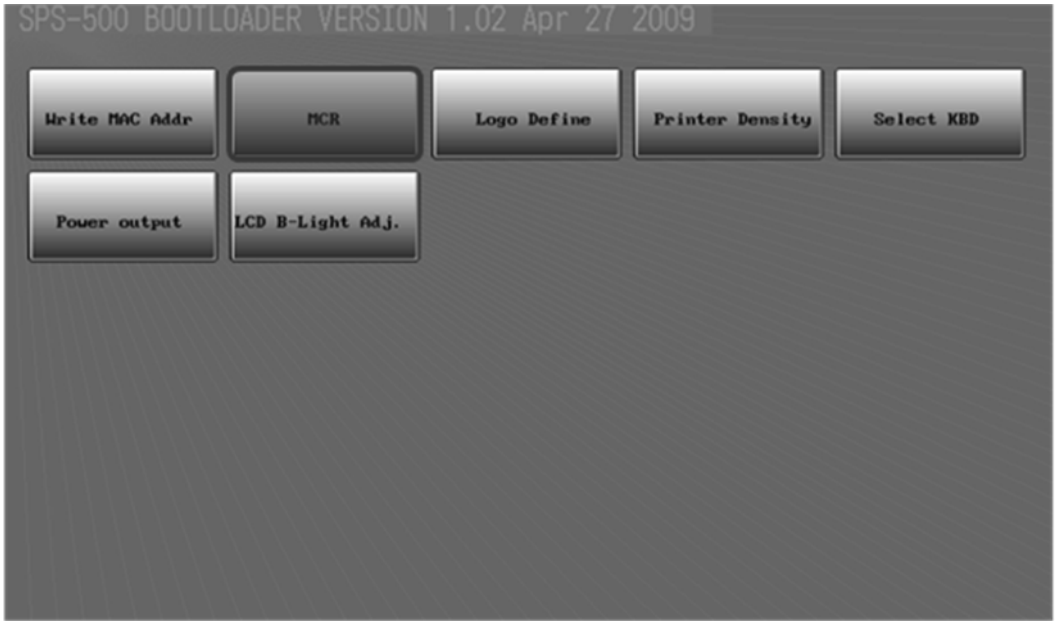 	
Printer Density	• Press **"Printer Density"** from the Touch Screen. 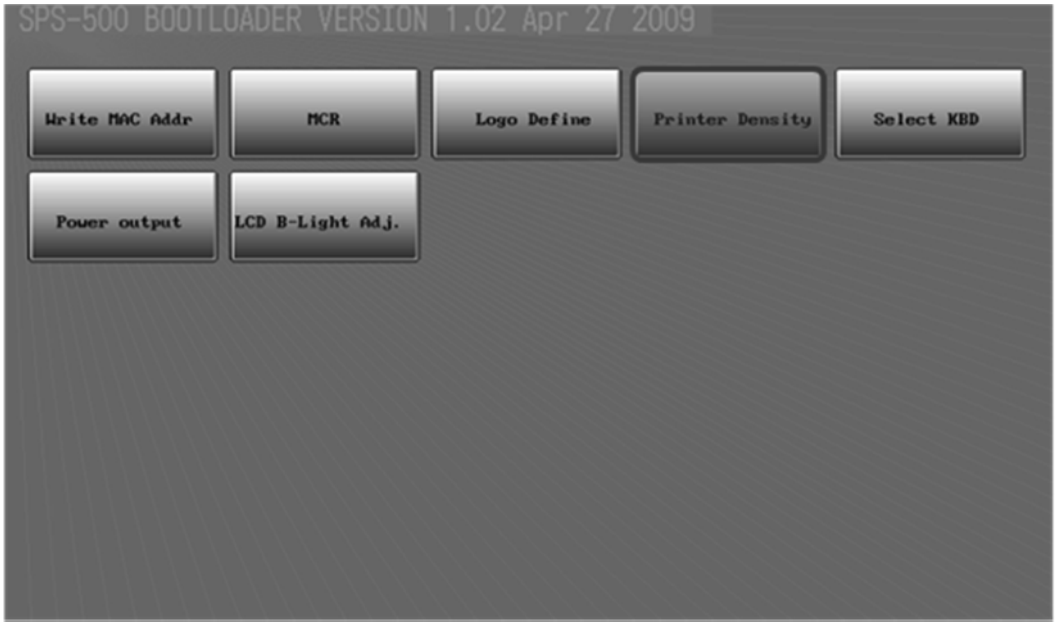 	

3-11 Setup

Test	Method	Remark
Keyboard type	• Press **"Select KBD"** from the Touch Screen. 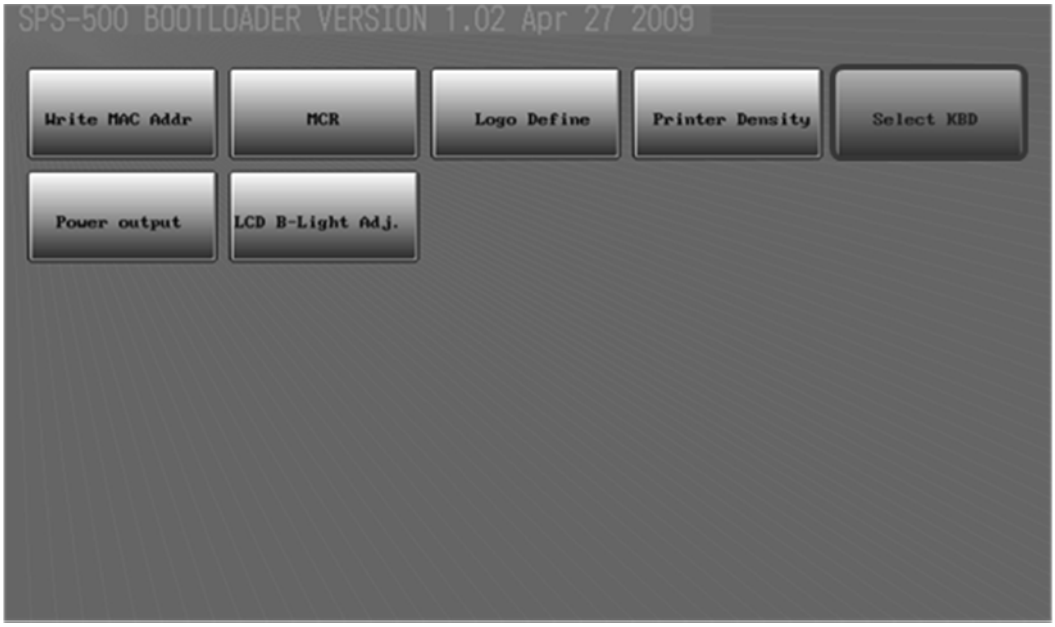	
Serial Port Power output	• Press **"Power output"** from the Touch Screen. 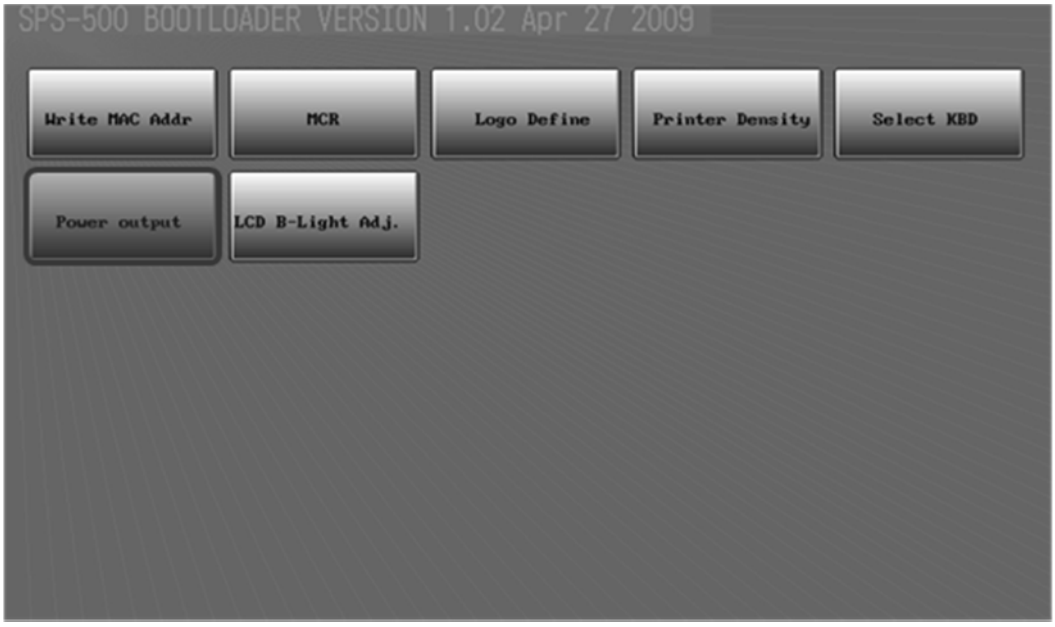	

3-11 Setup

Test	Method	Remark
LCD Backlit Adjust	• Press **"LCD B-Light Adj"** from the Touch Screen. 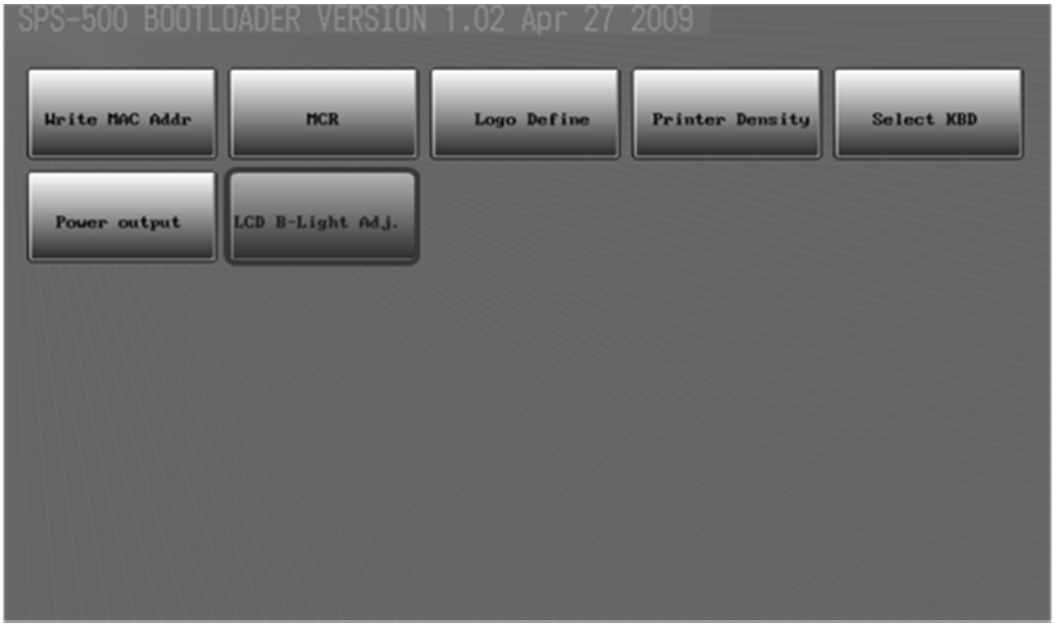	

3-12 System Configuration

3-12-1 Configuration

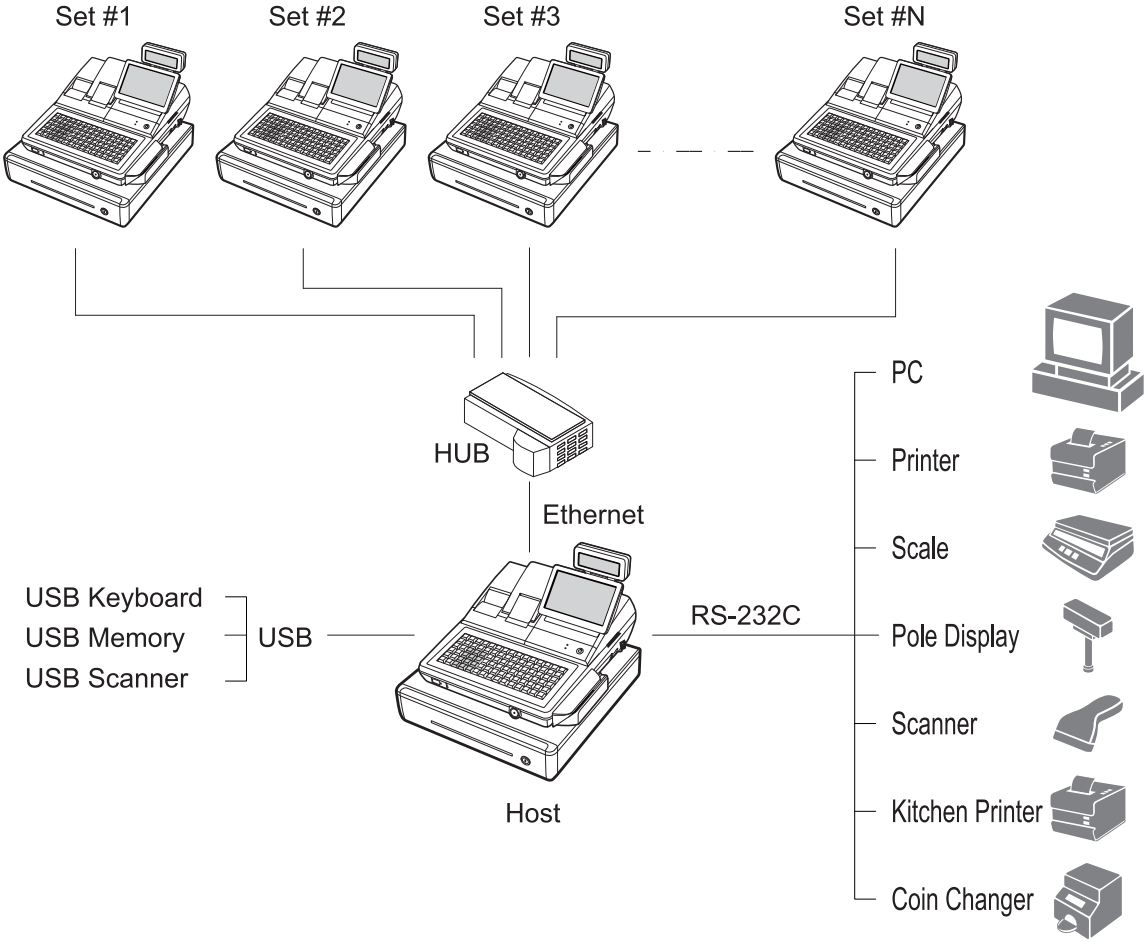

Figure 3-1 System Configuration

3-13 Installation

3-13-1 Options

No.	Item	Description	Remark
1	Dallas Key	5EA, 10EA, 15EA	Selectable
2	Water Proof	SPS-520 : Option SPS-530 : Default	
3	Memory	SRAM 6MByte (2Mbyte * 3)	
4	MSR	1Slot	

Table 3-1 Option

3-13-2 Supplies

No.	Item	Description	Remark
1	Paper Roll	SPS-520 : 2 EA SPS-530 : 1EA	
2	Mode Key	VD, REG, X, Z, P, C	
3	User Manual	1 EA	

Table 3-2 Supplies

3-13 Installation

3-13-3 Paper Roll Installation (SPS-520)

1. Open the cover printer.
2. Push the Orange Cap Lever toward the rear of the printer and lift up to open the paper cover.
3. Ensure that the paper is being fed from the bottom of the roll. Place the roll into the concave bottom of the printer. And put the leading edge of the paper over the printer in Figure3-3-①.
4. Close the printer cover slowly until it locks firmly.
5. Tear off the excess paper.

3-13-4 Paper Roll Installation(SPS-530)

1. Open the cover printer.
2. Pulling the Orange Lever will open paper cover in Figure3-2-①.
3. Ensure that the paper is being fed from the bottom of the roll. Place the roll into the concave bottom of the printer. And put the leading edge of the paper over the printer in Figure3-2-②.
4. Close the printer cover slowly until it locks firmly.
5. Tear off the excess paper.

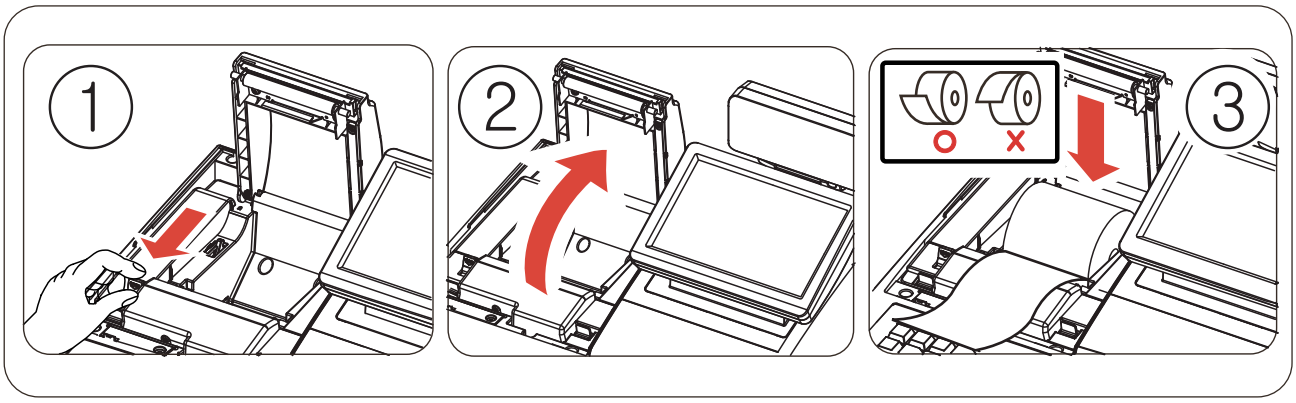

Figure 3-2 Paper Installation (SPS-530)

3-13 Installation

3-13-5 Take-Up Spool Installation

1. Before using the PRINTER(JOURNAL). Install the TAKE-UP SPOOL as described in the figure.
2. Push the ORANGE CAP LEVER towards the rear of the PRINTER and lift up to open the PRINTER COVER.
3. Unroll the paper about 400mm.
4. Ensure that the paper is being fed from the bottom of the roll.
5. Place the roll into the concave bottom of the PRINTER as shown in Figure3-3-①.
6. Put the leading edge of the paper over the PRINTER as shown in Figure3-3-①.
7. Close the PRINTER COVER.
8. Fold the end of the thermal paper about 20mm in length. Slide the leading end of the folded paper into the groove on the TAKE-UP SPOOL and wind it onto the SPOOL two or three turns as illustrated Figure3-3-②.
9. Put the removed GUIDE WINDING into the end of the TAKE-UP SPOOL WINDING and fix the removed GUIDE WINDING in the direction as shown in Figure3-3-③.
10. Place the TAKE-UP SPOOL into the HOLDER SPOOL behind the PRINTER(JOURNAL) above the roll paper as illustrated Figure3-3-④.
11. If the paper is loose, rewind the TAKE-UP SPOOL to tighten the paper.

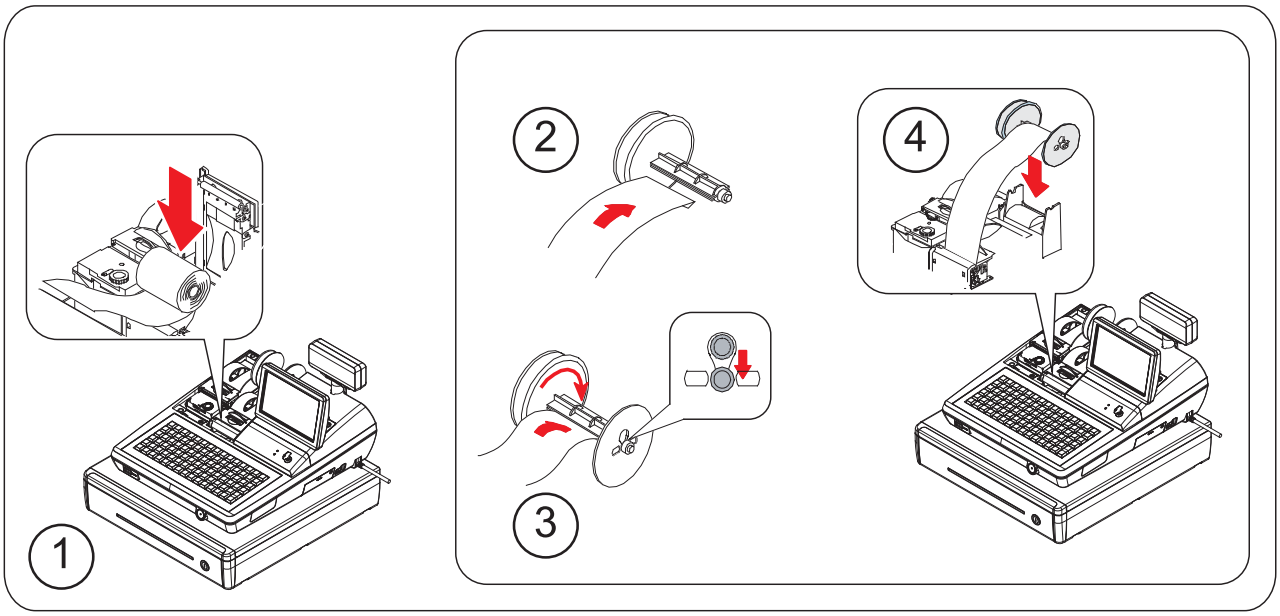

Figure 3-3 Paper & Spool Installation

3-13 Installation

3-13-6 Installation of MSR Assembly

Caution :
· Before installation, be sure to turn off the power switch.
· Use gloves to protect your hand from being cut by the angle and the chassis.
· Connect all the cables correctly. When connecting or disconnecting the cables, be careful not to apply stress to the cables. (It may cause disconnection)
· Be careful not to bind interface cables and AC power cord together.

1. Cut off the area (MSR assembly area) shown in the Figure 3-4-① by using a (-) shaped screw driver.
2. Figure 3-4-② shows the difference before and after.

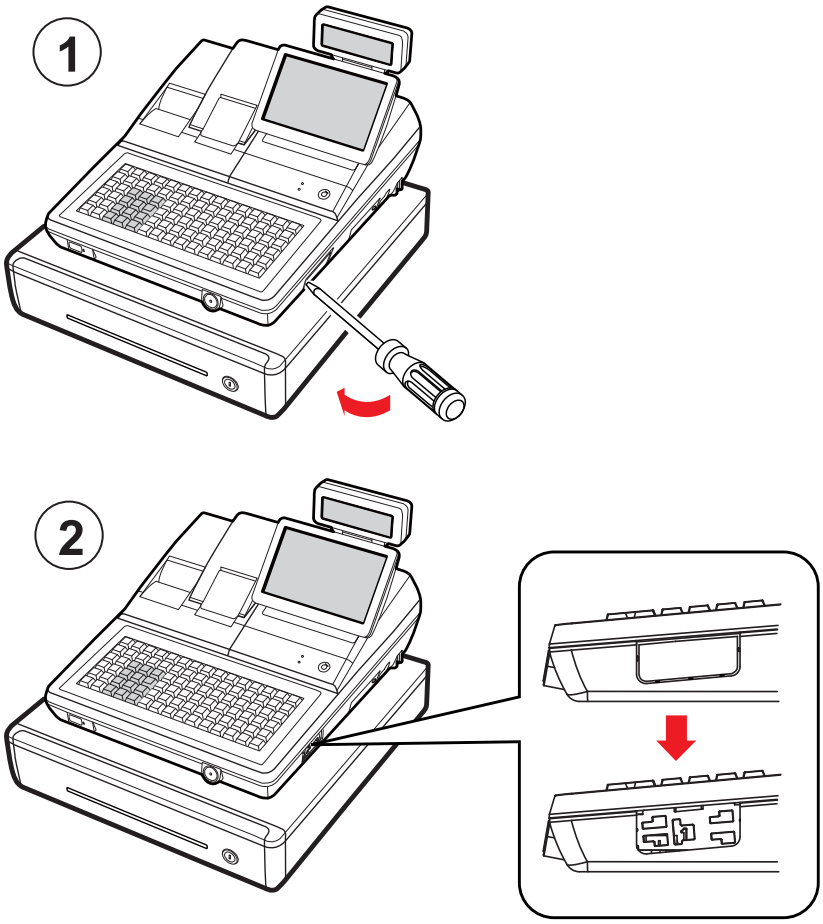

Figure 3-4 MSR Installation (1)

3-13 Installation

3-13-7 Installation of MSR Assembly

1. Connect Ground Wire & MSR Harness of MSR Assembly to the main set as shown in Figure 3-5-①-ⓐ.
2. Tidy up the connectors of Ground Wire & MSR Harness by inserting them into the MSR Assembly (Connectors should be hidden inside the MSR Assembly), Figure 3-5-①-ⓑ.
3. Insert MSR Assembly into the main set bracket holes as in Figure 3-5-②, Figure 3-5-③.
4. Tighten MSR Assembly by moving it to the direction shown in Figure 3-5-④.

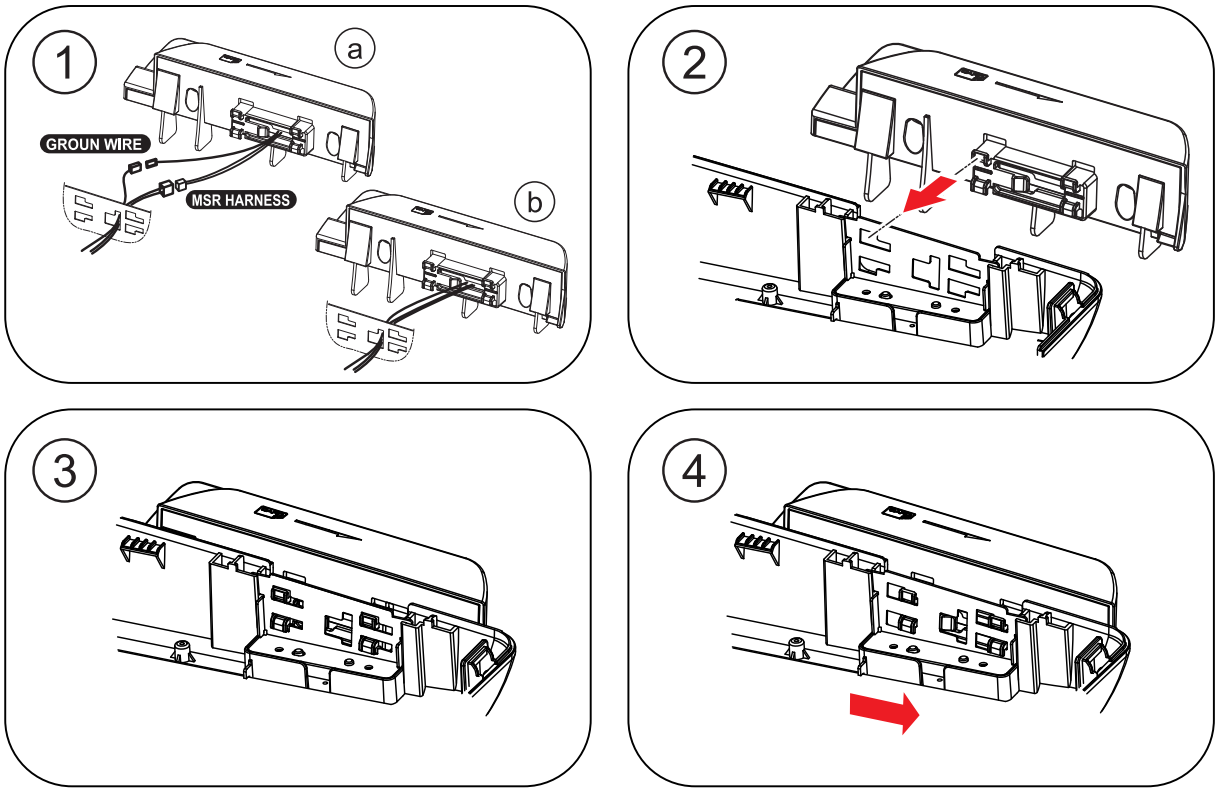

Figure 3-5 MSR Installation (2)

3-13 Installation

3-13-8 Installation of MSR Assembly

1. Figure 3-6 shows the MSR Assembly is in position

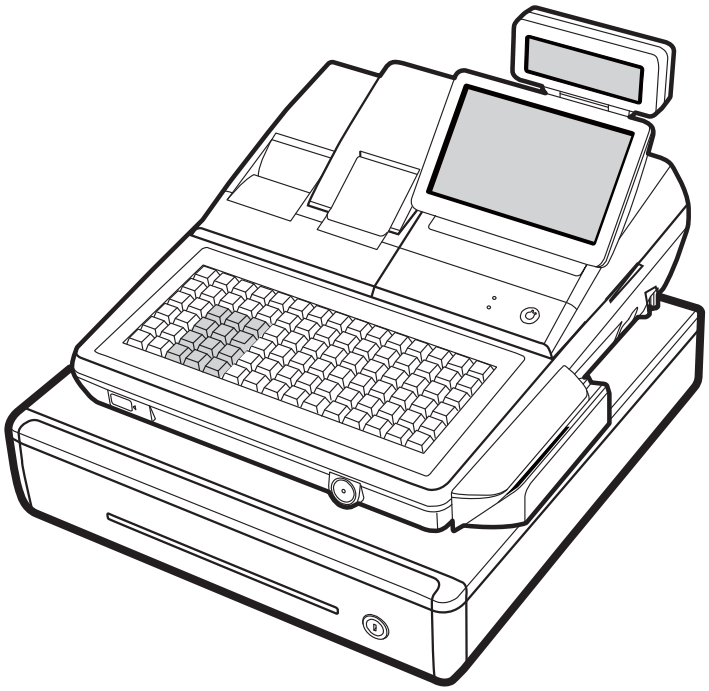

Figure 3-6 MSR Installation (3)

3-13 Installation

3-13-9 Installation of Memory Card

Caution :
· Before installation, be sure to turn off the power switch.
· Use gloves to protect your hand from being cut by the angle and the chassis.
· Connect all the cables correctly. When connecting or disconnecting the cables, be careful not to apply stress to the cables. (It may cause disconnection)
· Be careful not to bind interface cables and AC power cord together.

※ Warning.
Turn off the system mains power before attempting to install Memory Card.
If Memory Card is installed while power is on, the system will seriously be damaged.

1. Unscrew Memory Card Cover by using a (+) shaped screw driver, Figure 3-7.

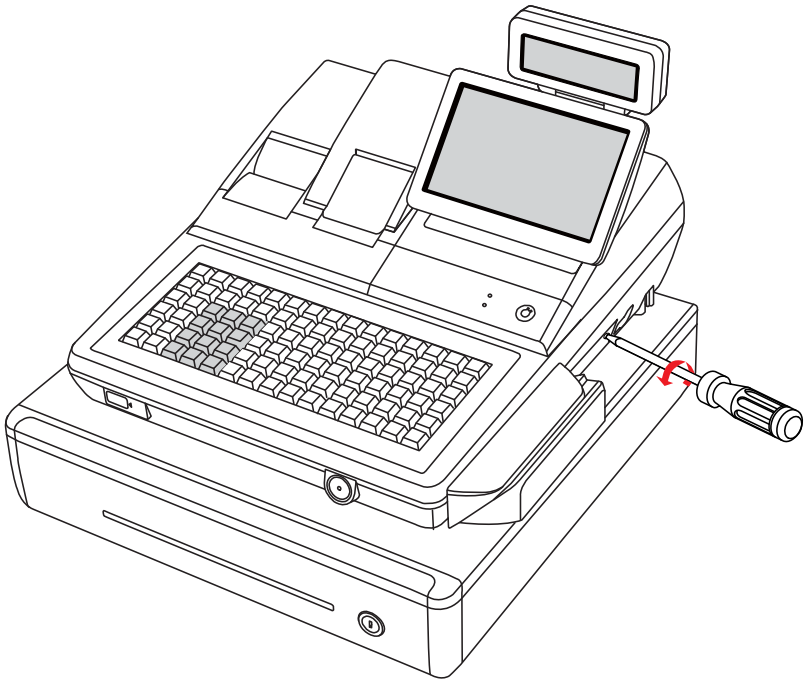

Figure 3-7 Memory Card Installation (1)

3-13 Installation

3-13-9 Installation of Memory Card

1. Open up Memory Card Cover by direction shown in Figure 3-8-①.
2. Insert Memory Card into the memory hole, Figure 3-8-②. If Memory Card is installed properly, the below can be shown.
   (1) If no Memory inserted: 200000 will be shown.
   (2) If 2MB Memory inserted: 400000 will be shown.
   (3) If 6MB Memory inserted: 800000 will be shown

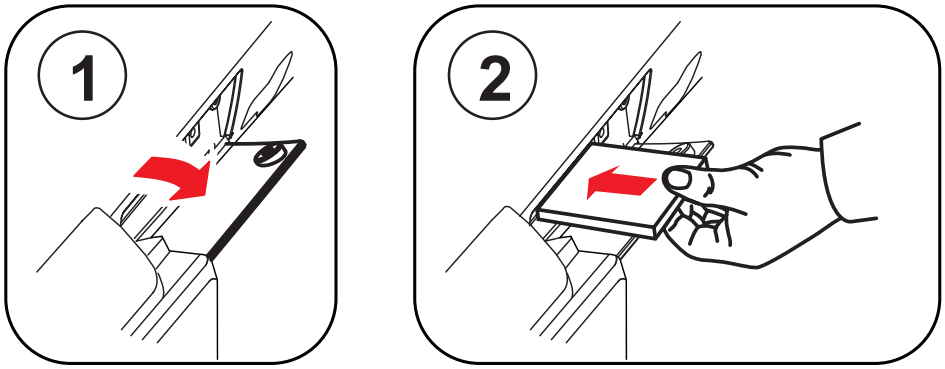

Figure 3-8 Memory Card Installation (2)

3-13 Installation

3-13-10 Uninstallation of Memory Card

Caution :
· Before installation, be sure to turn off the power switch.
· Use gloves to protect your hand from being cut by the angle and the chassis.
· Connect all the cables correctly. When connecting or disconnecting the cables, be careful not to apply stress to the cables. (It may cause disconnection)
· Be careful not to bind interface cables and AC power cord together.

※ Warning.
Turn off the system mains power before attempting to uninstall Memory Card.
If Memory Card is uninstalled while power is on, the system will seriously be damaged.

1. Unscrew Memory Card Cover by using a (+) shaped screw driver, Figure 3-9.

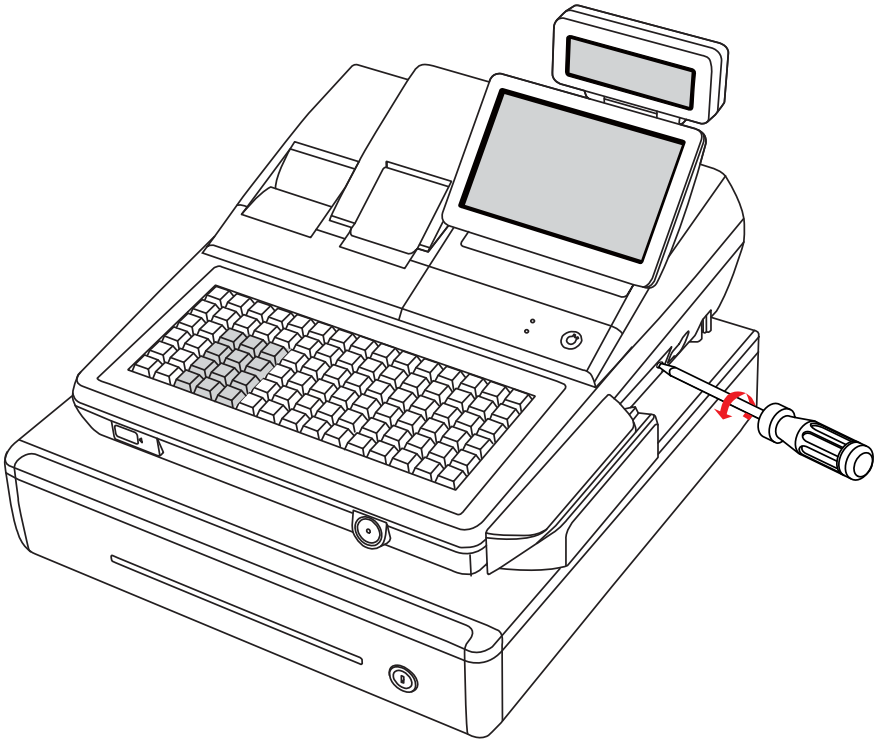

Figure 3-9 Memory Card Uninstallation (1)

3-13 Installation

3-13-10 Uninstallation of Memory Card

1. Open up Memory Card Cover by direction shown in Figure3-10-①.
2. Push the rounded area as shown in the Figure 3-10-② by using a sharp object, i.e. pin or paper clip, Memory Card will be ejected.
3. Take Memory Card as shown in Figure 3-10-③.

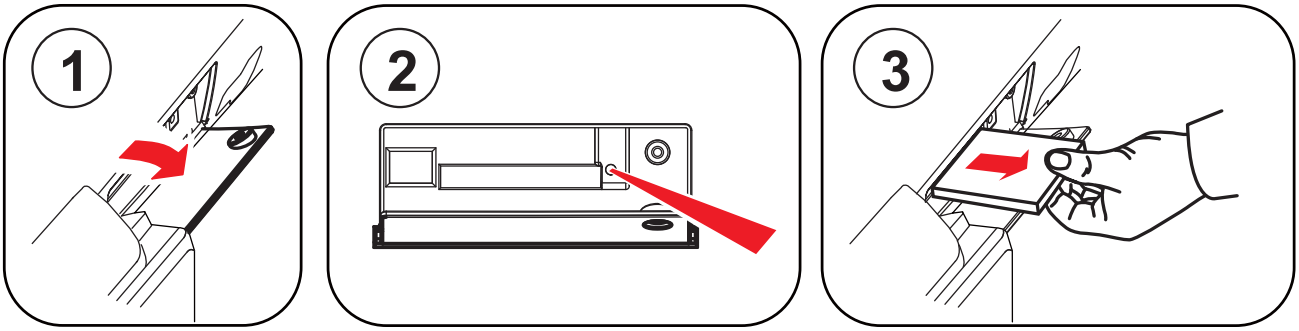

Figure 3-10 Memory Card Uninstallation (2)

3-14 Operation

Note: Before using this POS for the first time, leave it powered ON in the REG mode for at least 24 hours. This allows the Ni-MH battery, which maintains the POS memory while the power is OFF, to fully charge.

3-14-1 Mode Switch

The position of the Mode Switch determines the action of the POS. The modes are described in Table 3-3

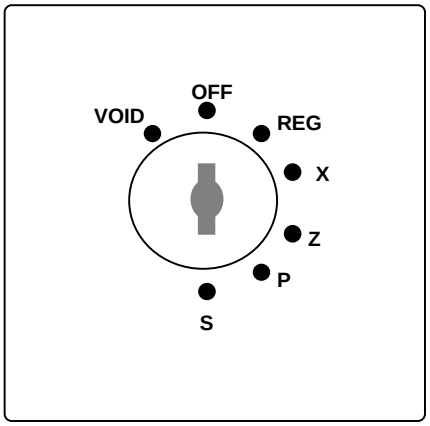

Figure3-11 Mode Switch

Mode	Key	Function
VOID	VD	Use to void (correct) items outside of a sale.
OFF	-	The Register is inoperable.
REG	REG	Used for normal registrations.
X	X	Used to read register reports and perform other manager functions.
Z	Z	Used to read register reports and reset totals to zero.
P	P	Used to program the register
S	C	Used for H/W tests and special setting.

Table3-3 Mode Switch Function

The mode keys can be used to access the following key lock positions.

Mode	Accessible Position	Remark
VOID	Void, Off, Register, Manager	
X	Off, Register, Manager	
Z	Off, Register, Manager, Clear Totals	
PGM	Void, Off, Register, Manager, Clear Totals, Program	
S	Void, Off, Register, Manager, Clear Totals, Program, Service Mode	

Table3-4 Key Function

Note : Key can be removed from the key lock in the OFF or REG position.

3-14 Operation

3-14-2 All Clear

This step insures that the cash register is cleared of any totals or programming. After this procedure, the cash register is ready for programming and operation.

WARNING: This is a one time procedure. Do not repeat this procedure after the cash register is Programmed. It causes all programs and totals to be erased and to be default.

1. Turn off the power.
2. Turn the control lock to the unmarked position one position clockwise from the PGM position.
3. Press and hold the key position where the CHECK key is located on the default keyboard layout.

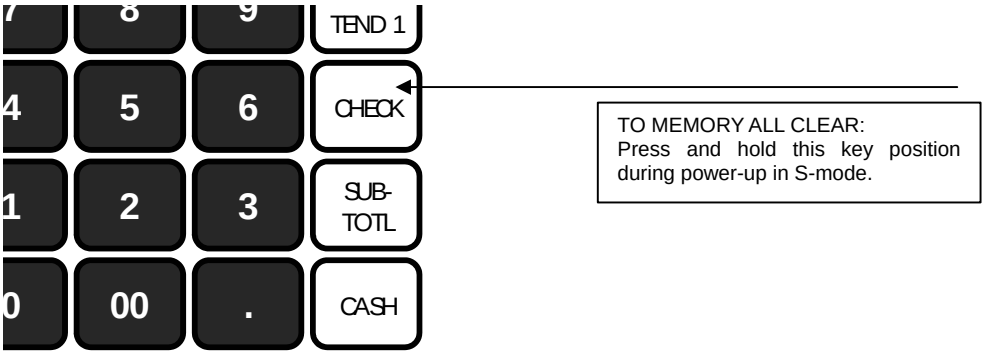

4. While continuing to hold the CHECK key, turn the power switch to the ON position.
5. When the buzzer beeps, press the upper left key of the keyboard, then the lower left key, then the upper right key, and finally press the lower right key.

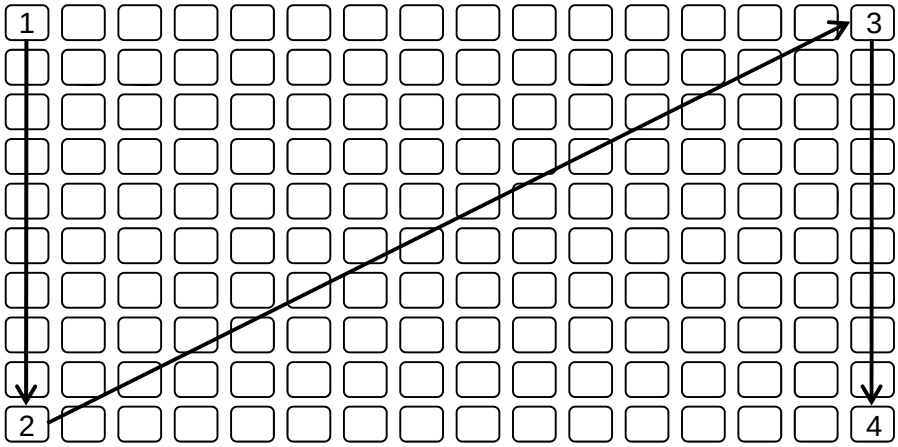

6. Press REG NO(1-32) and '**ENTER**'

Memo

4 Disassembly and Assembly

Caution :
· Before installation, be sure to turn off the power switch.
· Use gloves to protect your hand from being cut by the angle and the chassis.
· Connect all the cables correctly. When connecting or disconnecting the cables, be careful not to apply stress to the cables. (It may cause disconnection)
· Be careful not to bind interface cables and AC power cord together.

4-1 Disassembling the Case Upper Block

4-1-1 Ass'y Case Upper

1. Open the ASS'Y COVER PRINTER(B) and lift it off. (Page7-1)
2. Remove the five screws(C31:4pcs, C30:1pcs) from the ASS'Y CASE LOWER(G). (Page7-5)
3. Separate the four harnesses(ⓔ,ⓖ,(gg),ⓗ) from the I/O BOARD(G-19). (Page7-18)
4. Lift off the ASS'Y CASE UPPER(C) from the ASS'Y CASE LOWER(G). (Page7-1)

4-1-2 Ass'y LCD Display

1. Separate the ASS'Y LCD DISPLAY(A) from the ASS'Y CASE UPPER (C). (Page7-1)
2. Remove the two CAP RUBBER(A-15) on the ASS'Y LCD DISPLAY(A).(Page7-2)
3. Remove the two screws(A-16) on the ASS'Y CASE UPPER(C). (Page7-2)
4. Remove the four screws(A-18) on the LCD HOLDER(A-17) and separate the LCD HOLDER(A-17).
5. Remove the two screws(A-12) from the LCD REAR(A-11) and separate the LCD REAR(A-11). (Page7-2)
6. Remove the six screws(A-9) from the BRKT LCD(A-10) and separate the LCD FRONT(A-1).(Page7-2)
7. Separate the TOUCH PANEL(A-3) and DISPLAY-LCD(A-6) from the BRKT LCD(A-10). (Page7-2)

4-1-3 Ass'y Rear (Turret) Display

1. Separate the ASS'Y TURRET from the ASS'Y CASE UPPER (C). (Page7-5)
2. Remove the screw(C-32) on the TURRET REAR(C-1). (Page7-5)
3. Separate the TURRET REAR(C-1) and remove the two screws(C-5).
4. Separate the UNIT-REAR DISPLAY (C-6) from the TURRET FRONT(C-7). (Page7-5)

4-1-4 Ass'y Cover Mode Switch

1. Separate the ASS'Y COVER MODE S/W from ASS'Y CASE UPPER(C). (Page7-5)
2. Remove the four screws(C-15 and C-20) on the ASS'Y COVER MODE S/W and separate the ASS'Y SWITCH ROTARY (Reference:C-16), LED BOARD(C-19) from the COVER MODE S/W(C-12). (Page7-5)
3. Remove the two screws(C-13) on the ASS'Y SWITCH ROTARY(Reference:C-16) and separate the BRKT MODE SWITCH(C-14) and the SWITCH ROTARY (C-16). (Page7-5)

4-2 Disassembling the Case Lower Block

4-2-1 Ass'y Auto Cutter [SPS-520]

1. Open the ASS'Y COVER PRINTER(B) and lift it off. (Page7-1)
2. Open the PRINTER COVER of Ass'y Printer, Remove the screw(E-20) and then separate the GROUND from the HOLDER CUTTER(D-21). (Page7-11)
3. Remove the two screws(G-6) on the ASS'Y CASE LOWER(G) and lift up the ASS'Y CUTTER(E) with care because the harness of ASS'Y CUTTER(E) is connected to the SUB PRT CONN BOARD(D-33). (Page 7-7,Page 7-18)
4. Separate the harness(E-17) from the SUB PRT CONN BOARD(D-33). (Page7-7,Page7-11)
5. Lift up the ASS'Y CUTTER(E). (Page7-1)

4-2-2 Ass'y Printer (Receipt & Journal) [SPS-520]

1. Open the ASS'Y COVER PRINTER(B) and lift it off. (Page7-1)
2. If you have the ASS'Y CUTTER(E), first separate it. (Page7-1)
3. Separate the GROUND(D-14) from the PAPER SUPPLY(D-32). (Page7-7)
5. If you don't have the ASS'Y CUTTER(E), remove the screw(D-35) from the PAPER SUPPLY (D-32) and lift up the COVER FRONT(D-36). (Page7-7)
6. Remove the two screws(G-1) from the ASS'Y CASE LOWER(G). (Page7-18)
7. Separate the ASS'Y PRINTER(RECEIPT & JOURNAL) from the ASS'Y CASE LOWER(G). (Page7-18)

4-2-2 Ass'y Printer [SPS-530]

1. Open the ASS'Y COVER PRINTER(B) and lift it off. (Page7-1)
2. Separate the GROUND(ⓤ and ⓚ) from the ASS'Y PRINTER(D). (Page7-9)
3. Remove the two screws(G-65) from the ASS'Y CASE LOWER(G). (Page7-18)
7. Separate the ASS'Y PRINTER from the ASS'Y CASE LOWER(G). (Page7-18)

4-2-3 Ass'y Spool Motor [SPS-520]

1. Separate the harness(Reference:G-16) of the ASS'Y MOTOR SPOOL(Reference:G-16) from the I/O BOARD(G-19). (Page7-18)
2. Remove the screw (G-14) on the ASS'Y CASE LOWER (G) and separate the ASS'Y HOLDER SPOOL (Referance:G-15) from the ASS'Y CASE LOWER(G). (Page7-18)
3. Remove the two screws (G-11) on the HOLDER SPOOL(G-15) and separate the ASS'Y GEAR SPOOL(Reference:G-13).(Page7-18)
4. Separate the GEAR SPOOL (G-13) and the RUBBER SPOOL(G-12) from the ASS'Y GEAR SPOOL(Reference: G-13).(Page7-18)
5. Remove the two screws (G-11) from the HOLDER SPOOL(G-15) and separate the ASS'Y MOTOR SPOOL(G-16).(Page7-18)

4-2-4 Ass'y key Board

1. Separate the two FPC cables((tt),(vv)) from the I/O BOARD(G-19) And then lift off the ASS'Y KBD(F).(Page7-18)

4-2-5 Ass'y Dallas Key

1. Disconnect the Harness(nn) of the ASS'Y DALLAS KEY(G-54) from the I/O BOARD(G-19). (Page7-18)
2. Lift up the ASS'Y DALLAS KEY.
3. If don't use it, only lift up COVER FRONT(G-57) from the ASS'Y CASE LOWER(G).(Page7-15,Page7-18)

Note

There are three types in DALLAS KEY; ADDIMAT KEY, DALLAS KEY or ADDIMAT KEY

4-2 Disassembling the Case Lower Block

4-2-7 Ass'y I/O PBA and Main PBA

1. Separate the fifteen harnesses(ⓦ,(hh),(mm),(gg),(hh),(kk),(gg),ⓡ,ⓔ,ⓖ,(uu),ⓗ,ⓘ,(jj),ⓨ) and remove the eight screws(G-17).
   Separate the MAIN BOARD(G-18).(page7-18)
2. Remove the screw(G-22) and separate the PLATE SHIELD(G-21) from the ASS'Y LOWER(G).

4-2-8 Ass'y USB PBA

1. Separate the harnesses(mm) from the I/O PBA(G-19)
   Lift up the USB BOARD(G-33).(Page7-18).

4-3 Disassembling the Auto Cutter Block [SPS-520]

Caution :

· Be careful to prevent the MOVABLE BLADE(E-5) from damage. If it is damaged, technical problems occur on the ASS'Y CUTTER(E). (Page7-11)

4-3-1 Ass'y Cutter

1. Remove the two screws (E-20) and the GROUND. Separate the HOLDER CUTTER (E-21) from the ASS'Y CUTTER (E). (Page7-10)
2. Remove the KNOB CUTTER (E-3) and the four screws(E-2) from the BOTTOM CUTTER(E-15). (Page7-11)
3. Make the ASS'Y BOTTOM CUTTER (E-15) horizontally and lift up the ASS'Y COVER CUTTER(E-4) vertically to avoid the material damage. (Page7-11)
4. First, Let's separate the ASS'Y COVER CUTTER . (Page7-11)
   4-1. Turn the COVER CUTTER (E-4) back and remove the screw (E-8).
   4-2. Lift up the SPRING CUTTER (E-7), the BUSHING CUTTER (E-6) and the MOVABLE BLADE(E-5) vertically in order.
5. Let's separate the ASS'Y BOTTOM CUTTER (E-15). (Page7-11)
   5-1. Be careful to prevent the teeth of the gears from damage. If the teeth of the gears is damaged, the ASS'Y CUTTER (E) don't work.
   5-2. Lift up the GEAR CAM (E-9), the GEAR REDUCTION(E-12) and the GEAR KNOB(E-13) vertically in order.
   5-3. Remove the screw (E-10) and separate the SWITCH MICRO(E-11) from the BOTTOM CUTTER(E-15).
   5-4. Remove the two screws (E-14). Move the MOTOR ASS'Y(E-16) right slow and Put it down vertically not to touch the PINION GEAR of the MOTOR ASS'Y(E-16) to the BOTTOM CUTTER(E-15).

MEMO

5 Maintenance and Adjustment

5-1 Maintenance

5-1-1 Cleaning the Printer Head

Paper dust on the heating elements may lower the print quality. In this case, clean the print head as follows:
After printing, the printer head can be very hot.
Be careful not to touch it.
Also let it cool before you clean it.
Do not damage the printer head by touching it with your fingers or any hard object.

1. Turn the POS System power switch off.
2. Open the Printer Cover.
3. Open the cover of paper supplier with pushing the ORANGE CAP LEVER.
4. Clean the Printer Head Thermal Element with a cotton swab moistened with alcohol solvent. (ethanol, methanol or IPA)
5. After confirming that alcohol solvent has been dried up completely, close the cover of paper supplier until be locked.

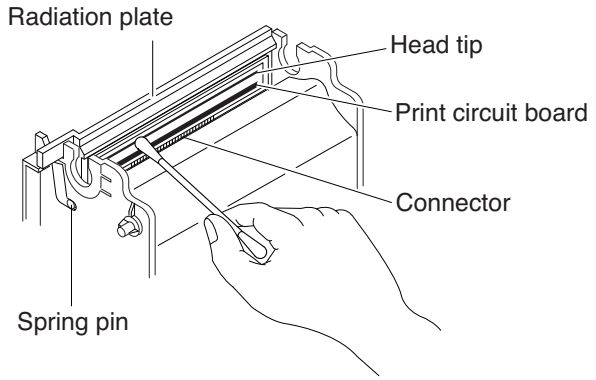

Figure 5-1 Clean the Printer Head (SPS-520 / SPS-530)

Caution: Note that the thermal head(Thermal Element and Radiation Plate) becomes very hot during normal operation. To prevent the danger of burn injury from thermal, be sure to wait for about 10 minutes after turning power off before beginning the cleaning.

5-1 Maintenance

5-1-2 Removing Paper Jam (SPS-520)

When the paper jam occurs, the buzzer will beep. Then open the COVER PRINTER with power ON. If the PRINTER COVER can not be opened, follow the below steps.

1. Turn the ORANGE KNOB clockwise until the buzzer beep stops as illustrated Figure5-2.
2. Push the ORANGE CAP LEVER towards the rear of the PRINTER and lift up to open the PRINTER COVER.
3. Remove the jammed paper at the PRINTER.

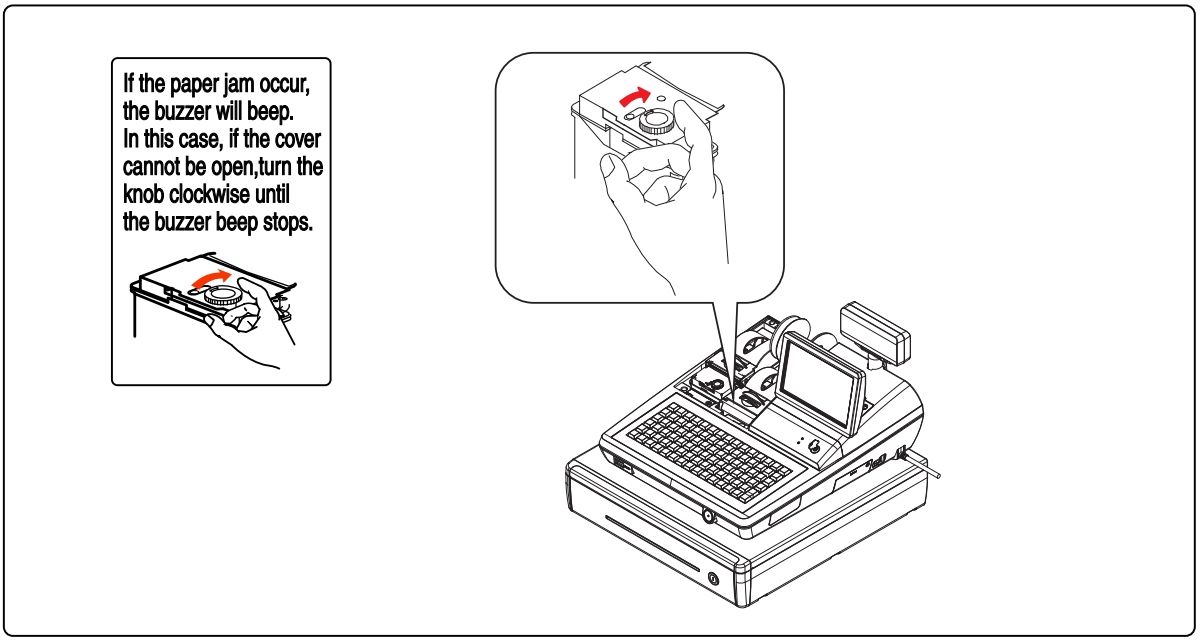

Figure 5-2 Removing Paper Jam (SPS-520)

5-1 Maintenance

5-1-2 Removing Paper Jam (SPS-530)

When the paper jam occurs, buzzer will beep and error message will be shown on the display. In this case, open the COVER PRINTER with power ON. If the PRINTER COVER will not open, follow the below steps.

1. Lift it off COVER. (Figure 5-3-①)
2. Turn the KNOB(Orange color) forward or backward until the buzzer beep stops as illustrated Figure5-3-②.
3. Remove the jammed paper from the PRINTER.

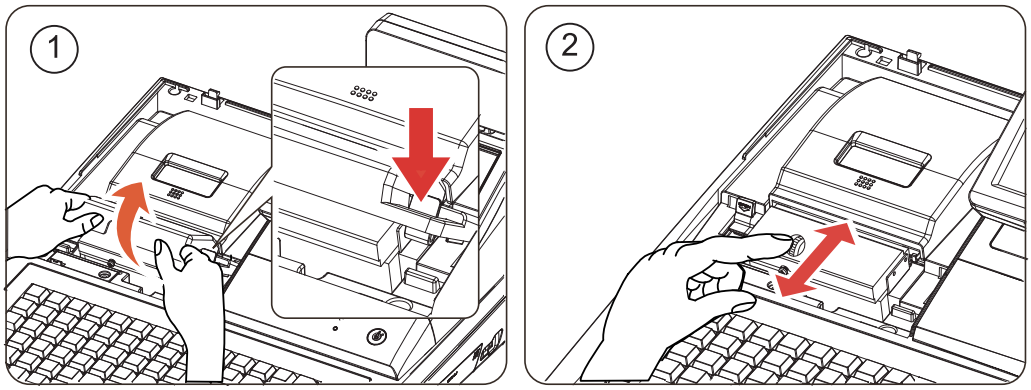

Figure 5-3 Removing Paper Jam (SPS-530)

MEMO

6 Troubleshooting

6-1 System power-up sequence

The following lists the chain of events that occur when you turn on the POS. You can follow this list as one means of determining if the POS is operating correctly.

When the power switch is turned on, these events occur:

6-1-1 Main B'D power-up sequence

- All devices (CPU, Memory, Controller…etc,) are reset.
- The power (3.3V) LED are light on MAIN B'D.
- The boot program (A29L800UV) is run and the status LED is on.
- The OS & application program is copy from NAND-Flash to SDRAM (64Mb).
  It takes about 30 sec and the status LED is off.
- Now, Application program is run on SDRAM and TFT-LCD is displayed.

6-1-2 IO B'D power-up sequence

- All devices (micom, Memory…etc,) are reset.
- The power (5V,3.3V) LEDs are light on IO B'D.
- And than, IO B'D is waiting for communication with main B'D.

6-1-3 LCD B'D power-up sequence

- The micom (ATMEGA8) is reset.
- The power(5V) LED are light on LCD B'D
- The Rear 2Line LCD are displayed
- And than, LED B'D is waiting for communication with main B'D.

6-2 Power problem

6-2-1 Verifying the power supply

- Checking AC power cord.
- Checking the power switch whether it is on or not. It is located the right side of product.
- Checking the fuse (250V, 3.15A) on IO B'D.
- Separate the power harness between SMPS and IO B'D.
  And measure the DC output voltage on SMPS (+24V)
- If it does not go out, please replace the SMPS.
- If it output voltage is ok, check next.

6-2-2 Verifying the IO B'D power line

- Checking the power LEDs on IO B'D, if it is on or not.
- If the power LEDs are off, It must be short between power line and ground. (VDD5V)
  In this case, power off and separate the SMPS, MAIN B'D, LCD B'D and measure the resistance between power line and ground.
- Measure other voltage.(Ex : VDD3.3V, VDD1.8V, Vserial)
- If these voltages above mentioned do not go out, check the appropriate regulator or component.
  And check power line is short or open.

6-2-3 Verifying the MAIN B'D power line

- The main B'D source voltage (VDD5V) is supplied the IO B'D
- Checking the power LEDs on main B'D, if it is on or not.
- If the power LEDs are off, It must be short between power line and ground. (VDD3.3V)
  In this case, power off and measure the resistance between power line and ground.
- Measure other voltage.(Ex : VDD1.3V, VDD2.5V)
- If these voltages above mentioned do not go out, check the appropriate regulator or component.
  And check power line is short or open.

6-2-4 Verifying the LCD B'D power line

- The LCD B'D source voltage (VDD5V) is supplied the IO B'D
- Checking the power LEDs on lcd B'D, if it is on or not.
- If the power LEDs are off, It must be short between power line and ground. (VDD5V)
  In this case, power off and measure the resistance between power line and ground.
- Measure other voltage.(Ex : VLCD3.3V,VDD3.3V, VLVOLT4.2V)
- If these voltages above mentioned do not go out, check the appropriate regulator or component.
  And check power line is short or open.

NOTE :

During servicing & repairing, Be careful against receiving an electric-shock.

6-3 MAIN B'D Problem (System boot & program)

6-3-1 Boot Flash ROM (A29L800UV) problem of Main B'D

- **Related RESET**
  → Check the reset IC (AME8500, U19) & reset time (150 ~ 270ms).
  → Check the reset switch if it does operate correctly.
  → Check the reset signal of 74LCX14 (U17) output.
- **Related System signals (Address, Data, nCE, nOE, nWE)**
  → Check these signals whether it short / open.
- **Related System Clock**
  → Check the crystal, if it operates correctly or not.
  → Clock frequency is 16.9344MHz.
- **Related Booting select DIP switch**
  → For normal mode, DIP switch (SW1) must be all OFF state.
  → Check the related signal whether it short / open.
- **Related boot Flash ROM program (A29L800UV)**
  → If the boot program is erased during servicing, boot error is occurred.
  → Refer to chapter 3 for boot program recovery and download.

6-3-2 Application program (NAND Flash & SDRAM) problem of Main B'D

- **Related System memory (SDRAM)**
  → Check signals for SDRAM (U4,U12) whether it short / open.
- **Related NAND Flash memory**
  → This memory is used for OS & application program storage such as PC HDD.
  → If the program is erased or broken during program upgrade, boot error is occurred.
  → In this case, Perform are-download use to the sd-card or lan
  → For program download or upgrade, refer the chapter 3.

6-4 MAIN B'D Problem (Back-light, LCD, Data Memory, RTC, Battery)

6-4-1 Back-light of TFT-LCD problem

- Check the back-light voltage (VDD5V) on LCD B'D.
- Check harness
  → Harness between MAIN B'D and LCD B'D (20-pin).
  → Harness between LCD B'D and TFT-LCD (FFC cable 40-pin).
- Check the signal (Back-light on/off signal)
  → Check this signal whether it short / open.

6-4-2 TFT-LCD panel problem (No display)

- Check the LCD TTL signals on Main B'D.
  → The MCU(S3C2440A, U31) outputs LCD signal (R,G,B and Sync)
  → Measure these signals and check whether it short/open or not
- Check harness. (1st)
  → Harness between Main B'D and LCD B'D. (20-pin).
  → Harness between Main B'D and LCD B'D..(30-pin).
  → Harness between LCD B'D and TFT-LCD panel.(FFC cable 40-pin).
- Check LCD_VCLK signal and LCD_VDEN. (2st)
  → The signals is converted from Main to LCD panel through IO B'D.
  → Check the signal whether it short/open or not.
- Check FFC cable between LCD B'D and TFT-LCD (LVDS 40-pin).
- Check the voltage VLCD3.3V. This voltage is used for TFT-LCD panel logic.(AME8816 output, U4)

6-4-3 Data memory problem (Back-up broken when power off)

- The System-ECR has 2Mbyte SRAM and power fail sensing circuit for the data back-up. When power off, the MCU (S3C2440) detect a point of time and perform the data back-up.
- Check backup circuit on MAIN B'D
  → Check 74LCX138 (U16) and related component whether short or not.
  → Check battery voltage whether above 1.8V or not.
  → Check battery whether it is separated from battery socket.
  → Check SRAM (U14) component whether short/open or not.
- Check power fail circuit on IO B'D
  → Check KA393 (U7) and related component whether short or not.

6-4-4 RTC problem

- Check backup circuit on MAIN B'D
  → Check the RTC clock, this frequency is 32.768KHz
  → Check battery voltage whether above 1.8V or not.
  → Check battery whether it is separated from battery socket.

6-4-5 Battery problem

- The battery of SPS500 is Lithium Manganese Dioxide Rechargeable Battery (ML2032).
- Never short circuit the battery. It is caused that back-up data is gone.
- Do not use CR2032 battery. The CR2032 is not rechargeable battery.
- Charging problem
  → Check relate component & circuit.
- Battery change
  → Before changing the battery, make sure save the data on SRAM.

6-5 MAIN B'D Problem (LAN, USB, Serial)

6-5-1 LAN

- **Cable NOT attached (Yellow LED of LAN connector does not turn on).**
  → Check LAN cable. Refer to chapter 2 cable connection diagram.
  → For IRC (Inter Register Communication), It has to be used the cross cable.
  → For LAN, It has to be used the direct connection cable.
  → Check LAN RJ-45 modular jack insert right position.
  → There are 5 RJ-45 Connectors. One is for LAN, the others are for serial RS-232 communication.

- **Communication fail occurs (Green LED of LAN connector does not blank).**
  → Check LAN cable whether cable wire is open or not.
  → Check cable length. Based on LAN specification, the cable length has to less than 100M.
  → Check DM9000B chip and related circuit & component whether short or not.

6-5-2 USB

- **USB device NOT attached and Communication fail occurs.**
  → Check USB device whether it is broken or not.
  → Check USB version. This product supports USB 1.1 version.
  → Check related circuit & component whether short or not.
  → Check USB source voltage (+5V) for HID (Ex ; Mouse, Keyboard, Scanner…etc,.)

6-5-3 Serial (COM#1 ~ COM#4)

- **Communication fail occurs**
  → Check communication setting parameter (Speed, Parity, Data Bit…etc,.)
  → Check the interface cable. Refer to Chapter 2 for cable connection.
  → Check the RS232 driving voltage (+12V, -12V).
  → Measure +12V, -12V on main B'D. If -12V voltage level is less than -7.0V, it is OK.
  → Check controller chip and related circuit. (COM#1/#2→SC32440A, COM#3/#4→TL16C752B)
  → Perform the loop-back test at self test mode. Refer to Chapter3 for loop-back connection.

- **Source voltage for Scanner & Rear VFD does not come out**
  → The source voltage (+5V) for scanner comes out at COM#1,#2,#3,#4..
  → Check the power consumption of scanner. This product limits the power current;
  → Scanner is less than 300[mA]. (Recommend)
  → Check related circuit & component whether open or not.

6-5-4 SDCARD

- **Operation Fail**
  → Performs the SDCARD test at H/W test mode.
  → Check the harness between SD B'D and MAIN B'D, if it is connected or not.
  → Check the 10-Pin harness, it is OK or not.
  → Check related circuit & component whether short or not.

6-6 LCD B'D Problem (Boot, LCD Panel, Touch Panel, Rear LCD, LED)

6-6-1 LCD B'D Boot problem

- **Related RESET**
  → Check the harness between Dallas-Key and IO B'D, if it is connected or not.
  → Check the reset signal of 74HC08 (U1) output.
- **Related Program**
  → The micom(ATMEGA8, U5) has the internal flash to store the program.
  → Check the program is broken or erased.
- **Related System Clock**
  → Check the crystal, if it operates correctly or not.
  → Clock frequency is 14.7456MHz.

6-6-2 LCD Panel problem

- **Operation Fail**
  → Performs the LCD panel test at H/W test mode.
  → Check the power voltage (VDD3.3V) on LCD B'D.
  → Check the FFC harness between LCD panel to LCD B'D.
  → Check related circuit & component whether short or not.
  → Check the micom on LCD B'D whether it works normally or dead.
  → Check the harness between LCD B'D and IO B'D, if communication is OK or not.
  → Check the connection. between MAIN B'D and IO B'D, if communication is OK or not.

6-6-3 Touch panel problem

- **Operation Fail**
  → Performs the touch panel test at H/W test mode.
  → Check the FPC harness between touch panel to LCD B'D.
  → Check related circuit & component whether short or not.
  → Check the harness between LCD B'D and IO B'D, if communication is OK or not.
  → Check the connection. between MAIN B'D and IO B'D, if communication is OK or not.

6-6-4 Rear LCD problem

- **Operation Fail**
  → Performs the Rear LCD test at H/W test mode.
  → Check the harness between Rear LCD to LCD B'D.
  → Check related circuit & component whether short or not.

6-6-5 LED B'D problem

- **Operation Fail**
  → Performs the LED test at H/W test mode.
  → Check the harness between LED B'D to LCD B'D.
  → Check related circuit & component whether short or not.

6-7 IO B'D problem (Boot, Thermal Printer, Feed motor, Auto-cutter)

6-7-1 Boot Flash ROM (A29F800UV) problem of IO B'D

- **Related RESET**
  → Check the reset block (74HC14, U24) & reset time (150 ~ 270ms).
- **Related System signals (Address, Data, nCE, nOE, nWE)**
  → Check these signals whether it short / open.
- **Related System Clock**
  → Check the crystal, if it operates correctly or not.
  → Clock frequency is 9.216MHz.
- **Related boot Flash ROM program (A29F800UV)**
  → If the boot program is erased during servicing, boot error is occurred.
  → Refer to chapter 3 for boot program recovery and download.

6-7-2 Thermal Printer problem

- **Print Operation Fail**
  → Check the harness between PRINTER and IO B'D, if it is connected or not.
  → Check the TPH voltage.(+24V),
  → Check the Control Signal on micom (data, clk, latch, strobe)
  → Check the Thermister of printer.
  → Check the ADC port of micom.
  → Check related circuit & component whether short or not.

- **Feed motor Operation Fail**
  → Check the harness between PRINTER and IO B'D, if it is connected or not.
  → Check the Voltage.(+24V),
  → Check the Phase signal.
  → Check the Driver (TEA3718, U19,22) enable signal (SPS-530)
  → Check the Driver (TEA471, Q11,Q12) enable signal (SPS-520)
  → Check the sensor's input.
  → Check related circuit & component whether short or not.

6-7-3 Auto-cutter problem

- **cutting Operation Fail**
  → Check the harness between PRINTER and IO B'D, if it is connected or not.
  → Check the Driver (TEA3718, U24) enable signal.
  → Check the sensor's input.
  → Check related circuit & component whether short or not.

7 Exploded Views and Parts List

7-1 Main Set

7-1-1 Exploded View

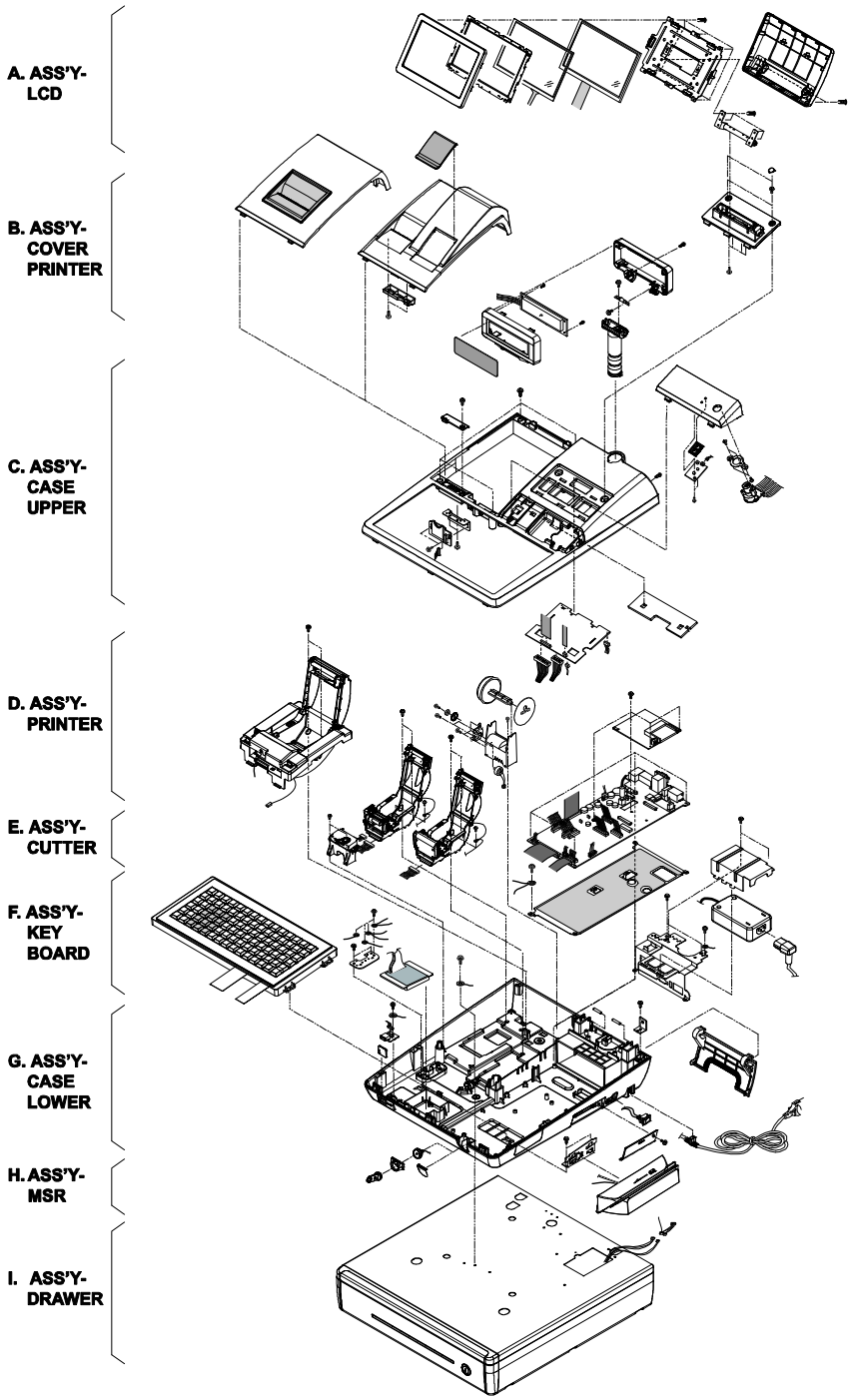

Figure7-1 Total Disassembly (SPS-520 / SPS-530)

7-1 Main Set

7-1-2 A. ASS'Y LCD

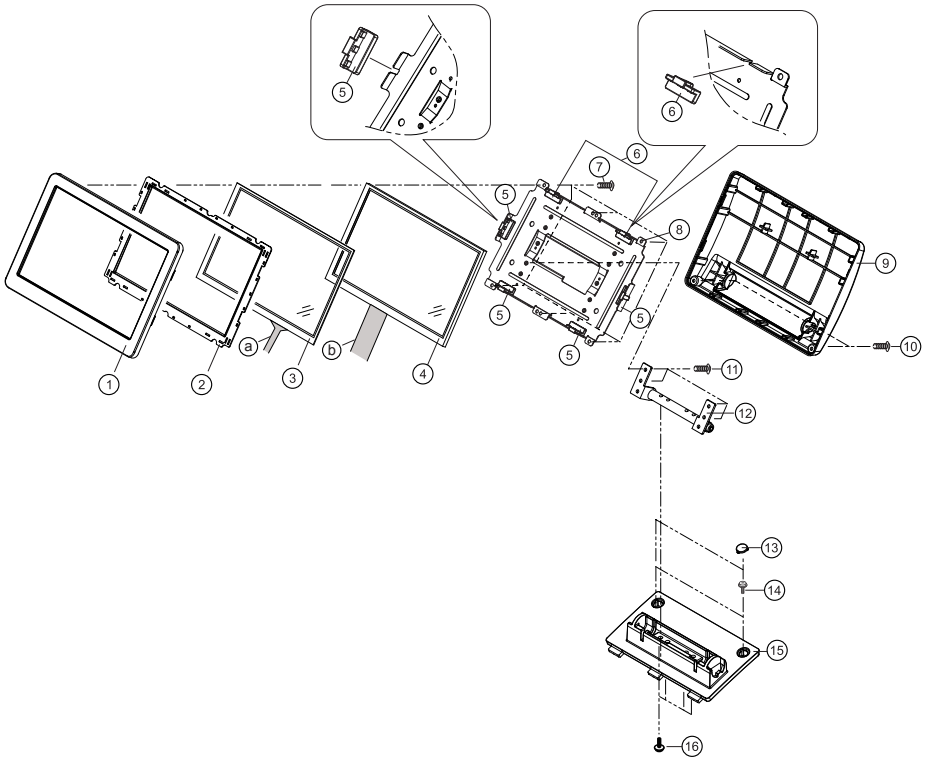

Figure7-2 ASS'Y LCD

7-1-2 A. ASS'Y LCD

No.	Parts No.	Description / Specification	Q`ty	Design-Location	Serviceable	Remark
1	JK72-20324A	PMO-LCD_FRONT,BLACK	1		Y	SAM4S
2	JK70-60038A	RMO-WATER PROOF LCD	1		Y	
3	JK97-20109A	ASSY-TOUCH PANEL;SPS-500	1		Y	
	JK07-30004A	TOUCH PANEL:4 WIRE,7"	1		N	
	JK70-60051A	RMO-RUBBER TAPE LCD(S)	2		N	
	JK70-60051B	RMO-RUBBER TAPE LCD(L)	2		N	
4	JK07-00017B	DISPLAY-LCD;7" TFT,40P,CPT,0.5mm,	1		Y	
5	JK70-60047A	RMO-RUBBER LCD(C)	4		Y	ORANGE
6	JK70-60040A	RMO-RUBBER LCD(L)	2		Y	GRAY
7	6001-000665	SCREW-MACHINE:PWH,+,M3,L4	4		Y	
8	JK70-20124A	IPR-BRKT LCD	1		Y	
9	JK72-20326A	PMO-LCD_REAR,BLACK	1		Y	
10	JK70-50044A	SCREW-TAPTITE;PWH,+,M3,L10,BLACK	2		Y	
11	6001-000665	SCREW-MACHINE:PWH,+,M3,L4	4		Y	
12	JK75-20069A	MEC-HINGE ASS'Y LCD	1		Y	
13	JK70-60044A	RMO-CAP RUBBER,BLK	2		Y	
14	JK70-50044A	SCREW-TAPTITE;PWH,+,M3,L10,BLK	2		Y	
15	JK72-20325A	PMO-LCD_HOLDER,BLACK	1		Y	
16	JK70-50091A	SCREW-MACHINE;PWH,+,M4,L8	4		Y	

7-1 Main Set

7-1-2 B. ASS'Y-COVER PRINTER (SPS-520)

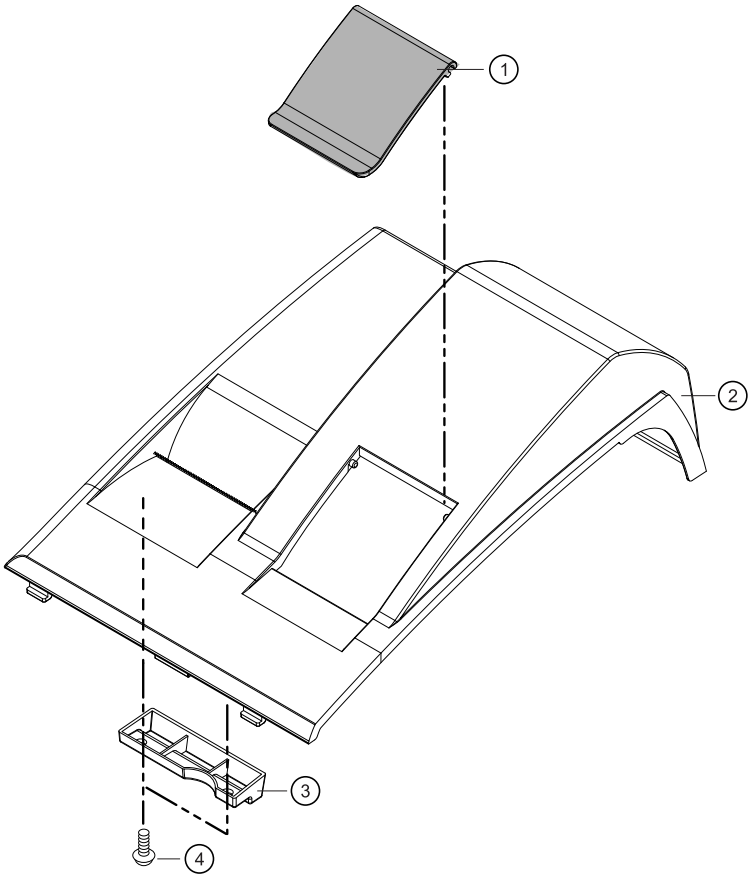

Figure7-3 ASS'Y-COVER PRINTER (SPS-520)

7-1-2 B. ASS'Y-COVER PRINTER(SPS-520)

No.	Parts No.	Description / Specification	Q`ty	Design-Location	Serviceable	Remark
1	JK72-20026A	PMO-WINDOW JOURNAL	1		Y	
2	JK97-20089A	ASSY-COVER PRINTER 2INCH	1		Y	SAM4S
3	JK72-20038B	PMO-GUIDE CUTTER	1		Y	
4	JK70-50096A	SCREW-TAPPING:PWH,+,2,M3,L5,BLACK	2		Y	

7-1 Main Set

7-1-2 B. ASS'Y-COVER PRINTER (SPS-530)

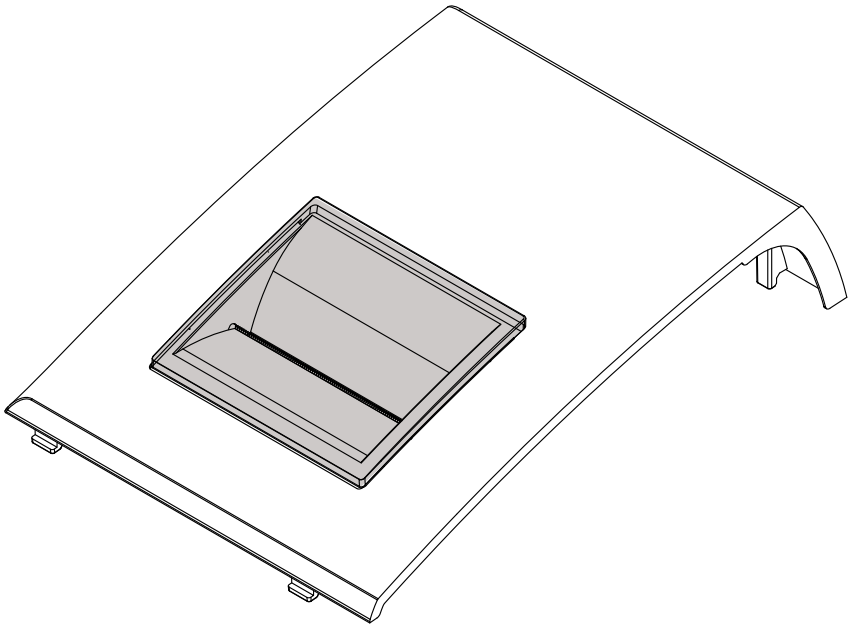

Figure7-4 ASS'Y-COVER PRINTER (SPS-530)

7-1-2 B. ASS'Y-COVER PRINTER(SPS-530)

No.	Parts No.	Description / Specification	Q`ty	Design-Location	Serviceable	Remark
B	JK96-10360A	ELA-COVER PRINTER 3INCH;SPS-500	1		Y	SAM4S
	JK72-20315A	PMO-COVER_PRINTER (3INCH)	1		N	
	JK97-20087A	ASSY-JOURNAL 3INCH	1		N	

7-1 Main Set

7-1-2 C. ASS'Y-CASE UPPER

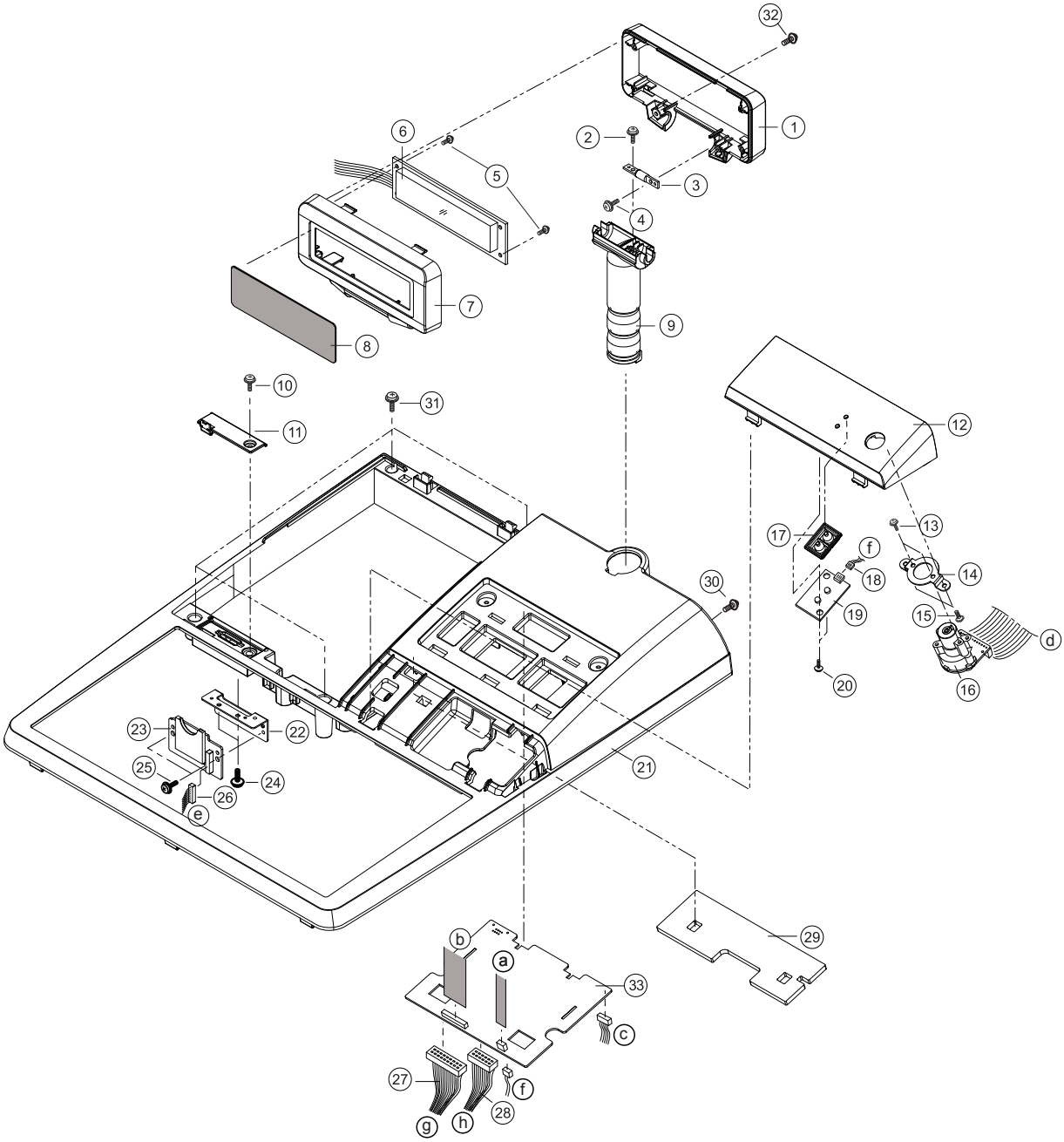

Figure7-5 ASS'Y-CASE UPPER

7-1 Main Set

7-1-2 C. ASS'Y-CASE UPPER

No.	Parts No.	Description / Specification	Q`ty	Design-Location	Serviceable	Remark
1	JK72-20334A	PMO-TURRET_REAR,BLACK	1		Y	
2	6002-000175	SCREW-TAPPING:PWH,+,2,M3,L8	1		Y	
3	JK75-20063B	MEC-HINGE ASS'Y REAR	1		Y	
4	6002-000175	SCREW-TAPPING:PWH,+,2,M3,L8	1		Y	
5	6002-000174	SCREW-TAPPING:PWH,+,2,M3,L10	2		Y	
6	JK07-00007A	DISPLAY-LCD: 2LINE(16*2)	1		Y	
7	JK72-20333A	PMO-TURRET_FRONT,BLACK	1		Y	SAM4S
8	JK72-20340A	PMO-WINDOW LCD	1		Y	
9	JK72-20332A	PMO-TURRET_BODY,BLACK	1		Y	
10	JK70-50062A	SCREW-MACHINE:PWH,+,M3,L14,BLACK	1		Y	
11	JK72-20316A	PMO-COVER_SD,BLACK	1		Y	
12	JK72-20313A	PMO-COVER_MODE:SPS-530,BLACK	1		Y	
	JK72-20313B	PMO-COVER_MODE:SPS-520,BLACK	1		Y	
13	6002-000319	SCREW-TAPPING:PH,+,2,M3,L8	2		Y	
14	JK70-10004A	IPR-BRKT MODE_S/W	1		Y	
15	6002-000319	SCREW-TAPPING:PH,+,2,M3,L8	2		Y	
16	JK96-10044A	MODE KEY ASSY	1		Y	
17	JK72-20125B	PMO-LED	1		Y	
18	JK39-40752A	HARNESS-LED	1		Y	
19	JK92-01614D	PBA SUB:SPS-500,LED B'D	1		Y	
20	6002-000319	SCREW-TAPPING:PH,+,2,M3,L8	2		Y	
21	JK72-20308A	PMO-CASE_UPPER,BLACK	1		Y	
22	JK70-20122A	IPR-BRKT SD	1		Y	
23	JK92-01614B	PBA SUB:SPS-500,SD B'D	1		Y	
24	6002-000174	SCREW-TAPPING:PWH,+,2,M3,L10	2		Y	
25	6001-000665	SCREW-MACHINE:PWH,+,M3,L4	2		Y	
26	JK39-40756A	HARNESS-SD	1		Y	
27	JK39-40750B	HARNESS-LCD,30P	1		Y	
28	JK39-40750A	HARNESS-LCD,20P	1		Y	
29	JK70-60050A	RMO-LCD PROTECT:	1		Y	
30	JK70-50095A	SCREW-MACHINE:FH,+,M4,L10	1		Y	
31	JK70-50086A	SCREW-TAPPING:PH,+,2S,M4,L10	4		Y	
32	JK70-50044A	SCREW-TAPTITE;PWH,+,M3,L10	1		Y	
33	JK92-01613A	PBA LCD:SPS-500	1		Y	

7-1 Main Set

7-1-2 D. ASS'Y-PRINTER (SPS-520)

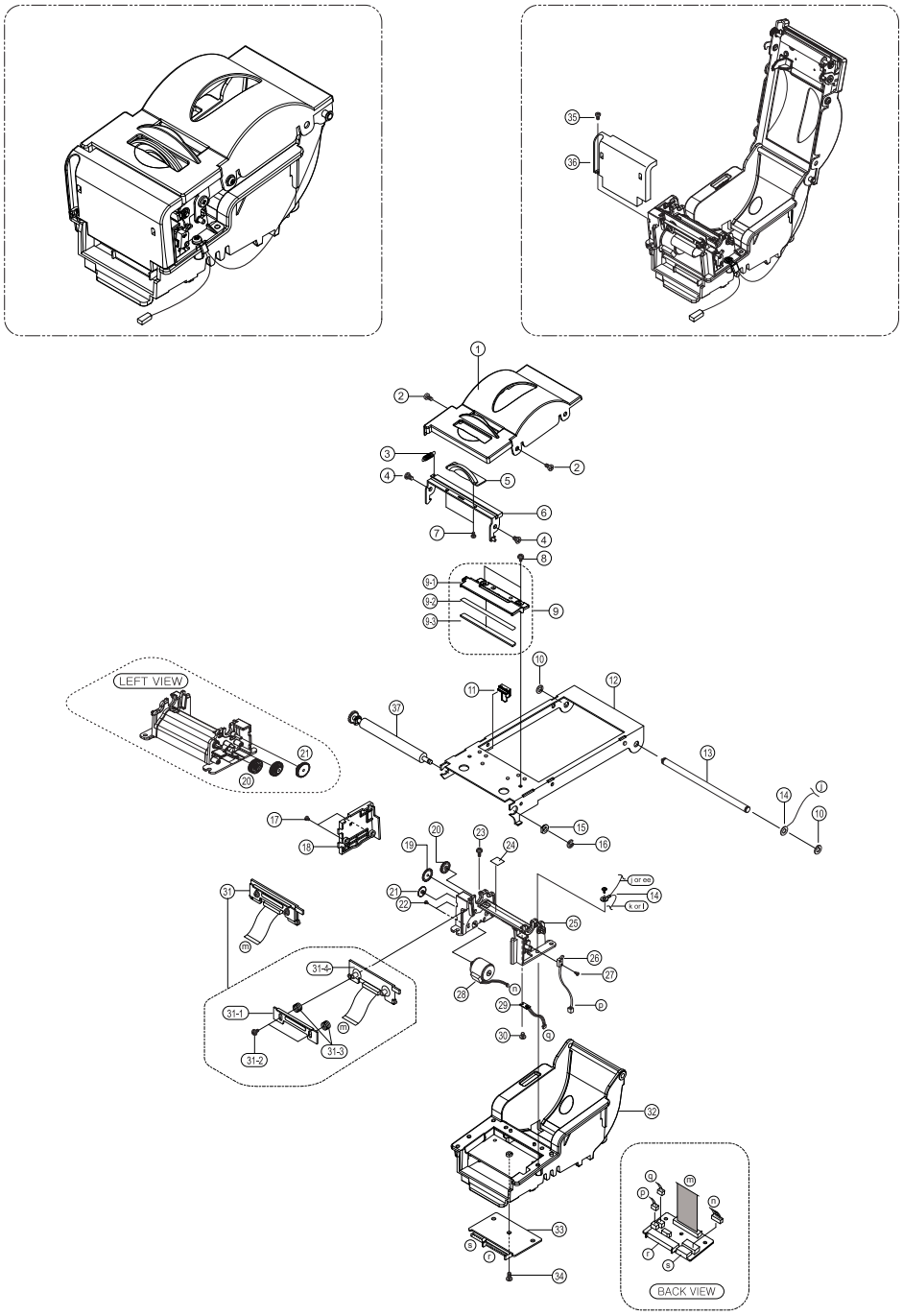

Figure7-6 ASS'Y-PRINTER (SPS-520)

7-1 Main Set

7-1-2 D. ASS'Y-PRINTER(SPS-520)

No.	Parts No.	Description / Specification	Q`ty	Design-Location	Serviceable	Remark
1	JK72-20001B	PMO-COVER TOP,BLK	1		Y	
2	6001-000665	SCREW-MACHINE:PWH,+,M3,L4	2		Y	
3	JK70-30001A	SPRING-HOOK:SWP-B,Φ0.6	1		Y	
4	JK60-00003A	SCREW SPECIAL,STM-210	2		Y	
5	JK72-20003B	PMO-CAP LEVER:STM-210II,ORANGE	1		Y	
6	JK70-20003A	IPR-BRACKET-HOOK	1		Y	
7	JK70-50011A	SCREW-TAPPING:PH,+,M2,L4	2		Y	
8	6001-000665	SCREW-MACHINE:PWH,+,M3,L4	2		Y	
9	JK96-10324B	ELA-FIXED CUTTER ASS'Y	1		Y	With Cutter
10	JK70-50004A	POLY WASHER, IDØ3.1,ODØ6.0,T0.5(RED)	2		Y	
11	JK72-20114A	PMO-PAPER SEPARATOR,BLK	1		Y	
12	JK70-20001A	IPR-COVER HOUSING	1		Y	
13	JK70-70001A	ICT-SHAFT HINGE	1		Y	
14	JK39-40762A	HARNESS-GND:MALE,130mm,GRN	1		Y	
15	JK70-50002B	ICT-BUSHING:STM-210,Fe,Ø3.0	1		Y	
16	JK70-50010A	E-RING:ø2	1		Y	
17	JK70-50009A	SCREW-MACHINE:RH,+,M2,L4	2		Y	
18	JK72-20005A	PMO-SIDE-COVER,BLK	1		Y	
19	JK72-20008A	PMO-GEAR REDUCTION 21_41	1		Y	
20	JK72-20007A	PMO-GEAR REDUCTION 17_39	2		Y	
21	JK72-20006A	PMO-GEAR REDUCTION 13_43	2		Y	
22	JK70-50039A	SCREW-MACHINE;CH,+,M2,L3	2		Y	
23	6002-000147	SCREW-TAPPING:PH,+,2,M3,L10	1		Y	
24	JK68-40002A	LABEL(P)-WARNING HOT	1		Y	
25	JK70-20004B	IPR-MAIN-FRAME:ELLIX10	1		Y	
26	JK96-01233ALF	ELA LEVER SENSOR	1		Y	
27	JK70-50074A	SCREW-MACHINE:RH,+,M1.7,L6,WHITE	1		Y	
28	JK59-40010A	UNIT-MOTOR ASS'Y	1		Y	
29	JK96-01231ALF	ELA P/END SENSOR	1		Y	
30	JK70-50009A	SCREW-MACHINE:RH,+,M2,L4,ZPC(WHITE)	1		Y	
31	JK96-10301A	ASSY-TPH:ELLIX10P,STM-210(H)	1		Y	
31-1	JK70-20005A	IPR-BRACKET-REAR	1		Y	
31-2	6001-000665	SCREW-MACHINE:PWH,+,M3,L4	2		Y	
31-3	JK70-30002A	SPRING-TPH:STM-210,SWP-B,Φ0.7	2		Y	
31-4	JK97-10004C	ASSY-TPH,HEAT SINK:ELLIX10P,STM-210(H)	1		Y	
32	JK72-20330A	PMO-PAPER SUPPLY;STM-210II	1		Y	
33	JK92-01224BLF	PBA SUB-PRT CONN BOARD	1		Y	
34	6002-000175	SCREW-TAPPING:PWH,+,2,M3,L8	1		Y	
35	6002-000147	SCREW TAPPING: PH,+,2,M3,L10,ZPC(YEL)	1		Y	
36	JK72-20009B	PMO-COVER-FRONT,BLK	1		Y	

7-1 Main Set

7-1-2 D. ASS'Y-PRINTER(SPS-530)

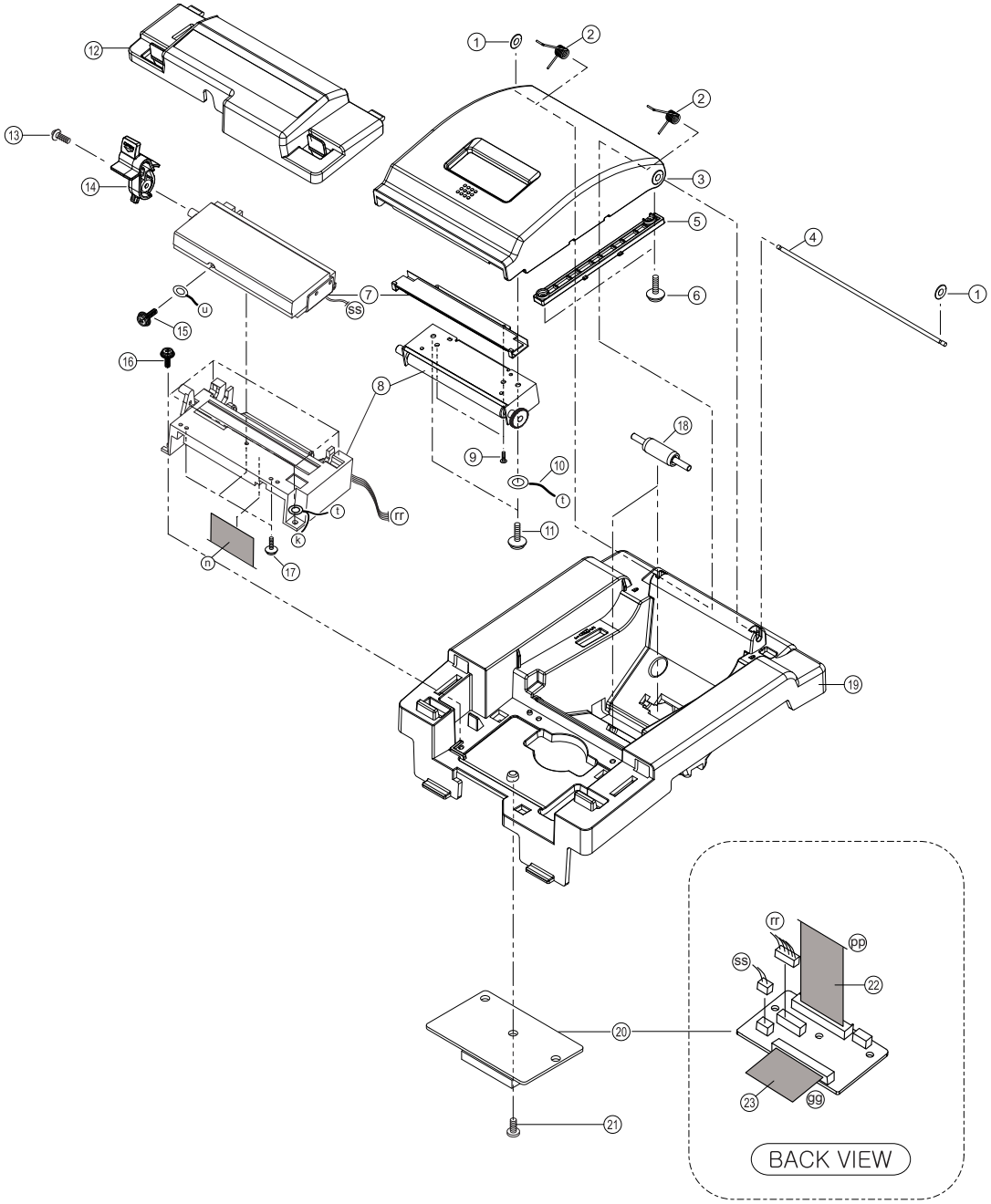

Figure7-7 ASS'Y-PRINTER (SPS-530)

7-1 Main Set

7-1-2 D. ASS'Y-PRINTER(SPS-530)

No.	Parts No.	Description / Specification	Q`ty	Design-Location	Serviceable	Remark
1	JK70-50004A	POLY WASHER, IDØ3.1,ODØ6.0,T0.5(RED)	2		Y	
2	JK70-30018A	SPRING-CLAM	2		Y	
3	JK72-20322A	PMO-HOUSING_CLAM,BLACK	1		Y	
4	JK70-70028A	ICT-SHAFT PLATEN	1		Y	
5	JK72-20335A	PMO-COVER GROUND,BLACK	1		Y	
6	JK70-50087A	SCREW-TAPPING;PWH,+,M2.6,L6,BLACK	2		Y	
7	JK59-20012A	UNIT-CUTTER:ACUF324G-E(SII)	1		Y	
8	JK59-20011A	UNIT-PRINTER:LTPF347E-C576-E(SII)	1		Y	
9	JK70-50009A	SCREW-MACHINE:RH,+,M2,L4	2		Y	
10	JK39-40761A	HARNESS-GND:3"PRT,MALE,310/110,GRN	1		Y	
11	6002-000174	SCREW-TAPPING:PWH,+,2,M3,L10	2		Y	
12	JK72-20312A	PMO-COVER_MECHA:HIPS(HB),BLACK	1		Y	
13	JK70-50087A	SCREW-TAPPING;PWH,+,M2.6,L6	1		Y	
14	JK72-20327A	PMO-LEVER LOCK:HIPS(HB),ORANGE	1		Y	
15	6001-000485	SCREW-MACHINE:PH,+,M2.6,L4	1		Y	
16	JK70-50044A	SCREW-TAPTITE;PWH,+,M3,L10,BLK	4		Y	
17	6001-000665	SCREW-MACHINE:PWH,+,M3,L4	3		Y	
18	JK72-40330A	PMO-ROLLER PAPER/END	2		Y	
19	JK72-20331A	PMO-PAPER SUPPLY (3 INCH)	1		Y	
20	JK92-01617A	PBA SUB:SPS-530,JOINT B'D	1		Y	
21	6002-000175	SCREW-TAPPING:PWH,+,2,M3,L8	1		Y	
22	JK39-50004A	CABLE-FFC:28P,1.25mm,80mm,TPH CABLE	1		Y	
23	JK39-40564A	CBF SIGNAL-PRINTER FFC:SMP-2000,27P,250M	1		Y	

7-1 Main Set

7-1-2 E. ASS'Y-CUTTER(SAC-70)

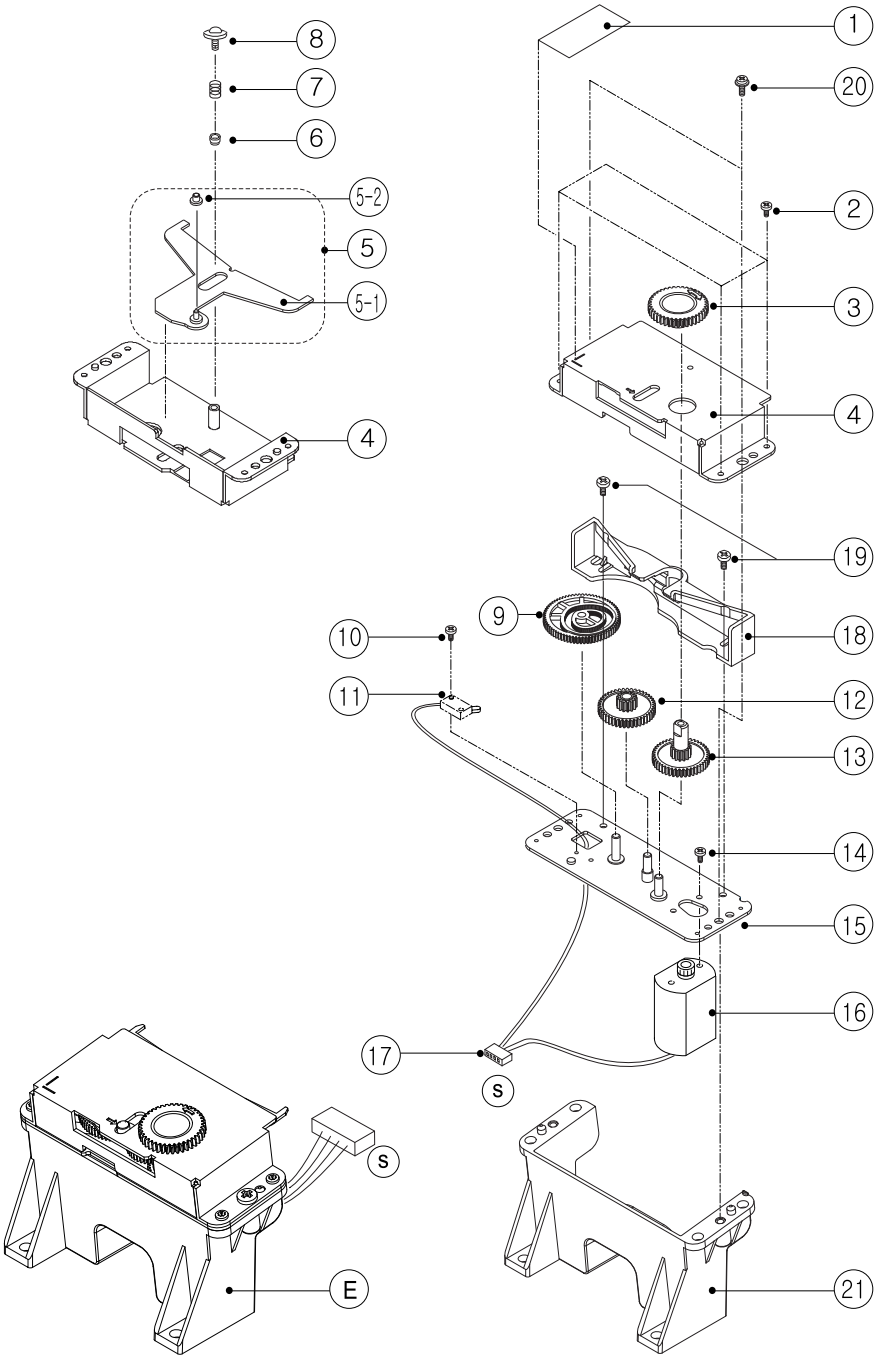

Figure7-8 ASS'Y-CUTTER (SAC-70)

7-1 Main Set

7-1-2 E. ASS'Y-CUTTER(SAC-70)

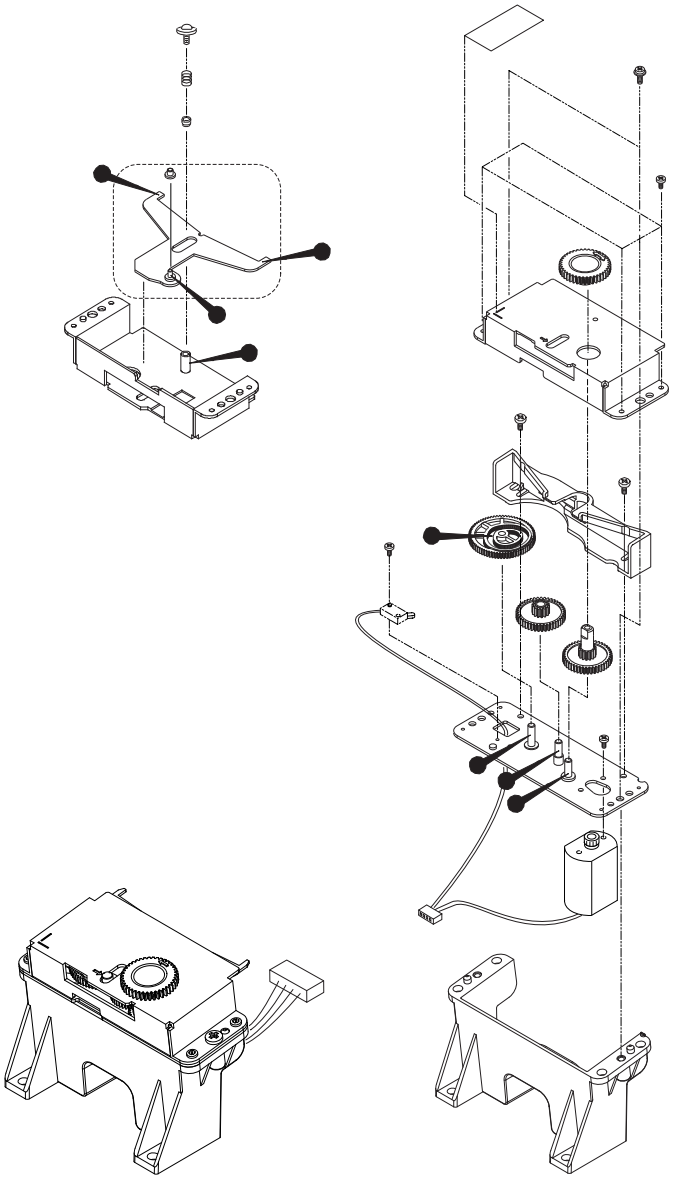

Figure7-9 Lubrication Points of the Auto-Cutter (SAC-70)

Code No.	Description / Specification	Q`ty	Serviceable	Remark
0201-002006	GREASE:KANTOKASEI,KG-397M	-	Y	Minimum Serviceable Packing Weight : 40g

7-1 Main Set

7-1-2 E. ASS'Y-CUTTER(SAC-70)

No.	Parts No.	Description / Specification	Q`ty	Design-Location	Serviceable	Remark
E	JK96-10189A	UNIT CUTTER	1		Y	
1	JK68-40003A	LABEL(P)-WARNING CUTTER	1		Y	
2	JK70-50030A	SCREW-MACHINE:RH,+,M2,L3	4		Y	
3	JK72-20029B	PMO-KNOB CUTTER,ORANGE	1		Y	
4	JK70-20008A	IPR-COVER CUTTER	1		Y	
5	JK96-10340A	ELA-MOVABLE BLADE ASS'Y	1		N	
5-1	JK70-20009B	IPR-MOVABLE BLADE	1		Y	
5-2	JK70-70024A	ICT-BUSHING CAM	1		Y	
6	JK70-50003A	ICT-BUSHING CUTTER	1		Y	
7	JK70-30003A	SPRING-CUTTER	1		Y	
8	JK70-50013A	SCREW-MACHINE*PWH,+,M2.6,L5.5	1		Y	
9	JK72-20033A	PMO-GEAR CAM,NATURAL	1		Y	
10	JK70-50074A	SCREW-MACHINE:RH,+,M1.7,L6	1		Y	
11	3405-001019	SWITCH-MICRO	1		Y	
12	JK72-20032A	PMO-GEAR REDUCTION	1		Y	
13	JK72-20031A	PMO-GEAR KNOB	1		Y	
14	JK70-50030A	SCREW-MACHINE:RH,+,M2,L3	2		Y	
15	JK97-20001A	BOTTOM CUTTER ASS'Y	1		Y	
16	JK97-10011B	ASSY-MOTOR DC	1		Y	
17	JK39-40558A	CBF HARNESS-AUTO CUTTER	1		Y	
18	JK72-20218A	PMO-COVER DUST	1		Y	
19	JK70-50030A	SCREW-MACHINE:RH,+,M2,L3	2		Y	
20	6003-000198	SCREW-TAPPING:PWH,+,2,M3,L12	2		Y	
21	JK72-20320A	PMO-HOLDER_CUTTER	1		Y	

7-1 Main Set

7-1-2 F. ASS'Y-KEYBOARD (90KEY)

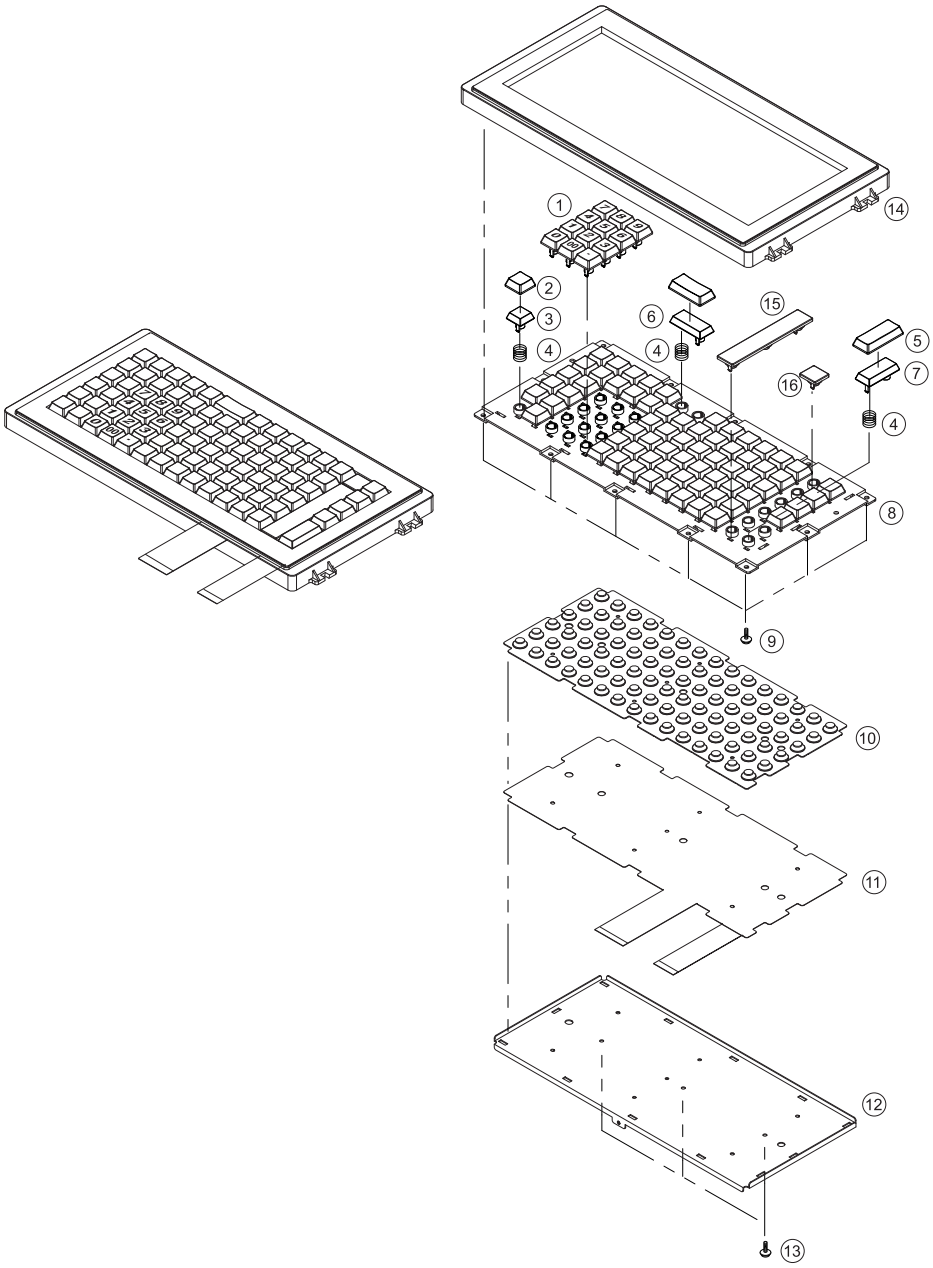

Figure7-10 ASS'Y KEYBAORD (90 Key)

7-1 Main Set

7-1-2 F. ASS'Y-KEYBOARD (90KEY)

No.	Parts No.	Description / Specification	Q`ty	Design-Location	Serviceable	Remark
F	JK75-20061RB	MEC-UNIT KEYBOARD:SPS-500(STD),BLACK	1		Y	
1	JK81-20065A	AS-KEY NUMBER SET:BLACK	1		Y	
2	JK81-20057H	KEY CAP_1X1	66		Y	
3	JK81-20057G	KEY TOP_1X1:BLACK	66		Y	
4	JK81-20061A	RETURN-SPRING	3		Y	
5	JK81-20057C	KEY CAP_2X1	3		Y	
6	JK81-20057E	KEY TOP_1X2:BLACK	2		Y	
7	JK81-20057B	KEY TOP_2X1:BLACK	1		Y	
8	JK81-20054A	PMO-KBD FRAME_90,RAISED	1		Y	
9	6002-000175	SCREW-TAPPING:PWH,+,2,M3,L8	12		Y	
10	JK81-20054D	CONTACT-RUBBER_90,RAISED	1		Y	
11	JK81-20054C	ASSY-FPC,90KEY,RAISED	1		Y	
12	JK81-20054B	IPR-BOTTOM PLATE_90,RAISED	1		Y	
13	6002-000175	SCREW-TAPPING:PWH,+,2,M3,L8	3		Y	
14	JK72-20263AB	PMO-KBD HOUSING(90):BLACK	1		Y	
15	JK72-20239AB	PMO-BLANK KEY_5X1:BLACK	1		Y	
16	JK72-20238AB	PMO-BLANK KEY_1X1:BLACK	1		Y	

7-1 Main Set

7-1-2 F. ASS'Y-KEYBOARD (160KEY)

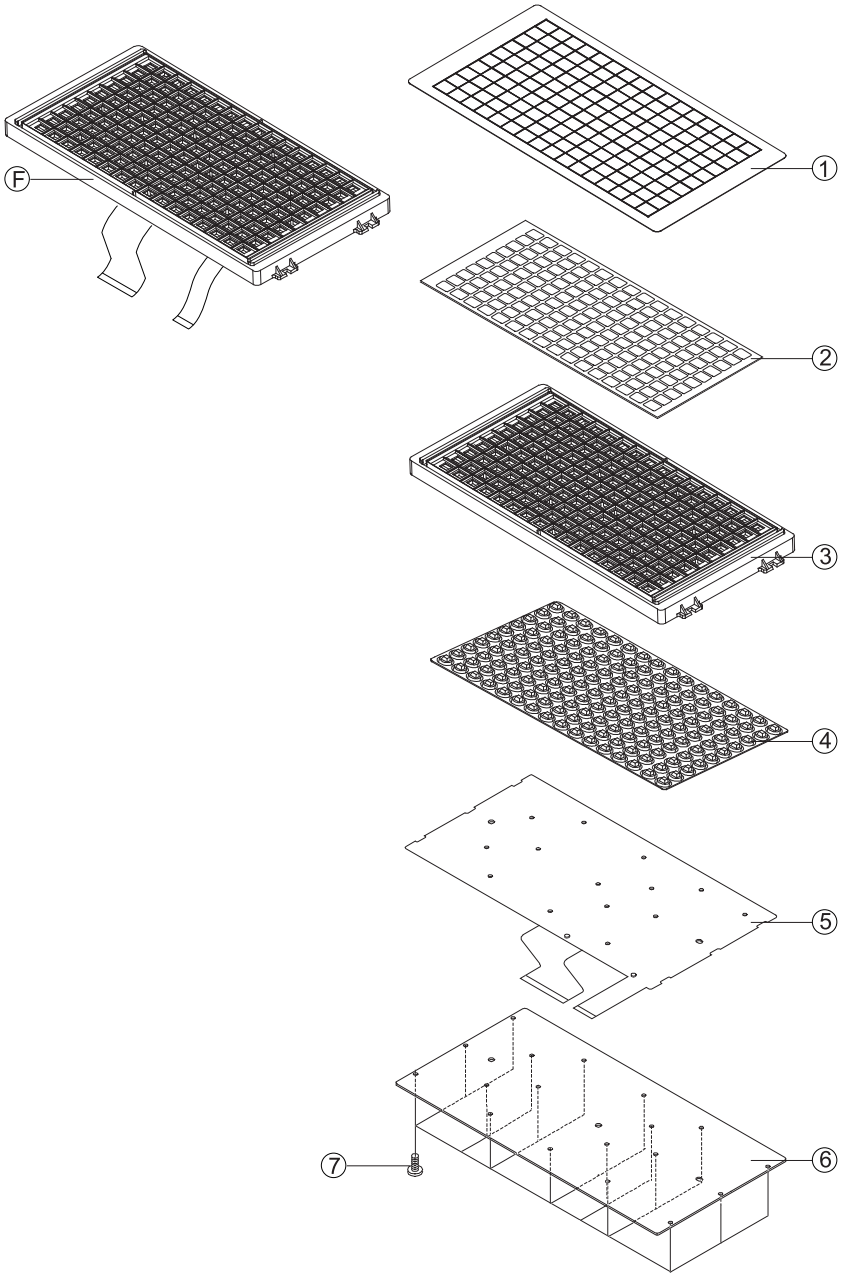

Figure7-11 ASS'Y KEYBAORD (160 Key)

7-1 Main Set

7-1-2 F. ASS'Y-KEYBOARD (160KEY)

No.	Parts No.	Description / Specification	Q`ty	Design-Location	Serviceable	Remark
F	JK59-30016AB	UNIT-KEYBOARD:SPS-500(STD),R-FLAT	1		Y	
1	JK73-20218A	RMO-WATER PROOF	1		Y	
2	JK68-40012U	LABEL(P)-KBD SHEET: SER-7000(CRS)	1		Y	
3	JK81-20018AB	PMO-KBD FRAME;160KEY,FLAT,BLACK	1		Y	
4	JK81-20019A	CONTACT RUBBER:160KEY,FLAT	1		Y	
5	JK81-20072A	ASSY-FPC,160KEY,FLAT	1		Y	
6	JK81-20022A	IPR-BOTTOM PLATE:160KEY,FLAT	1		Y	
7	JK81-20058A	AS-SCREW-TAPPING(BH)2.6X6	19		Y	

7-1 Main Set

7-1-2 G. ASS'Y-CASE LOWER

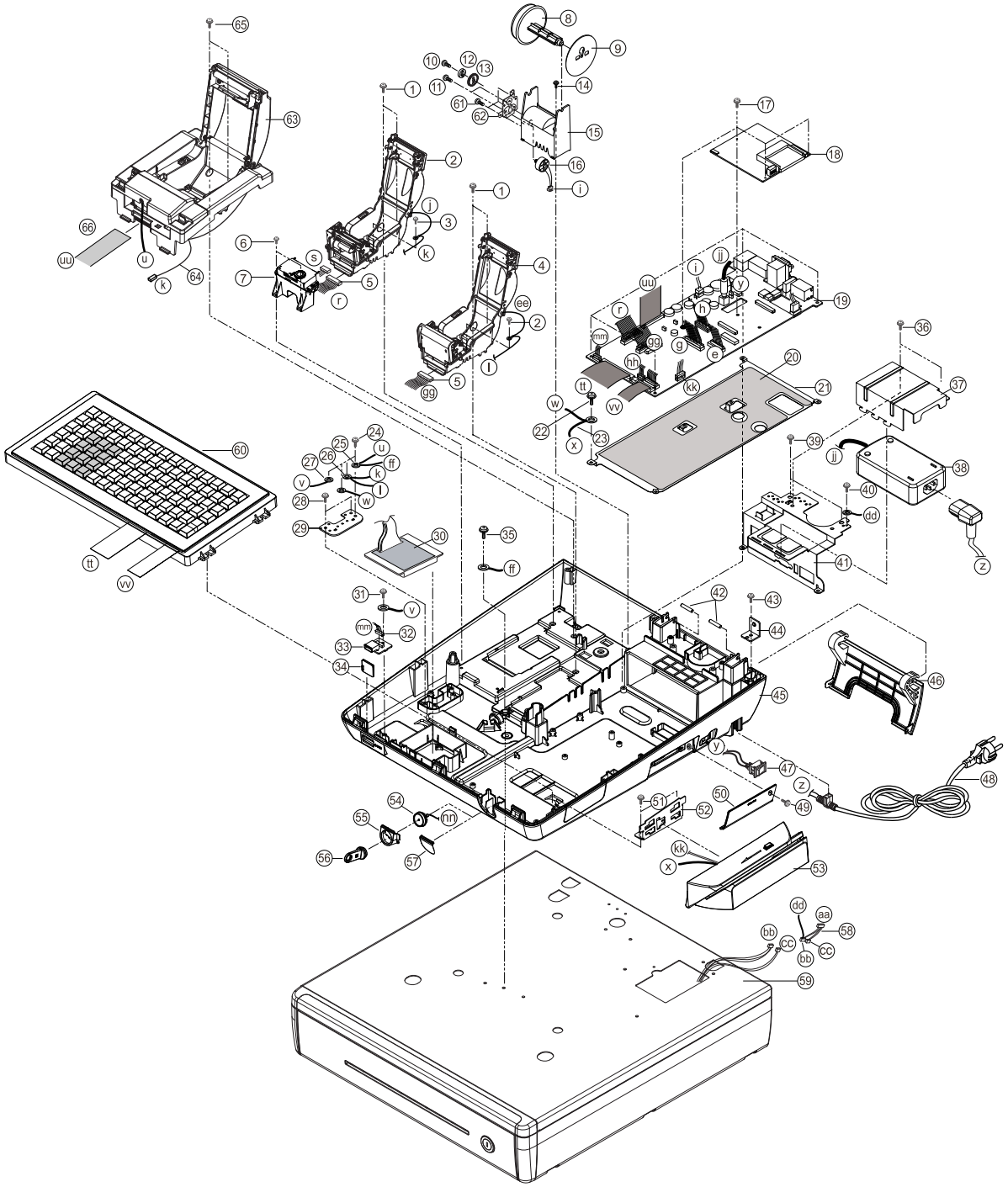

Figure7-12 ASS'Y-CASE LOWER

7-1 Main Set

7-1-2 G. ASS'Y-CASE LOWER

No.	Parts No.	Description / Specification	Q`ty	Design-Location	Serviceable	Remark
1	6003-000198	SCREW-TAPPING:PWH,+,2,M3,L12	2		Y	SPS-520
2	JK96-10188B	ELA-UNIT PRINTER:STM-210II,A/C	1		Y	
3	6002-000174	SCREW-TAPPING:PWH,+,2,M3,L10	1		Y	
4	JK96-10188A	ELA-UNIT PRINTER:STM-210II	1		Y	
5	JK39-00012B	CBF-HARN-PRT	2		Y	
6	6003-000198	SCREW-TAPPING:PWH,+,2,M3,L12	2		Y	
7	JK96-10189A	MEA-UNIT CUTTER:SAC-70	1		Y	
8	JK72-20015A	PMO-SPOOL WINDING:ABS,HB,BLACK	1		Y	
9	JK72-20016A	PMO-GUIDE WINDING:ABS,HB,BLACK	1		Y	
10	6001-000665	SCREW-MACHINE:PWH,+,M3,L4	1		Y	
11	JK70-50014A	SCREW-MACHINE:BH,+,M2.6,L3	2		Y	
12	JK70-60002A	RMO-RUBBER SPOOL,BALCK	1		Y	
13	JK72-20017B	PMO-GEAR SPOOL	1		Y	
14	6002-000171	SCREW-TAPPING:PH,+,2S,M4,L10	1		Y	
15	JK72-20014B	PMO-HOLDER SPOOL,BLACK	1		Y	
16	JK97-10015B	ASSY-MOTOR SPOOL	1		Y	
17	6002-000174	SCREW-TAPPING:PWH,+,2,M3,L10	8		Y	
18	JK92-01610B	PBA MAIN:SPS-500,2MBYTE	1		Y	
19	JK92-01615A	PBA I/O:SPS-500	1		Y	
20	JK68-40119A	LABEL-PLATE SHIELD	1		Y	
21	JK70-20127A	IPR-PLATE SHIELD	1		Y	
22	6002-000174	SCREW-TAPPING:PWH,+,2,M3,L10	1		Y	
23	JK39-40759A	HARNESS-GND	1		Y	
24	JK60-00001A	SCREW-ASSY TAPTITE	4		Y	
25	JK39-40763A	HARNESS-GND	1		Y	
26	JK39-40760A	HARNESS-GND	1		Y	
27	JK39-40764A	HARNESS-GND	1		Y	
28	6002-000174	SCREW-TAPPING:PWH,+,2,M3,L10	2		Y	
29	JK70-10417A	IPR-GROUND PLATE	1		Y	
30	JK92-01284C	PBA SUB-FISCAL:1MBIT,34P	1		Y	FISCAL
	JK92-01284D	PBA SUB-FISCAL:2MBIT,34P	1		Y	FISCAL
31	6002-000174	SCREW-TAPPING:PWH,+,2,M3,L10	1		Y	
32	JK39-40755A	HARNESS-USB	1		Y	
33	JK92-01614E	PBA SUB:SPS-500,USB B'D	1		Y	
34	JK72-20317A	PMO-COVER_USB:HIPS(HB),BLACK	1		Y	
35	6003-001149	SCREW-TAPTITE:PWH,+,S,M4,L10	1		Y	
36	JK70-50056A	SCREW-TAPPING:PWH+ B 4*10	2		Y	
37	JK70-20123A	IPR-BRKT SMPS:SECC T1.0	1		Y	
38	JK44-40008A	POWER-SMPS	1		Y	
39	6002-000174	SCREW-TAPPING:PWH,+,2,M3,L10	2		Y	
40	JK60-00001A	SCREW-ASSY TAPTITE	1		Y	
41	JK70-20121A	IPR-BRKT INTERFACE	1		Y	
42	JK70-70047A	ICT-SHAFT DOOR	2		Y	
43	6002-000171	SCREW-TAPPING:PH,+,2S,M4,L10	1		Y	
44	JK70-10002A	IPR-BRKT CASING	1		Y	
45	JK72-20307A	PMO-CASE LOWER	1		Y	
46	JK72-20318A	PMO-DOOR_INTERFACE	1		Y	
47	JK39-40688A	HARNESS-POWER S/W	1		Y	
48	JK39-20006B	POWER CORD:USA	1		Y	
49	JK70-50052A	SCREW-DELTA PT	1		Y	

7-1 Main Set

7-1-2 G. ASS'Y-CASE LOWER

No.	Parts No.	Description / Specification	Q`ty	Design-Location	Serviceable	Remark
50	JK72-20319A	PMO-DOOR OPTION	1		Y	
51	6002-000174	SCREW-TAPPING:PWH,+,2,M3,L10	2		Y	
52	JK70-20125A	IPR-BRKT MSR	1		Y	
53	JK96-10354B	ELA-MSR;TRACK 1/2	1		Y	
54	JK96-10155C	ELA UNIT-iBUTTON PROBE	1		Y	WITH DALLAS
55	JK72-20310A	PMO-COVER_DALLAS	1		Y	
56	JK96-20090A	ELA UNIT-HOLDER DALLAS	1		Y	
57	JK72-20311A	PMO-COVER_DUMMY	1		Y	W/O DALLAS
58	JK39-40754A	HARNESS-DRAWER	1		Y	
59	JK75-20083BN	MEC-DRAWER G85YPB-24M(CRS) :5B8C	1		Y	
60	JK96-10047D	ELA HOU-KEYBOARD;BLK	1		Y	FLAT
61	JK70-50014A	SCREW-MACHINE:BH,+,M2.6,L3	2		Y	SPS-520
62	JK75-20002A	MEC-BRKT SPOOL	1		Y	
63	JK96-10361A	ELA-UNIT PRINTER	1		Y	SPS-530
64	JK39-40761A	HARNESS-GND	1		Y	
65	6003-000198	SCREW-TAPPING:PWH,+,2,M3,L12	2		Y	
66	JK39-40564A	CBF SIGNAL-PRINTER	1		Y	

7-1 Main Set

7-1-2 H. ASS'Y-MSR

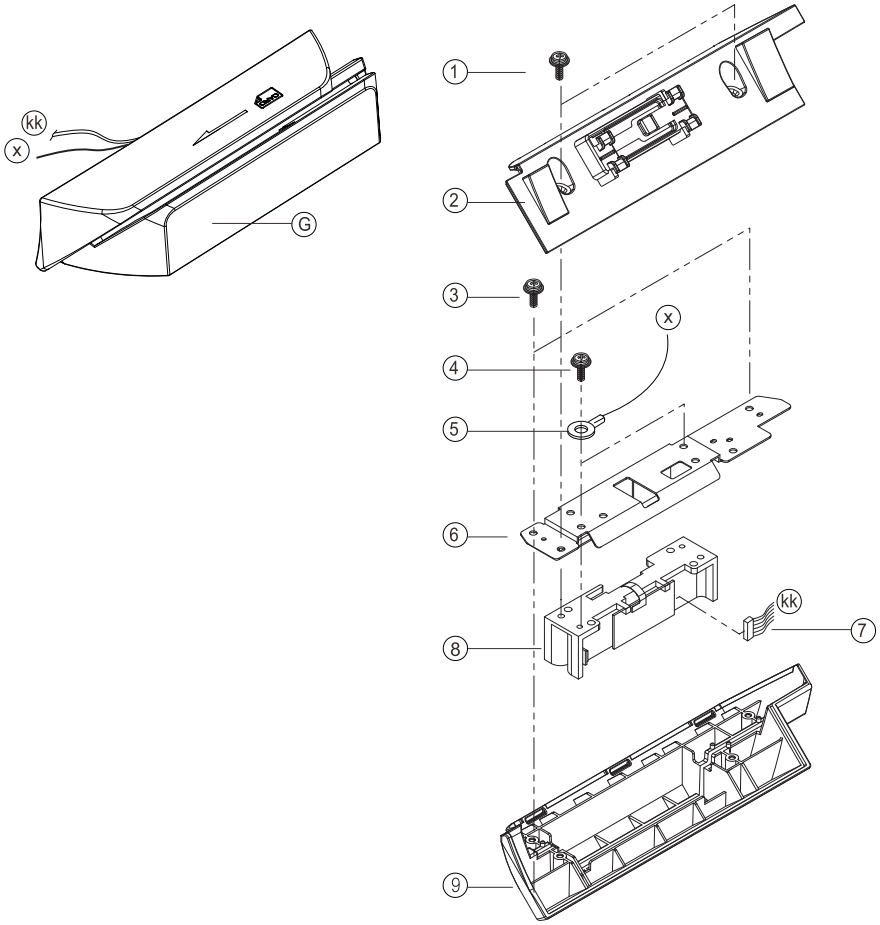

Figure7-13 ASS'Y MSR

7-1-2 H. ASS'Y-MSR

No.	Parts No.	Description / Specification	Q`ty	Design-Location	Serviceable	Remark
1	JK70-50044A	SCREW-TAPTITE;PWH,+,M3,L10	2		Y	
2	JK72-20328A	PMO-MSR_LOWER	1		Y	
3	6002-000174	SCREW-TAPPING:PWH,+,2,M3,L10	2		Y	
4	6001-000665	SCREW-MACHINE:PWH,+,M3,L4	2		Y	
5	JK39-40758A	HARNESS-GND	1		Y	
6	JK70-20126A	IPR-HOLDER MSR	1		Y	
7	JK39-40757A	HARNESS-MSR:8P				
8	JK48-00004B	MSR:MSR-1250-SH-4B,TRACK1-2	1		Y	
	JK48-00003B	MSR:MSR-1260-SH-3B,TRACK2-3	1		Y	
9	JK72-20329A	PMO-MSR UPPER	1		Y	

7-2 DRAWER

7-2-1. I. ASS'Y-DRAWER (Aplus DRAWER)

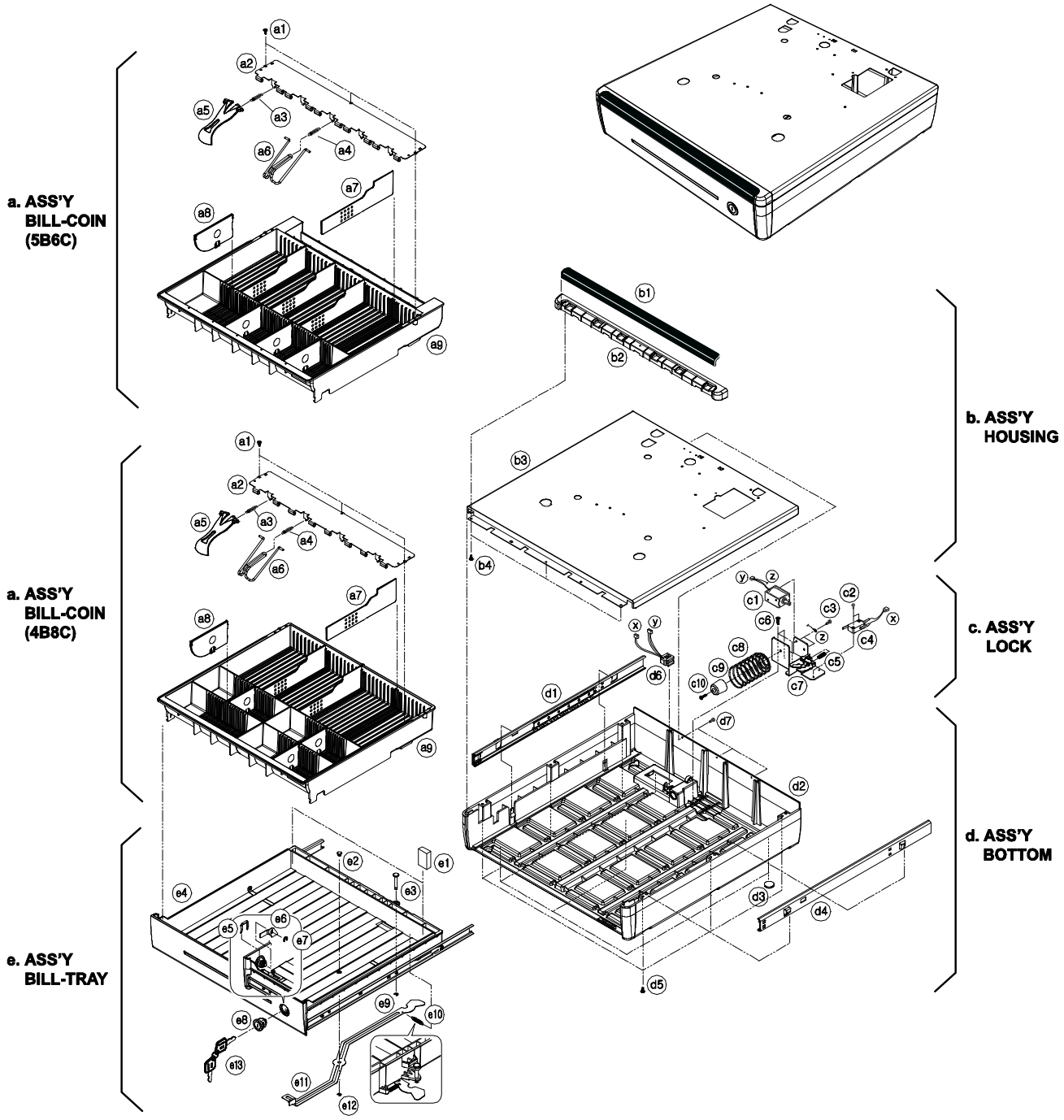

Figure7-14 ASS'Y Drawer (Aplus)

7-2 DRAWER

7-2-1. I. ASS'Y-DRAWER (Aplus DRAWER)

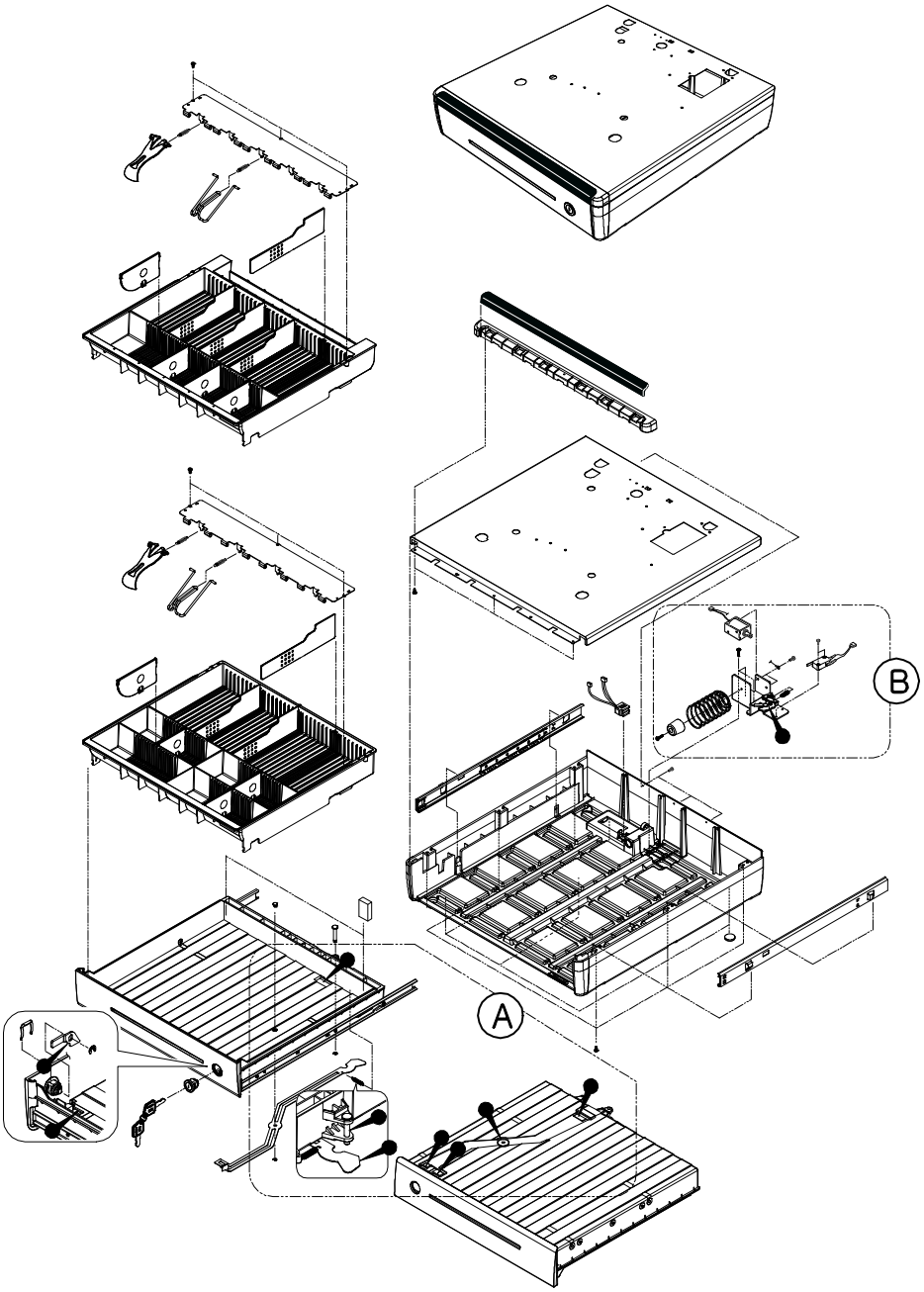

Figure 7-15. Lubrication Points of the Aplus Drawer

No.	Code No.	Description / Specification	Q`ty	Serviceable	Remark
A	0201-002010	GREASE-N2	-	Y	Minimum Serviceable Packing Weight : 40g
B	0201-002009	GREASE-N1	-	Y	Minimum Serviceable Packing Weight : 40g

7-2 DRAWER

7-2-1. I. ASS'Y-DRAWER(Aplus DRAWER)

a. ASS'Y BILL-COIN (5B5C)

No.	Code No.	Description / Specification	Q`ty	Design-Location	Serviceable	Remark
a	JK97-20069A	MEA-UNIT BILL COIN : PLASTIC	1		Y	
	JK97-20069B	MEA-UNIT BILL COIN : STEEL	1		Y	OPTION
a1	JK70-50070A	SCREW-TAPTITE : BLACK	3		Y	
a2	JK70-20069A	IPR-PLATE HOLDER(5B6C)	1		Y	
a3	JK70-30014A	SPRING-LEVER PRESS(MD)	5		Y	
a4	JK70-30015A	SPRING-LEVER PRESS(PD)	5		Y	OPTION
a5	JK72-20259A	PMO-LEVER PRESS(PLASTIC)	5		Y	
a6	JK70-20067A	IPR-LEVER PRESS(STEEL)	5		Y	OPTION
a7	JK72-20252A	PMO-BILL PARTITION	4		Y	
a8	JK72-20254A	PMO-COIN PARTITION(5B6C)	5		Y	SPARE 1EA
a9	JK72-20251A	PMO-BILL COIN TILL(5B6C)	1		Y	

a. ASS'Y BILL-COIN (4B8C)

No.	Code No.	Description / Specification	Q`ty	Design-Location	Serviceable	Remark
a	JK97-20068A	MEA-UNIT BILL COIN : PLASTIC	1		Y	
	JK97-20068B	MEA-UNIT BILL COIN : STEEL	1		Y	OPTION
a1	JK70-50070A	SCREW-TAPTITE:BLACK	3		Y	
a2	JK70-20068A	IPR-PLATE HOLDER(4B8C)	1		Y	
a3	JK70-30014A	SPRING-LEVER PRESS(MD)	4		Y	
a4	JK70-30015A	SPRING-LEVER PRESS(PD)	4		Y	OPTION
a5	JK72-20259A	PMO-LEVER PRESS(PLASTIC)	4		Y	
a6	JK70-20067A	IPR-LEVER PRESS(STEEL)	4		Y	OPTION
a7	JK72-20252A	PMO-BILL PARTITION	3		Y	
a8	JK72-20253A	PMO-COIN PARTITION(4B8C)	4		Y	
a9	JK72-20250A	PMO-BILL COIN TILL(4B8C)	1		Y	

b. ASS'Y HOUSING

No.	Code No.	Description / Specification	Q`ty	Design-Location	Serviceable	Remark
b	JK97-20062G	MEA-UNIT HOUSING : NONE HOLE	1		N	WHTIE
	JK97-20062H	MEA-UNIT HOUSING : NONE HOLE	1		N	BLACK
b1	JK72-20256A	PMO-COVER DECO	1		Y	
b2	JK72-20257A	PMO-COVER FRONT	1		Y	WHITE
	JK72-20257B	PMO-COVER FRONT	1		Y	BLACK
b3	JK70-20062G	IPR-HOUSING DRAWER : NONE HOLE	1		Y	WHITE
	JK70-20062H	IPR-HOUSING DRAWER : NONE HOLE	1		Y	BLACK
b4	JK70-50070A	SCREW-TAPTITE : BLACK	3		Y	

7-2 DRAWER

7-2-1. I. ASS'Y-DRAWER (Aplus DRAWER)

c. ASS'Y LOCK

No.	Code No.	Description / Specification	Q`ty	Design-Location	Serviceable	Remark
c	JK97-00982A	MEA-UNIT LOCK : 24V	1		Y	
	JK97-00982B	MEA-UNIT LOCK : 12V	1		Y	
c1	JK33-10500A	SOLENOID-DC : 24V	1		Y	
	JK33-10500D	SOLENOID-DC : 12V	1		Y	
c2	6001-000525	SCREW-MACHINE	2		Y	
c3	6001-000131	SCREW-MACHINE	2		Y	
c4	JK81-20077A	ASSY-COMPULSORY	1		Y	
c4-1	3405-001012	SWITCH-MICRO : 3PIN	1		N	
c4-2	JK39-40689A	HARNESS-DRAWER COMPULSORY	1		N	
c5	6107-001041	SPRING-LOCK LEVER	1		Y	
c6	6002-000201	SCREW-TAPPING(RH)	3		Y	
c7	JK75-00027B	MEC-LOCK LEVER : SHORT LEVER	1		Y	
c8	JK70-30017A	SPRING-PUSH	1		Y	
c9	JK73-20210A	REX-BUMPER	1		Y	
c10	6002-000157	SCREW-TAPPING	1		Y	

d. ASS'Y BOTTOM

No.	Code No.	Description / Specification	Q`ty	Design-Location	Serviceable	Remark
d	JK97-20064C	MEA-UNIT BOTTOM	1		N	WHITE
	JK97-20064D	MEA-UNIT BOTTOM	1		N	BLACK
d1	JK81-20063B	AS-RAIL OUTER LH	1		Y	5B6C
d2	JK72-20255C	PMO-COVER BOTTOM : NO LOGO	1		Y	WHITE
	JK72-20255D	PMO-COVER BOTTOM : NO LOGO	1		Y	BLACK
d3	JK61-40201A	FOOT	5		Y	
d4	JK81-20064B	AS-RAIL OUTER RH	1		Y	5B6C
d5	6003-000267	SCREW-TAPTITE	6		Y	
d6	Jk70-50073A	SCREW-DELTA PT	3		Y	WHITE
	Jk70-50073B	SCREW-DELTA PT	3		Y	BLACK
d7	JK39-60071A	CABLE-DRAWER : RJ-11, 1M	1		Y	WHITE
	JK39-60071B	CABLE-DRAWER : RJ-11, 1M	1		Y	BLACK

7-2 DRAWER

7-2-1. I. ASS'Y-DRAWER (Aplus DRAWER)

e. ASS'Y TRAY

No.	Code No.	Description / Specification	Q`ty	Design-Location	Serviceable	Remark
e	JK97-20066A	MEA-UNIT TRAY	1		Y	WHITE
	JK97-20066B	MEA-UNIT TRAY	1		Y	BLACK
e1	JK74-40902A	RPR-TENSION	2		Y	
e2	JK70-70037A	ICT-SHAFT PUSH LEVER	1		Y	
e3	JK70-40302A	ICT-SHAFT PIN	1		Y	
e4	JK97-20059B	MEA-FRAME TRAY	1		Y	WHITE
	JK97-20059D	MEA-FRAME TRAY	1		Y	BLACK
e5	JK70-10323A	IPR-PLATE CLIP	1		Y	
e6	JK70-20074A	IPR-LEVER LOCK	1		Y	
e7	6044-000231	RING-E : ID 5	1		Y	
e8	Jk75-20041A	MEC-LOCK : KEY NO.2424	1		Y	
	Jk75-20041B	MEC-LOCK : KEY NO.2442	1		Y	
	Jk75-20041C	MEC-LOCK : KEY NO.3353	1		Y	
	Jk75-20041D	MEC-LOCK : KEY NO.3355	1		Y	
	Jk75-20041E	MEC-LOCK : KEY NO.4224	1		Y	
	Jk75-20041F	MEC-LOCK : KEY NO.4242	1		Y	
	Jk75-20041G	MEC-LOCK : KEY NO.5355	1		Y	
	Jk75-20041H	MEC-LOCK : KEY NO.5535	1		Y	
e9	6044-000124	RING-E : ID 3	1		Y	
e10	JK70-30016A	SPRING-PUSH LEVER	1		Y	
e11	JK70-20070A	IPR-PUSH LEVER	1		Y	
e12	6044-000125	RING-E : ID 4	1		Y	
e13	JK70-20075A	IPR-KEY DRAWER : KEY NO.2424	1SET		Y	2EA
	JK70-20075B	IPR-KEY DRAWER : KEY NO.2442	1SET		Y	2EA
	JK70-20075C	IPR-KEY DRAWER : KEY NO.3353	1SET		Y	2EA
	JK70-20075D	IPR-KEY DRAWER : KEY NO.3355	1SET		Y	2EA
	JK70-20075E	IPR-KEY DRAWER : KEY NO.4224	1SET		Y	2EA
	JK70-20075F	IPR-KEY DRAWER : KEY NO.4242	1SET		Y	2EA
	JK70-20075G	IPR-KEY DRAWER : KEY NO.5355	1SET		Y	2EA
	JK70-20075H	IPR-KEY DRAWER : KEY NO.5535	1SET		Y	2EA

7-2 DRAWER

7-2-2. I. ASS'Y-DRAWER (G-DRAWER:4B8C,5B6C)

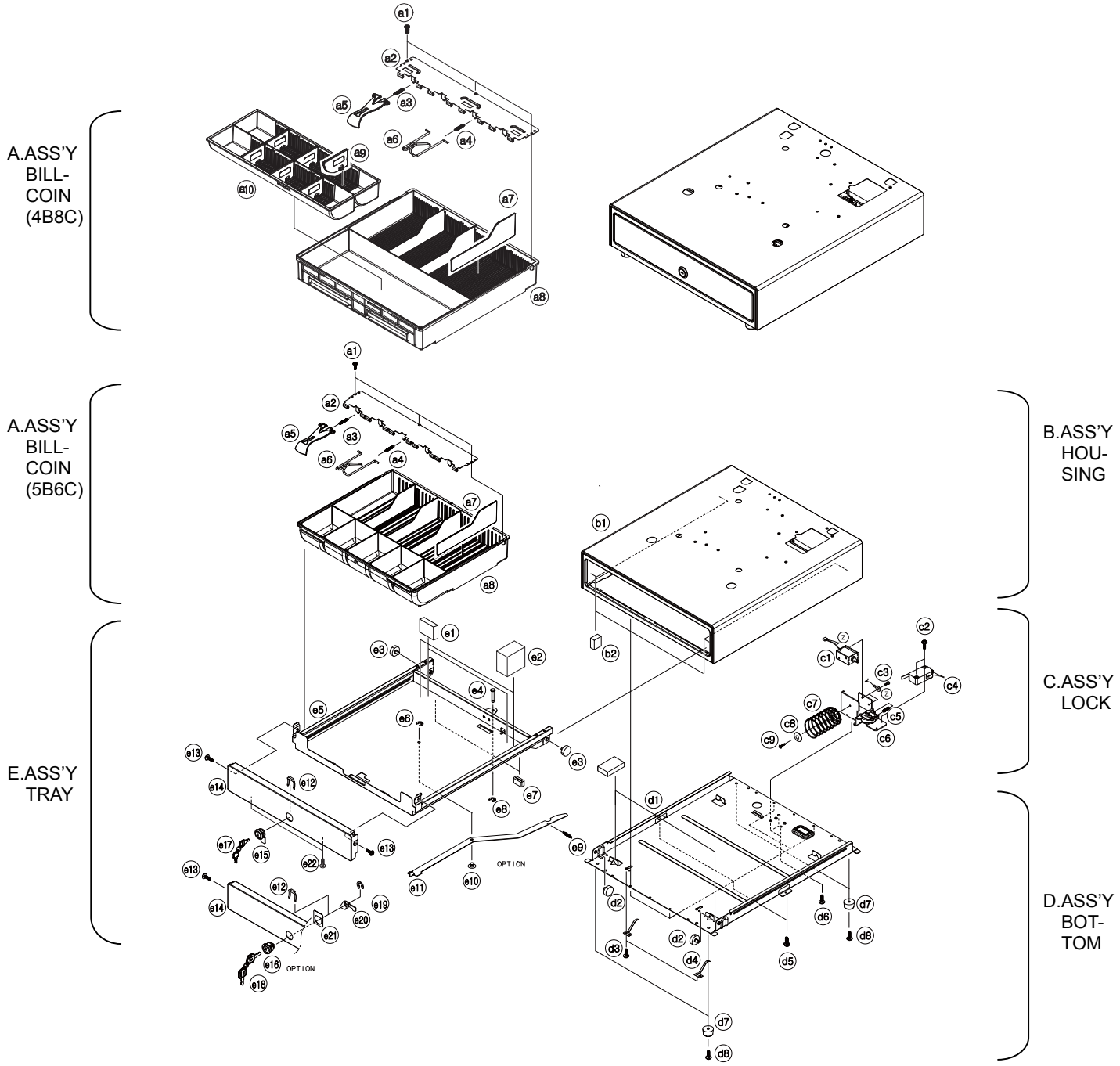

Figure7-16 ASS'Y-DRAWER (G-DRAWER:4B8C,5B6C)

7-2 DRAWER

7-2-2. I. ASS'Y-DRAWER (G-DRAWER:4B8C,5B6C)

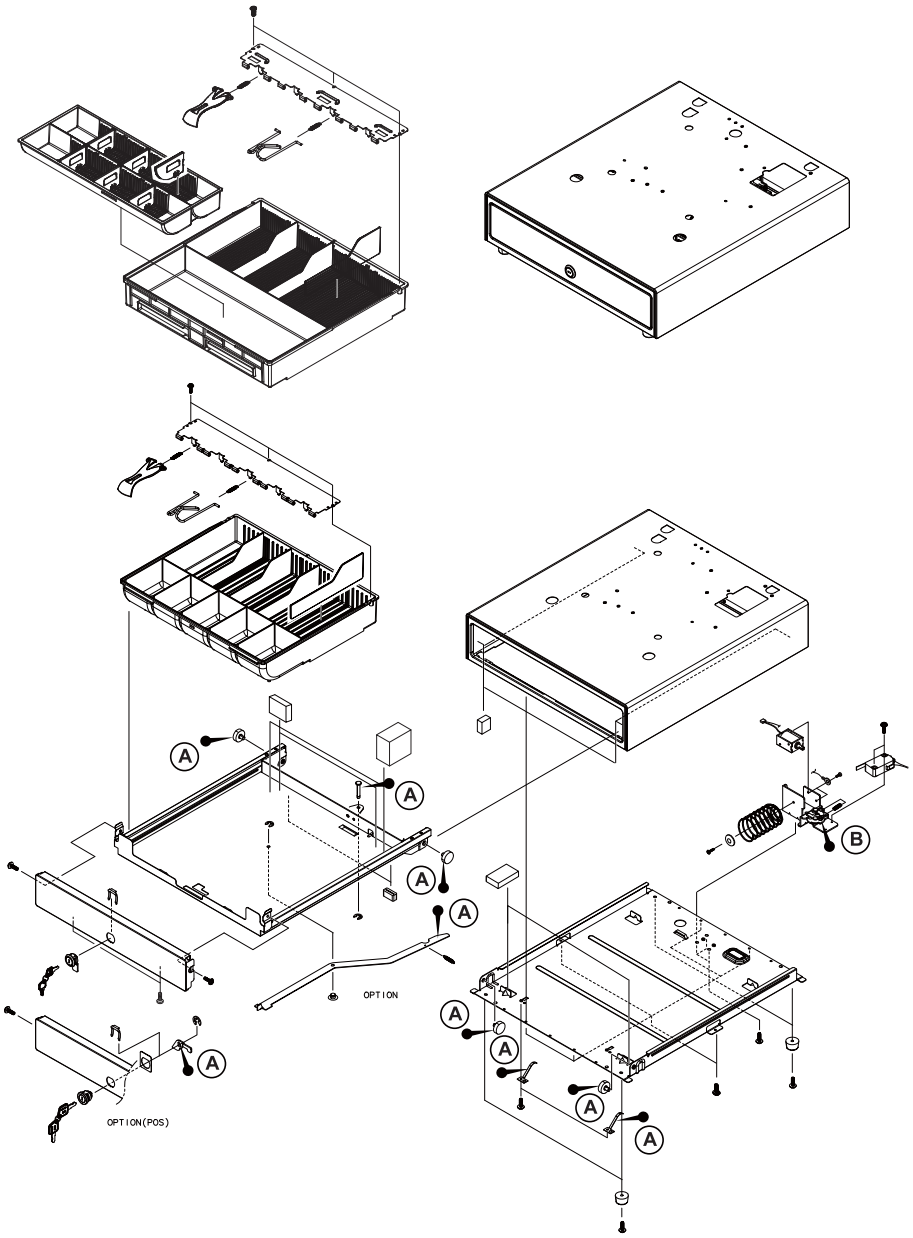

Figure 7-17 Lubrication Points of the G-Drawer(4B8C,5B6C)

No.	Code No.	Description / Specification	Q`ty	Serviceable	Remark
A	0201-002010	GREASE-N2	-	Y	Minimum Serviceable Packing Weight : 40g
B	0201-002009	GREASE-N1	-	Y	Minimum Serviceable Packing Weight : 40g

7-2 DRAWER

7-2-2. I. ASS'Y-DRAWER (G-DRAWER:4B8C,5B6C)

a. ASS'Y BILL-COIN

No.	Code No.	Description / Specification	Q`ty	Design-Location	Serviceable	Remark
a	JK97-20094B	MEA-UNIT BILL COIN(4B8C,PLASTIC)	1		Y	
a1	6002-000175	SCREW-TAPPING : M3,L8	3		Y	
a2	JK70-20114A	IPR-HOLDER PLATE(4B8C)	1		Y	
a3	JK70-30014A	SPRING-LEVER PRESS(MD)	4		Y	
a4	JK70-30015A	SPRING-LEVER PRESS(PD)	4		Y	OPTION
a5	JK72-20259A	PMO-LEVER PRESS(PLASTIC)	4		Y	
a6	JK70-20067A	IPR-LEVER PRESS(STEEL)	4		Y	OPTION
a7	JK72-40269A	PMO-BILL PARTITION	3		Y	
a8	JK72-20088A	PMO-BILL COIN TILL : 4B8C	1		Y	
a9	JK72-20090A	PMO-COIN PARTITION	6		Y	
a10	JK72-20089A	PMO-COIN TILL	1		Y	

a. ASS'Y BILL-COIN

No.	Code No.	Description / Specification	Q`ty	Design-Location	Serviceable	Remark
a	JK97-20094A	MEA-UNIT BILL COIN(5B5C)	1		Y	
a1	6002-000175	SCREW-TAPTITE : M3,L8	3		Y	
a2	JK70-20113A	IPR-HOLDER PLATE(5B5C)	1		Y	
a3	JK70-30014A	SPRING-LEVER PRESS(MD)	5		Y	
a4	JK70-30015A	SPRING-LEVER PRESS(PD)	5		Y	OPTION
a5	JK72-20259A	PMO-LEVER PRESS(PLASTIC)	5		Y	
a6	JK70-20067A	IPR-LEVER PRESS(STEEL)	5		Y	OPTION
a7	JK72-40269A	PMO-BILL PARTITION	4		Y	
a8	JK72-40268A	PMO-BILL COIN TILL : 5B5C	1		Y	

b. ASS'Y HOUSING

No.	Code No.	Description / Specification	Q`ty	Design-Location	Serviceable	Remark
b	JK97-20095A	MEA-UNIT HOUSING(STD,WHT)	1		N	
	JK97-20095B	MEA-UNIT HOUSING(NON,WHT)	1		N	
	JK97-20095E	MEA-UNIT HOUSING(STD,BLK)	1		N	
	JK97-20095F	MEA-UNIT HOUSING(NON,BLK)	1		N	

c. ASS'Y LOCK

No.	Code No.	Description / Specification	Q`ty	Design-Location	Serviceable	Remark
c	JK97-20093C	MEA-UNIT LOCK(12V,COM)	1		Y	
	JK97-20093D	MEA-UNIT LOCK(24V,COM)	1		Y	
c1	JK33-10500A	SOLENOID-DC: 24V	1		Y	
	JK33-10500D	SOLENOID-DC: 12V	1		Y	
c2	6001-000525	SCREW-TAPTITE: M3,L14	2		Y	
c3	JK70-50079A	SCREW-TAPTITE: M3,L5	2		Y	
c4	JK39-40301R	CBF HARNESS : MICRO S/W	1		Y	
c5	6107-001041	SPRING-LOCK LEVER	1		Y	
c6	JK97-01080B	MEC-SUB LOCK	1		N	
c7	JK70-30019A	SPRING-PUSH	1		Y	
c8	JK70-50090A	PLAIN-WASHER	1		Y	
c9	JK70-50092A	SCREW-TAPTITE: M5,L10	1		Y	

7-2 DRAWER

7-2-2. I. ASS'Y-DRAWER (G-DRAWER:4B8C,5B6C)

d. ASS'Y BOTTOM

No.	Code No.	Description / Specification	Q`ty	Design-Location	Serviceable	Remark
d	JK97-20096C	MEA-UNIT BOTTOM(5B5C,UNV)	1		N	
d1	JK70-20115B	IPR-BOTTOM PLATE	1		N	
d2	JK75-20068A	MEC-ROLLER(Φ 22)	2		Y	
d3	6003-000266	SCREW-TAPTITE: M3,L6	2		Y	
d4	JK70-10401A	IPR-PLATE GROUND	2		Y	
d5	6003-000266	SCREW-TAPTITE: M3,L6	6		Y	
d6	JK70-50092A	SCREW-TAPTITE: M5,L10	3		Y	
d7	JK61-40200A	FOOT-RUBBER:WHITE	4		Y	
	JK61-40200B	FOOT-RUBBER: BALCK	4		Y	
d8	6002-000234	SCREW-TAPTITE: M4,L16	4		Y	

e. ASS'Y TRAY

No.	Code No.	Description / Specification	Q`ty	Design-Location	Serviceable	Remark
e	Jk97-20097E	MEA-UNIT TRAY TILL(BLK,UNV)	1		N	
	Jk97-20097F	MEA-UNIT TRAY TILL(BLK,PUSH,UNV)	1		N	
e1	JK70-60041A	RMO-RUBBER STOPPER	2		Y	
e2	JK70-60042A	RMO-PAD UNIVERSAL	2		Y	
e3	JK75-20068A	MEC-ROLLER	2		Y	
e4	JK70-40302A	ICT-SHAFT PIN	1		Y	
e5	JK97-20100A	MEA-TRAY TILL	1		N	
e6	6044-000124	RING-E: ID3	1		Y	
e7	JK70-60041A	RMO-RUBBER STOPPER	2		Y	
e8	6044-000124	RING-E: ID3	1		Y	
e9	JK70-30020A	SPRING-LEVER PUSH	1		Y	
e10	JK70-40905A	ICT-SHAFT LEVER PUSH	1		Y	
e11	JK70-20116A	IPR-LEVER PUSH	1		Y	
e12	JK70-10323A	IPR-PLATE CLIP	1		Y	
e13	6003-000266	SCREW-TAPTITE: M3,L6	2		Y	
e14	JK70-20108A	IPR-FRONT PANEL(5B5C,WHT)	1		Y	
	JK70-20108B	IPR-FRONT PANEL(5B5C,BLK)	1		Y	
	JK70-20108C	IPR-FRONT PANEL(4B8C,WHT)	1		Y	
	JK70-20108D	IPR-FRONT PANEL(4B8C,BLK)	1		Y	
e15	Jk75-20067A	MEC-KEY LOCK	1		Y	
e16	JK75-20041A	MEC-KEY LOCK: #2424	1		Y	OPTION
e17	JK70-20025B	IPR-KEY DRAWER	1SET		Y	
e18	JK70-20075A	IPR-KEY DRAWER: #2424	1SET		Y	OPTION
e19	6044-000231	RING-E: ID5	1		Y	
e20	JK70-20074A	IPR-LEVER LOCK	1		Y	
e21	JK70-20120A	IPR-DUMMY KEY	1		Y	
e22	JK70-50094A	SCREW-TAPTITE: M3,L8	2		Y	

7-2 DRAWER

7-2-2. I. ASS'Y-DRAWER (G-DRAWER:5B8C)

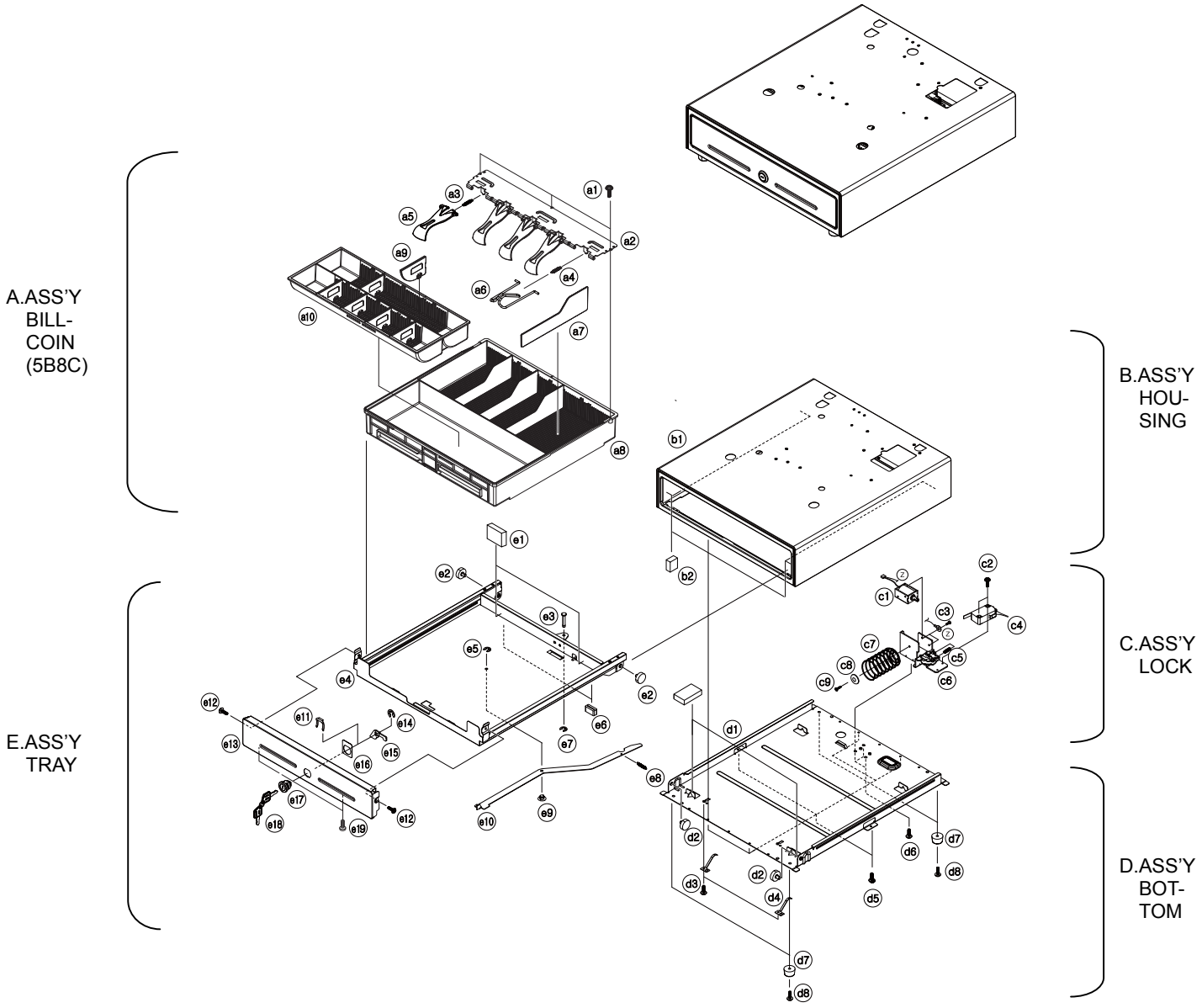

Figure7-18 ASS'Y-DRAWER (G-DRAWER:5B8C)

7-2 DRAWER

7-2-2. I. ASS'Y-DRAWER (G-DRAWER:5B8C)

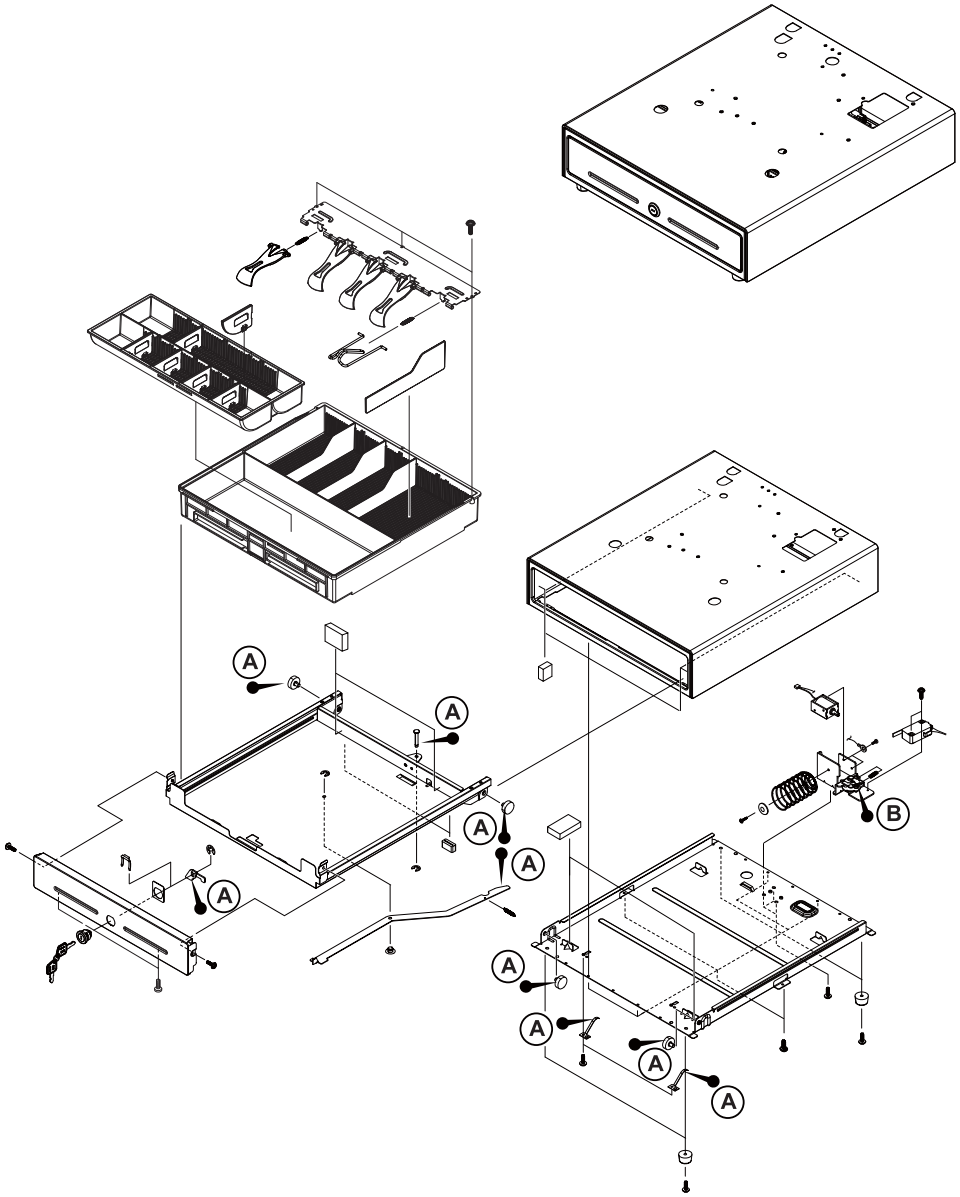

Figure 7-19 Lubrication Points of the G-Drawer(5B8C)

No.	Code No.	Description / Specification	Q`ty	Serviceable	Remark
A	0201-002010	GREASE-N2	-	Y	Minimum Serviceable Packing Weight : 40g
B	0201-002009	GREASE-N1	-	Y	Minimum Serviceable Packing Weight : 40g

7-2 DRAWER

7-2-2. I. ASS'Y-DRAWER (G-DRAWER:5B8C)

a. ASS'Y BILL-COIN

No.	Code No.	Description / Specification	Q`ty	Design-Location	Serviceable	Remark
a	JK97-20094E	MEA-UNIT BILL COIN(5B8C,PLASTIC)	1		Y	
a	JK97-20094F	MEA-UNIT BILL COIN(5B8C,STEEL)	1		Y	
a1	6002-000175	SCREW-TAPPING : M3,L8	3		Y	
a2	JK70-20114A	IPR-HOLDER PLATE(4B8C)	1		Y	
a3	JK70-30014A	SPRING-LEVER PRESS(MD)	5		Y	
a4	JK70-30015A	SPRING-LEVER PRESS(PD)	5		Y	OPTION
a5	JK72-20259A	PMO-LEVER PRESS(PLASTIC)	5		Y	
a6	JK70-20067A	IPR-LEVER PRESS(STEEL)	5		Y	OPTION
a7	JK72-40269A	PMO-BILL PARTITION	4		Y	
a8	JK72-20088A	PMO-BILL COIN TILL	1		Y	
a9	JK72-20090A	PMO-COIN PARTITION	6		Y	
a10	JK72-20089A	PMO-COIN TILL	1		Y	

b. ASS'Y HOUSING

No.	Code No.	Description / Specification	Q`ty	Design-Location	Serviceable	Remark
b	JK97-20095A	MEA-UNIT HOUSING(STD,WHT)	1		N	
	JK97-20095B	MEA-UNIT HOUSING(NON,WHT)	1		N	
	JK97-20095E	MEA-UNIT HOUSING(STD,BLK)	1		N	
	JK97-20095F	MEA-UNIT HOUSING(NON,BLK)	1		N	

c. ASS'Y LOCK

No.	Code No.	Description / Specification	Q`ty	Design-Location	Serviceable	Remark
c	JK97-20093C	MEA-UNIT LOCK(12V,COM)	1		Y	
	JK97-20093D	MEA-UNIT LOCK(24V,COM)	1		Y	
c1	JK33-10500A	SOLENOID-DC: 24V	1		Y	
	JK33-10500D	SOLENOID-DC: 12V	1		Y	
c2	6001-000525	SCREW-TAPTITE: M3,L14	2		Y	
c3	JK70-50079A	SCREW-TAPTITE: M3,L5	2		Y	
c4	JK39-40301R	CBF HARNESS : MICRO S/W	1		Y	
c5	6107-001041	SPRING-LOCK LEVER	1		Y	
c6	JK97-01080B	MEC-SUB LOCK	1		N	
c7	JK70-30019A	SPRING-PUSH	1		Y	
c8	JK70-50090A	PLAIN-WASHER	1		Y	
c9	JK70-50092A	SCREW-TAPTITE: M5,L10	1		Y	

7-2 DRAWER

7-2-2. I. ASS'Y-DRAWER (G-DRAWER: 5B8C)

d. ASS'Y BOTTOM

No.	Code No.	Description / Specification	Q`ty	Design-Location	Serviceable	Remark
d	JK97-20096C	MEA-UNIT BOTTOM	1		N	
d1	JK70-20115B	IPR-BOTTOM PLATE	1		N	
d2	JK75-20068A	MEC-ROLLER(Φ 22)	2		Y	
d3	6003-000266	SCREW-TAPTITE: M3,L6	2		Y	
d4	JK70-10401A	IPR-PLATE GROUND	2		Y	
d5	6003-000266	SCREW-TAPTITE: M3,L6	6		Y	
d6	JK70-50092A	SCREW-TAPTITE: M5,L10	3		Y	
d7	JK61-40200A	FOOT-RUBBER:WHITE	4		Y	
	JK61-40200B	FOOT-RUBBER: BALCK	4		Y	
d8	6002-000234	SCREW-TAPTITE: M4,L16	4		Y	

e. ASS'Y TRAY

No.	Code No.	Description / Specification	Q`ty	Design-Location	Serviceable	Remark
e	Jk97-20097F	MEA-UNIT TRAY TILL(BLK,PUSH,UNV)	1		N	
e1	JK70-60041A	RMO-RUBBER STOPPER	2		Y	
e2	JK75-20068A	MEC-ROLLER	2		Y	
e3	JK70-40302A	ICT-SHAFT PIN	1		Y	
e4	JK97-20100A	MEA-TRAY TILL	1		N	
e5	6044-000124	RING-E: ID3	1		Y	
e6	JK70-60041A	RMO-RUBBER STOPPER	2		Y	
e7	6044-000124	RING-E: ID3	1		Y	
e8	JK70-30020A	SPRING-LEVER PUSH	1		Y	
e9	JK70-40905A	ICT-SHAFT LEVER PUSH	1		Y	
e10	JK70-20116A	IPR-LEVER PUSH	1		Y	
e11	JK70-10323A	IPR-PLATE CLIP	1		Y	
e12	6003-000266	SCREW-TAPTITE: M3,L6	2		Y	
e13	JK70-20108D	IPR-FRONT PANEL	1		Y	
e14	6044-000231	RING-E: ID5	1		Y	
e15	JK70-20074A	IPR-LEVER LOCK	1		Y	
e16	JK70-20120A	IPR-DUMMY KEY	1		Y	
e17	JK75-20041A	MEC-KEY LOCK: #2424	1		Y	
e18	JK70-20075A	IPR-KEY DRAWER: #2424	1SET		Y	
e19	JK70-50094A	SCREW-TAPTITE: M3,L8	2		Y	

8 PCB Layout and Parts List

8-1 Main PCB

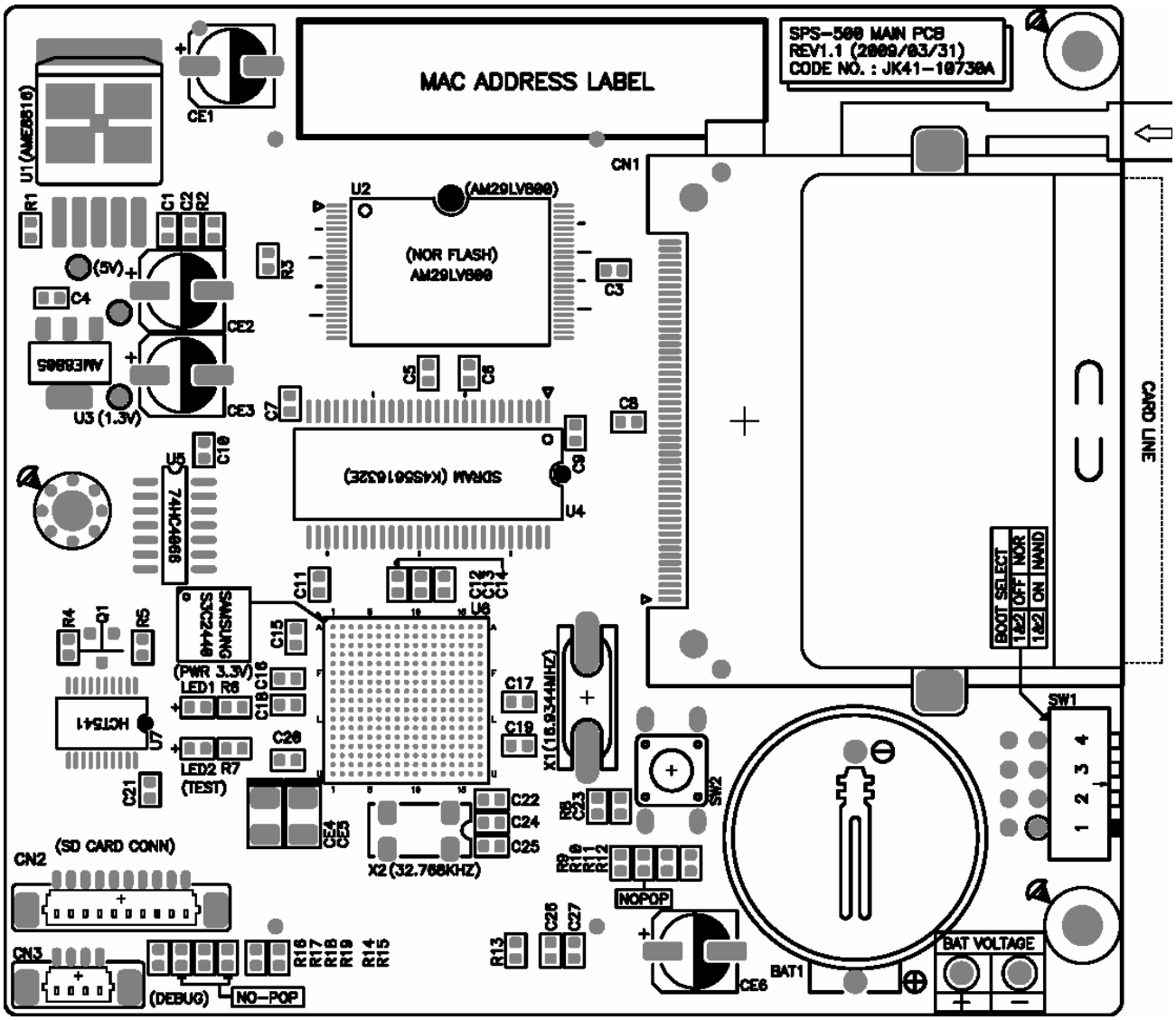

8-1 Main PCB

No	Part-No	Description / Specification	Q'TY	Design-location	Serviceable	Remark
-	**JK92-01610A**	**PBA MAIN:SPS-500,2MBYTE**	**1**	**ASS'Y**	Y	
-	3407-000184	SWITCH-DIP:4 KNOB,DA-04,DIP,RIGHT AN,8P	1	SW1	Y	
-	4303-000001	BATTERY-COIN:ML2032,3V,65mAH,PI20,T3.2	1	BAT1	Y	
-	3712-000055	CONNECTOR-COIN BAT HOLDER;2P,ST,20PI,T3	1	BAT1	Y	
-	JC68-10564A	LABEL(P)-PROTECTOR:SLB-3108H,ART,-,100(S	2	ROM VER. BARCODE	N	
-	0404-001052	DIODE-SCHOTTKY:BAT43WS,BAT54WS,30V	2	D1,D2	Y	
-	0501-000457	TR-SMALL SIGNAL:MMBT2222A,NPN,350MW,SOT	1	Q1	Y	
-	0602-000001	LED;SSC-UR101,RED,1608,SMD	2	LED1,LED2	Y	
-	0801-001105	IC-CMOS;SN74LVC138A,DECODER,TSOP,16P	2	U8,U16	Y	
-	0801-001110	IC-CMOS;74LV14A,INVERTER,TSOP,14P	1	U17	Y	
-	0801-001118	IC-CMOS LOGIC:74HCT541,BUFFER,TSSOP,20P	3	U7,U15,U18	Y	
-	0801-001122	IC-CMOS LOGIC:74HC4066,SWITCH,SOP,14P	1	U5	Y	
-	0903-001162	IC-CPU:S3C2440AL-40,FBGA,289P	1	U6	Y	
-	0904-001257	IC-CONTROLLER;TL16C752B,PQFP,48P,	1	U10	Y	
-	1006-000270	IC-ETHERNET:DM9000BEP,LQFP,48P	1	U13	Y	
-	1106-001228	IC-SRAM:R1LV1616RSD-7SI,2MBYTE,uTSOP,52P	1	U14	Y	
-	1106-001230	IC-SDRAM;K4S561632E-UC/L75,16M*16,54P	2	U4,U12	Y	
-	1107-001130	IC-FLASH MEMORY;A29L800UV-70,TSOP,48P	1	U2	Y	
-	1107-001140	IC-FLASH:K9F1208U0A-PCB0,TSOP1,NAND	1	U9	Y	
-	1203-000500	IC-RESET;AME8500AEETAE29Z,SOT-23,3P	1	U19	Y	
-	1203-001764	IC-REGULATOR;AME88051EGTZ,1.3V,SOT-223	1	U3	Y	
-	1203-001765	IC-REGULATOR;AME8807AEHAZ,SOP,8P	1	U11	Y	
-	1203-001766	IC-REGULATOR;AME8816AEDV-3.3V,TO-263-5	1	U1	Y	
-	2008-000001	R-CHIP:0 OHM,5%,1/10W,1608	4	R9,R31,R37,R40	N	
-	2008-000008	R-CHIP:100 OHM,5%,1/10W,1608	2	R35,R52	N	
-	2008-000020	R-CHIP:470 OHM,5%,1/10W,1608	1	R30	N	
-	2008-000026	R-CHIP:1KOHM,1%,1/10W,1608,1%	3	R6,R7,R53	N	
-	2008-000028	R-CHIP:1.5KOHM,1%,1/10W,1608,1%	1	R22	N	
-	2008-000030	R-CHIP:2KOHM,5%,1/10W,1608	1	R23	N	
-	2008-000037	R-CHIP:4.7KOHM,1%,1/10W,1608,1%	25	R2-R5,R8,R11-R16,R18, R25,R27,R28,R32-R34, R41,R45,R54,R56,R58, R59,R60	N	
-	2008-000041	R-CHIP:6.8KOHM,1%,1/10W,1608,1%	1	R26	N	

8-1 Main PCB

No	Part-No	Description / Specification	Q'TY	Design-location	Serviceable	Remark
-	2008-000044	R-CHIP:10KOHM,1%,1/10W,1608,1%	11	R21,R24,R42,R43,R44, R46-R51	N	
-	2008-000063	R-CHIP:100KOHM,5%,1/10W,1608	2	R1,R29	N	
-	2008-000074	R-CHIP:1MOHM,5%,1/10W,1608	1	R20	N	
-	2204-000003	C-CERAMIC,CHIP:15pF,5%,50V,1608	2	C55,C57	Y	
-	2204-000004	C-CERAMIC,CHIP:22pF,5%,50V,1608	6	C24,C25,C28,C29,C53, C54	Y	
-	2204-000010	C-CERAMIC,CHIP:100pF,5%,50V,1608	4	C33,C45,C67,C68	Y	
-	2204-000016	C-CERAMIC,CHIP:680pF,5%,50V,1608	1	C19	Y	
-	2204-000018	C-CERAMIC,CHIP:1nF,10%,50V,X7R,1608	3	C1,C26,C27	Y	
-	2204-000028	C-CERAMIC,CHIP:100nF,+80-20%,25V,Y5V,160	51	C2-C18,C20-C23,C30-C32 C34-C44,C46-C52,C56, C58,C60-C66	Y	
-	2204-000035	C-CERAMIC,CHIP:1.2nF,10%,50V,X7R,1608	1	C59	Y	
-	2205-000002	C-TANTAL:10uF,16V,3528	5	CE4,CE5,CE7-CE9	Y	
-	2402-000168	C-AL,SMD:100uF,20%,16V,GP,TP,8.3x8.3x6.3	4	CE1-CE3,CE6	Y	
-	2801-000111	CRYSTAL-SMD:32.768KHz,20ppm,28-AAW,20pF	1	X2	Y	
-	2801-003383	CRYSTAL-SMD:16.9344MHz,SX-1,20pF	1	X1	Y	
-	2801-003384	CRYSTAL-SMD:SX-1,22.1184MHZ,30ppm,18pF	1	X3	Y	
-	2801-003389	CRYSTAL-SMD:25MHz,SX-1,20pF	1	X4	Y	
-	3711-004119	WAFER;BOX-HEADER,1R, 4P,1.25mm,SMD,IVY	1	CN3	Y	
-	3711-004125	WAFER;BOX-HEADER,1R,10P,1.25mm,SMD	1	CN2	Y	
-	3712-000027	CONN-BOX;RECEPTACLE,51P,1MM,ST,HRS	2	CN4,CN5	Y	
-	3712-000062	CONN-CF:HEADER,50P,RIGHT BUTTON,HRS	1	CN1	Y	
-	JK41-10730A	PCB-MAIN:SPS-500,FR-4,6L,T1.6	1	PCB	N	

8-2 I/O PCB

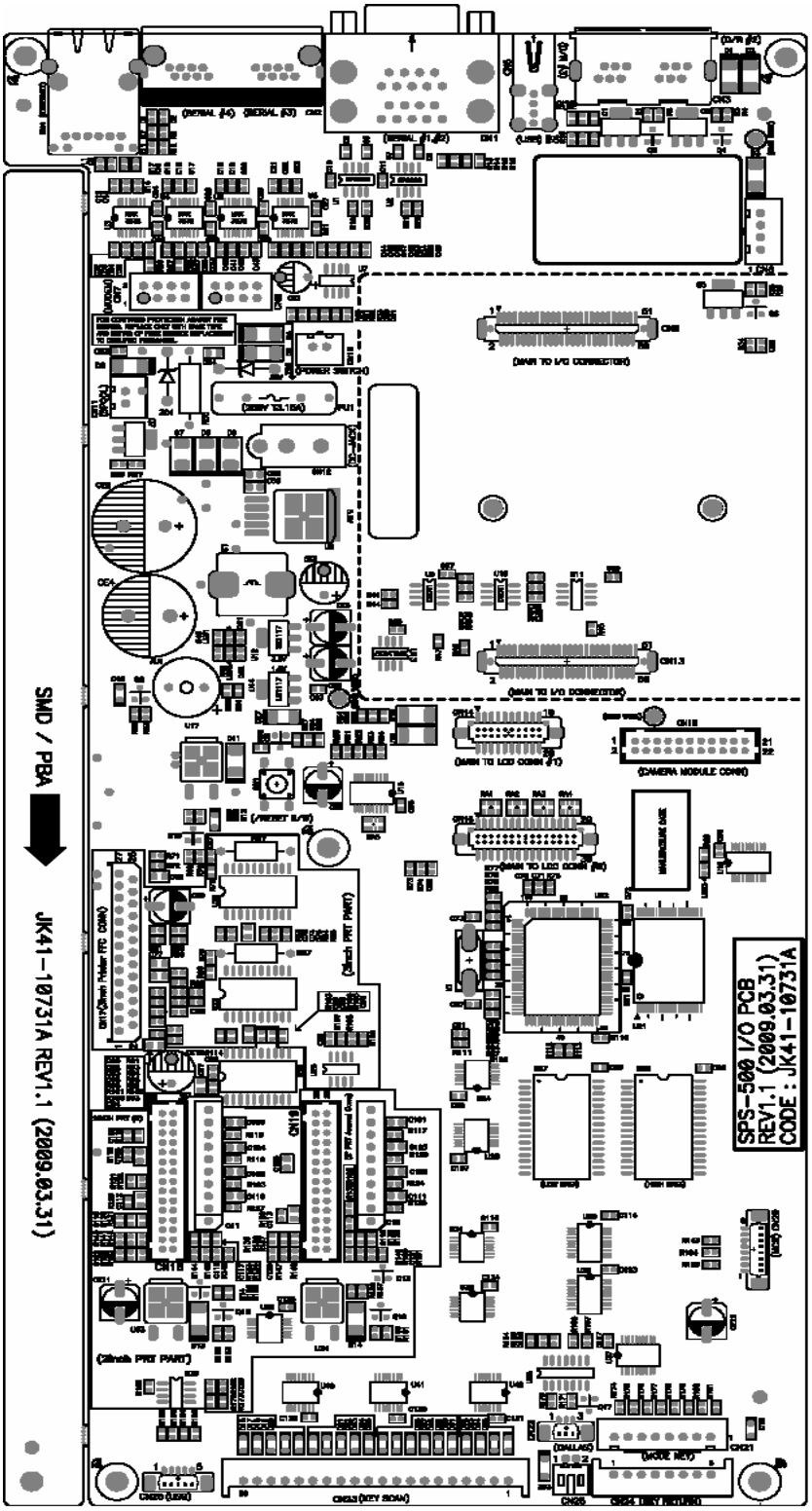
SMD / PBA
JK41-10731A REV1.1 (2009.03.31)
SPS-500 I/O PCB
REV1.1 (2009.03.31)
CODE : JK41-10731A

8-2 I/O PCB

No	Part-No	Description / Specification	Q'TY	Design-location	Serviceable	Remark
-	**JK92-01615A**	**PBA I/O:SPS-500,3" & 2" 2-ST**	**1**	**ASS'Y**	Y	
-	0403-000141	DIODE-ZENER:6.2V,IN4735A,BZX85C6V2	1	ZD1	Y	
-	0403-000161	DIODE-ZENER:30V,1N4751A,BZX85C30	1	ZD2	Y	
-	0506-001019	TR-ARRAY:STA471A,NPN,4,4W,SIP-10,ST,200	2	Q11,Q12	Y	
-	2001-001292	R-CARBON:0.5OHM,5%,1/2W	2	R67,R87	Y	
-	2003-000502	R-METAL OXIDE(S):150Ω ,5%,2W,TC,3.8*10.6	1	R35	Y	
-	2401-000032	C-AL:100uF,50V,RADIAL,φ8*11.5L,RoHS	1	CE10	Y	
-	2401-000131	C-AL:1000uF,16V,RADIAL,φ10*20L,RoHS	1	CE3	Y	
-	2401-001320	C-AL:4700uF,35V,Miniature,16x35.5mm,RoHS	1	CE4	Y	
-	2401-002075	C-AL:4.7uF,20%,50V,GP,TP,5x11,5	1	CE1	Y	
-	2401-002621	C-AL:2200uF,20%,50V,RADIAL,φ18*25L,RoHS	1	CE2	Y	
-	3002-001027	BUZZER-PIEZO:85dB,1.5V,24mA,2.048KHz,BK	1	AU1	Y	
-	3601-000261	FUSE-CARTRIDGE:250V,3.15A,TIME-LAG,GLASS	1	FU1	Y	
-	3602-000001	FUSE-CLIP:-,-,30mohm	2	FU1	Y	
-	3708-000215	CONNECTOR-FFC:20P,1R,2.54mm,ST,BLACK	1	CN23	Y	
-	3708-000327	CONNECTOR-FFC:8P,1R,2.54mm,ST,BLACK	1	CN24	Y	
-	3708-001391	CONNECTOR-FPC/FFC:27P,1.25mm,ST,BLACK	1	CN17	Y	
-	3711-000829	CONNECTOR-HEADER:BOX,2P,1R,6.2mm,ST	1	CN12	Y	
-	3711-000840	CONNECTOR-HEADER:BOX,30P,2R,2MM,ST,BLK	2	CN18,CN19	Y	
-	3711-004100	WAFER;BOX-HEADER,1R,2P,2.5mm,ST,WHITE	2	CN10,CN11	Y	
-	3711-004105	WAFER;BOX-HEADER,1R,4P,2.5mm,ST,WHITE	1	CN6	Y	
-	3712-000047	CONNECTOR-DSUB;9P(M),2-PORT,DUAL TYPE	1	CN1	Y	
-	3712-000048	CONNECTOR-USB HOST:USB A TYPE,DIP	1	CN5	Y	
-	3722-000001	JACK-MODULAR:12P/2C,-,AU,GRAY,-	1	CN3	Y	
-	3722-000211	JACK-MODULAR:8P/8C,2R,RJ-45,BLK	1	CN2	Y	
-	3722-001044	JACK-MODULAR:12P,LED GRN/YEL,DIP	1	CN4	Y	
-	JC68-10564A	LABEL(P)-PROTECTOR:SLB-3108H,ART,-,100	2	MANUFACTURE DATE ROM VER.	N	
-	0402-001189	DIODE-RECTIFIER:S1G-E3,M4,400V	9	D1-D6,D11,D13,D14	Y	
-	0403-000755	DIODE-ZENER:BZT52C6V2,6.2V,500mW,SOD-123	1	ZD3	Y	
-	0404-001051	DIODE-SCHOTTKY:SK14,40V,1A,DO-214AA,	3	D7-D9	Y	
-	0404-001052	DIODE-SCHOTTKY:BAT43WS,BAT54WS,30V	23	D10,D12,D15-D35	Y	

8-2 I/O PCB

No	Part-No	Description / Specification	Q'TY	Design-location	Serviceable	Remark
-	0501-000457	TR-SMALL SIGNAL:MMBT2222A,NPN,350MW,SOT	11	Q3,Q4,Q6,Q8-Q10, Q13-Q17	Y	
-	0502-000400	TR-POWER;SL1002,NPN,3A,10W,SOT-23	4	Q1,Q2,Q5,Q7	Y	
-	0505-000145	POWER MOSFET:SFR9024TF,D-PAK,-60V,-7.8A	3	U17,U33,U34	Y	
-	0602-000001	LED;SSC-UR101,RED,1608,SMD	3	LED1-LED3	Y	
-	0801-001063	IC-CMOS LOGIC:74HCT05,INVERTER,SOIC,14P	1	U38	Y	
-	0801-001085	IC-CMOS LOGIC:74HC08,TSOP,14P	1	U36	Y	
-	0801-001116	IC-CMOS LOGIC;74HC14,INVERTER,TSSOP,14P	2	U24,U31	Y	
-	0801-001117	IC-CMOS LOGIC:74HC138,DECODER,TSSOP	4	U29,U40-U42	Y	
-	0801-001118	IC-CMOS LOGIC:74HCT541,BUFFER,TSSOP,20P	4	U18,U30,U32,U37	Y	
-	0801-001119	IC-CMOS LOGIC:74HCT574,D-F/F,TSSOP	1	U19	Y	
-	0801-001120	IC-CMOS LOGIC:74HC32,OR GATE,TSSOP	1	U35	Y	
-	0903-001153	IC-MICROCOMPUTER:M16CM30302SPFP,100P	1	U22	Y	
-	1003-001235	IC-MOTOR DRIVER:TEA3718,SO-20,SOP,20P	3	U20,U23,U25	Y	
-	1006-000134	IC-DRIVER/RECEIVER:3232,TSSOP,16P,26MIL	4	U3-U6	Y	
-	1006-000300	IC-TRANSCEIVER;DS90LV027A,SOIC8,TTL-LVDS	1	U13	Y	
-	1106-000132	IC-SRAM:BS62LV1027SCP,128Kx8BIT,SOP,32P	2	U27,U28	Y	
-	1107-001121	IC-FLASH MEMORY:1M*8BIT/512K*16BIT,8M,5V	1	U21	Y	
-	1202-000164	IC-VOLTAGE COMPARATOR:KA393,SOP,8P,1.27m	6	U7,U9-U11,U26,U39	Y	
-	1203-001771	IC-REGULATOR:SE1117-1.8V,SOT-223,4P	1	U14	Y	
-	1203-001772	IC-REGULATOR:SE1117-3.3V,SOT-223,4P	1	U12	Y	
-	1203-001773	IC-REGULATOR:AP1501-50K5,5V,TO263,SMD,AP	1	U8	Y	
-	1203-001775	IC-REGULATOR:SP2026A-2EN-L,SOP,8P	2	U1,U2	Y	
-	2008-000001	R-CHIP:0 OHM,5%,1/10W,1608	1	R105	N	
-	2008-000003	R-CHIP:22 OHM,5%,1/10W,1608	4	R14,R15,R183,R184	N	
-	2008-000006	R-CHIP:56 OHM,5%,1/10W,1608	4	R7,R8,R11,R12	N	
-	2008-000008	R-CHIP:100 OHM,5%,1/10W,1608	12	R6,R10,R50,R51,R74,R82, R92,R110,R115,R130,R147 ,R152	N	
-	2008-000012	R-CHIP:200 OHM,5%,1/10W,1608	2	R88,R89	N	
-	2008-000015	R-CHIP:270 OHM,5%,1/10W,1608	2	R135,R140	N	
-	2008-000016	R-CHIP:300 OHM,5%,1/10W,1608	6	R98,R101,R136,R137, R141,R142	N	
-	2008-000020	R-CHIP:470 OHM,5%,1/10W,1608	7	R17,R18,R91,R93,R106, R145,R150	N	

8-2 I/O PCB

No	Part-No	Description / Specification	Q'TY	Design-location	Serviceable	Remark
-	2008-000026	R-CHIP:1KOHM,1%,1/10W,1608,1%	7	R75,R90,R144,R149,R164, R165,R171	N	
-	2008-000028	R-CHIP:1.5KOHM,1%,1/10W,1608,1%	4	R32,R46,R49,R68	N	
-	2008-000031	R-CHIP:2.2KOHM,5%,1/10W,1608	1	R170	N	
-	2008-000037	R-CHIP:4.7KOHM,1%,1/10W,1608,1%	46	R2,R4,R23-R27,R29,R33, R37-R39,R41,R42,R44, R53-R57,R60-R64,R70, R77-R80,R97-R100,R107, R157,R159,R167-R169, R174-R181	N	
-	2008-000041	R-CHIP:6.8KOHM,1%,1/10W,1608,1%	1	R84	N	
-	2008-000044	R-CHIP:10KOHM,1%,1/10W,1608,1%	54	R1,R3,R5,R9,R20,R22,R28, R34,R36,R40,R43,R45,R47, R48,R52,R59,R65,R69,R73, R76,R85,R95,R102,R104, R108,R109,R112,R113, R116-R120,R123-R125, R127-R129,R131,R143, R146,R148,R151, R153-R156,R158,R161, R163,R166,R172,R173	N	
-	2008-000046	R-CHIP:15KOHM,5%,1/10W,1608	7	R13,R16,R81,R121,R132, R182,R185	N	
-	2008-000047	R-CHIP:18KOHM,1%,1/10W,1608,1%	2	R30,R31	N	
-	2008-000048	R-CHIP:20KOHM,5%,1/10W,1608	2	R71,R72	N	
-	2008-000054	R-CHIP:36KOHM,1%,1/10W,1608,1%	6	R66,R99,R134,R139,R160, R162	N	
-	2008-000056	R-CHIP:47KOHM,1%,1/10W,1608,1%	4	R94,R96,R133,R138	N	
-	2008-000057	R-CHIP:56KOHM,5%,1/10W,1608	3	R83,R103,R114	N	
-	2008-000063	R-CHIP:100KOHM,5%,1/10W,1608	4	R19,R21,R58,R111	N	
-	2008-000065	R-CHIP:150KOHM,1%,1/10W,1608,1%	3	R86,R122,R126	N	
-	2011-001092	R-NETWORK:47ohm,5%,1/16W,L,CHIP,8P,TP	5	RA1-RA5	Y	
-	2203-000192	C-CERAMIC,CHIP:100nF,+80-20%,50V,Y5V,TP	19	C54-C56,C69,C74,C88, C97,C100,C101, C103-C106,C108-C113	N	
-	2203-000239	C-CERAMIC,CHIP:0.1nF,5%,50V,NP0,TP,2012	3	C80,C82,C94	N	
-	2204-000004	C-CERAMIC,CHIP:22pF,5%,50V,1608	2	C73,C87	N	
-	2204-000010	C-CERAMIC,CHIP:100pF,5%,50V,1608	2	C53,C71	N	
-	2204-000015	C-CERAMIC,CHIP:470pF,5%,50V,1608	16	C13,C14,C16,C17,C19, C20,C22-C31	N	
-	2204-000017	C-CERAMIC,CHIP:820pF,5%,50V,1608	5	C67,C75,C79,C89,C98	N	

8-2 I/O PCB

No	Part-No	Description / Specification	Q'TY	Design-location	Serviceable	Remark
-	2204-000028	C-CERAMIC,CHIP:100nF,+80-20%,25V,Y5V,160	81	C1-C12,C15,C18,C21, C32-C47,C49-C52, C57-C63,C65,C66,C68, C70,C72,C76-C78,C81, C83-C86,C90,C92,C93, C95,C96,C99,C102,C107, C114-C131	N	
-	2204-000029	C-CERAMIC,CHIP:1uF,+80-20%,16V,Y5V,1608	3	C48,C64,C91	N	
-	2205-000002	C-TANTAL:10uF,16V,3528	1	CE7	Y	
-	2402-000168	C-AL,SMD:100uF,20%,16V,GP,TP,8.3x8.3x6.3	6	CE5,CE6,CE8,CE9,CE11, CE12	Y	
-	2801-003380	CRYSTAL-SMD:9.216MHZ,SX-1,20pF	1	X1	Y	
-	3301-002000	CORE-MULTILAYER CHIP BEAD:CB,SMD,1608	1	L1	Y	
-	3603-000001	POLY-SW;MINISMDC110F,6V,1.1A,SMD	2	U15,U16	Y	
-	3711-000835	CON-HEADER:BOX,20P,2R,1.25MM,ST,SMD	1	CN14	Y	
-	3711-000839	CON-HEADER:BOX,30P,2R,1.25MM,ST,SMD	1	CN16	Y	
-	3711-004109	WAFER;BOX-HEADER,1R,8P,2.5mm,ST,WHITE	1	CN21	Y	
-	3711-004118	WAFER;BOX-HEADER,1R, 3P,1.25mm,SMD	1	CN22	Y	
-	3711-004123	WAFER;BOX-HEADER,1R, 8P,1.25mm,SMD	1	CN20	Y	
-	3711-004128	WAFER;BOX-HEADER,1R, 5P,1.25mm,SMD	1	CN26	Y	
-	3712-000028	CONNECTOR-BOX;HEADER,51P,1MM,ST,HRS	2	CN9,CN13	Y	
-	JK27-60102A	L-COIL:BDS-1055R,33uH,SMD,IND-330M-SM-12	1	L2	Y	
-	JK41-10731A	PCB-I/O:SPS-500,FR-4,2L,T1.6	1	PCB	N	

8-3 CF PCB

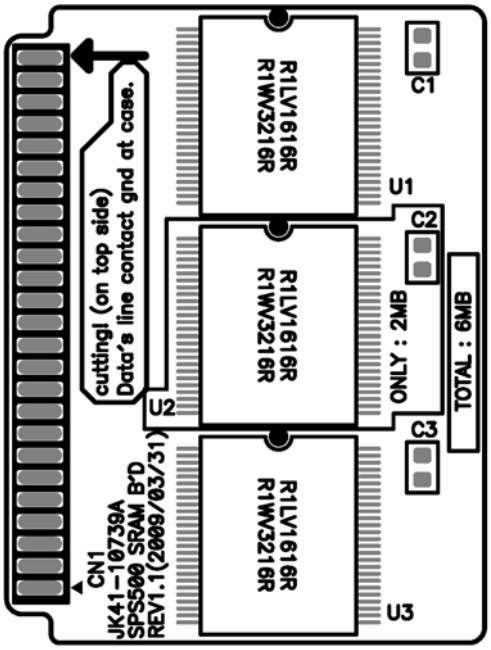

[6MByte]

No	Part-No	Description / Specification	Q'TY	Design-location	Serviceable	Remark
-	**JK92-01611A**	**PBA CF:SPS-500,6MBYTE**	**1**	**ASS'Y**	Y	
-	3712-000063	CONNECTOR-CF CASE:50P,AUK	1	CASE	Y	
-	3712-000064	CONNECTOR-CF CARD:50P,1.27mm,AUK	1	CN1	Y	
-	JK68-40139A	LABEL(P)-CF CARD:ART 100gr,35X30	1	CASE	N	
-	JC68-10564A	LABEL(P)-PROTECTOR:SLB-3108H,ART,-,100	1	MANUFACTURE DATE	N	
-	1106-001228	IC-SRAM:R1LV1616RSD-7SI,2MBYTE,uTSOP,52P	3	U1-U3	Y	
-	2204-000028	C-CERAMIC,CHIP:100nF,+80-20%,25V,Y5V,160	3	C1-C3	N	
-	JK41-10739A	PCB-CF CARD:SPS-500,FR-4,4L,T0.7	1	PCB	N	

[2MByte]

No	Part-No	Description / Specification	Q'TY	Design-location	Serviceable	Remark
-	**JK92-01611B**	**PBA CF:SPS-500,2MBYTE**	**1**	**ASS'Y**	Y	
-	3712-000063	CONNECTOR-CF CASE:50P,AUK	1	CASE	Y	
-	3712-000064	CONNECTOR-CF CARD:50P,1.27mm,AUK	1	CN1	Y	
-	JK68-40139A	LABEL(P)-CF CARD:ART 100gr,35X30	1	CASE	N	
-	JC68-10564A	LABEL(P)-PROTECTOR:SLB-3108H,ART,-,100	1	MANUFACTURE DATE	N	
-	1106-001228	IC-SRAM:R1LV1616RSD-7SI,2MBYTE,uTSOP,52P	1	U2	Y	
-	2204-000028	C-CERAMIC,CHIP:100nF,+80-20%,25V,Y5V,160	1	C2	N	
-	JK41-10739A	PCB-CF CARD:SPS-500,FR-4,4L,T0.7	1	PCB	N	

8-4 LCD PCB

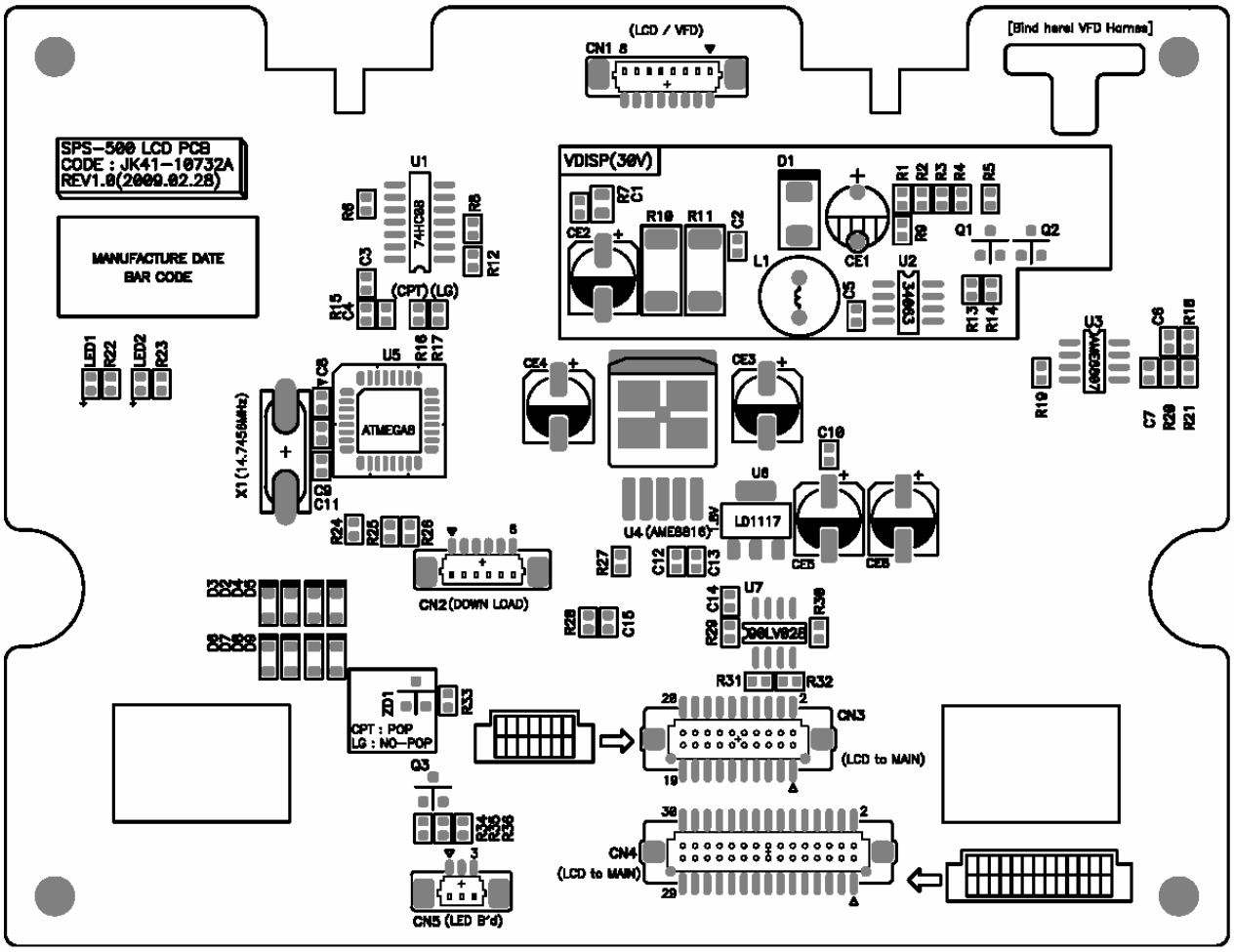

No	Part-No	Description / Specification	Q'TY	Design-location	Serviceable	Remark
-	**JK92-01613A**	**PBA LCD:SPS-500,STD**	**1**	**ASS'Y**	Y	
-	JC68-10564A	LABEL(P)-PROTECTOR:SLB-3108H,ART,-,100	1	MANUFACTURE DATE	N	
-	0403-000757	DIODE-ZENER:BZX84C3V3F,3.3V,300mW,SOT-23	1	ZD1	Y	
-	0404-001052	DIODE-SCHOTTKY:BAT43WS,BAT54WS,30V	8	D2-D9	Y	
-	0501-000457	TR-SMALL SIGNAL:MMBT2222A,NPN,350MW,SOT	1	Q3	Y	
-	0602-000001	LED;SSC-UR101,RED,1608,SMD	2	LED1,LED2	Y	
-	0801-000887	IC-CMOS LOGIC:74HCT08,AND GATE,SOP,14P	1	U1	Y	
-	0903-001170	IC-CPU:ATMEGA8-16AU,TQFP,32P	1	U5	Y	
-	1006-000301	IC-TRANSCEIVER;DS90LV028A,SOIC8,LVDS-TTL	1	U7	Y	
-	1203-001765	IC-REGULATOR;AME8807AEHAZ,SOP,8P	1	U3	Y	
-	1203-001766	IC-REGULATOR;AME8816AEDV-3.3V,TO-263-5	1	U4	Y	

8-4 LCD PCB

No	Part-No	Description / Specification	Q'TY	Design-location	Serviceable	Remark
-	1203-001772	IC-REGULATOR:SE1117-3.3V,SOT-223,4P	1	U6	Y	
-	2008-000008	R-CHIP:100 OHM,5%,1/10W,1608	4	R29-R32	N	
-	2008-000012	R-CHIP:200 OHM,5%,1/10W,1608	2	R35,R36	N	
-	2008-000016	R-CHIP:300 OHM,5%,1/10W,1608	1	R25	N	
-	2008-000028	R-CHIP:1.5KOHM,1%,1/10W,1608,1%	2	R22,R23	N	
-	2008-000037	R-CHIP:4.7KOHM,1%,1/10W,1608,1%	7	R12,R15,R18,R19,R24, R27,R34	N	
-	2008-000044	R-CHIP:10KOHM,1%,1/10W,1608,1%	5	R6,R8,R16,R26,R33	N	
-	2008-000046	R-CHIP:15KOHM,5%,1/10W,1608	1	R21	N	
-	2008-000054	R-CHIP:36KOHM,1%,1/10W,1608,1%	1	R20	N	
-	2008-000063	R-CHIP:100KOHM,5%,1/10W,1608	1	R28	N	
-	2204-000003	C-CERAMIC,CHIP:15pF,5%,50V,1608	2	C9,C11	N	
-	2204-000010	C-CERAMIC,CHIP:100pF,5%,50V,1608	1	C7	N	
-	2204-000018	C-CERAMIC,CHIP:1nF,10%,50V,X7R,1608	1	C13	N	
-	2204-000028	C-CERAMIC,CHIP:100nF,+80-20%,25V,Y5V,160	7	C3,C4,C8,C10,C12,C14, C15	N	
-	2204-000029	C-CERAMIC,CHIP:1uF,+80-20%,16V,Y5V,1608	1	C6	N	
-	2402-000168	C-AL,SMD:100uF,20%,16V,GP,TP,8.3x8.3x6.3	4	CE3-CE6	Y	
-	2801-003382	CRYSTAL-SMD:14.7456MHZ,SX-1,18pF	1	X1	Y	
-	3708-001405	CON-FFC:4P,1mm,VERTICAL,SMD,NO-ZIP	1	CN7	Y	
-	3708-001410	CON-FFC:40P,0.5mm,VERTICAL,SMD,ZIP	1	CN6	Y	
-	3711-000835	CON-HEADER:BOX,20P,2R,1.25MM,ST,SMD	1	CN3	Y	
-	3711-000839	CON-HEADER:BOX,30P,2R,1.25MM,ST,SMD	1	CN4	Y	
-	3711-004118	WAFER;BOX-HEADER,1R, 3P,1.25mm,SMD	1	CN5	Y	
-	3711-004121	WAFER;BOX-HEADER,1R, 6P,1.25mm,SMD	1	CN2	Y	
-	3711-004123	WAFER;BOX-HEADER,1R, 8P,1.25mm,SMD	1	CN1	Y	
-	JK41-10732A	PCB-LCD:SPS-500,FR-4,2L,T1.6	1	PCB	N	

8-5 SD & CONV & LED & USB PCB

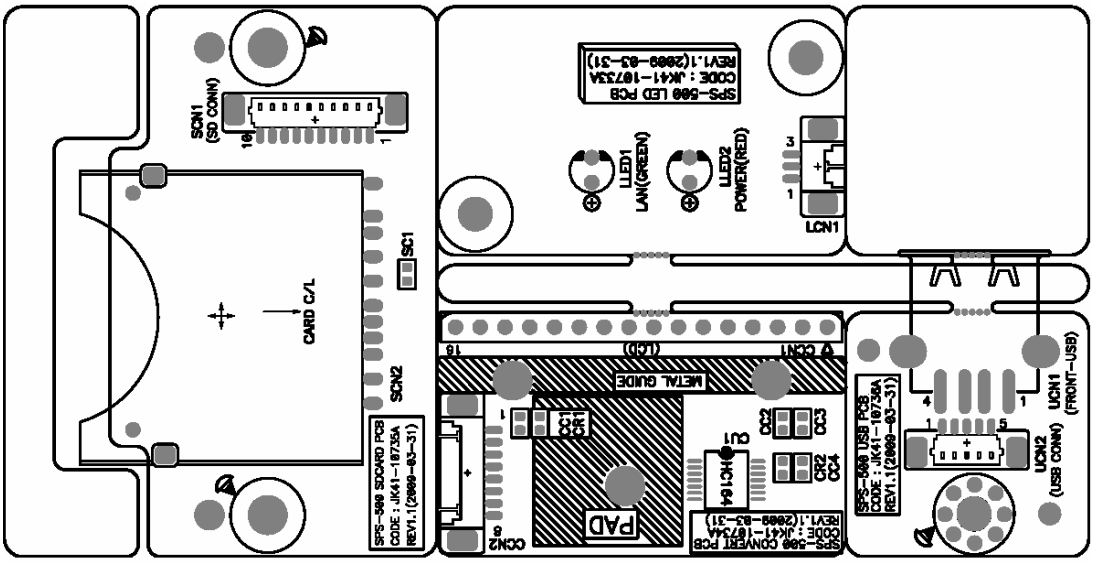

No	Part-No	Description / Specification	Q'TY	Design-location	Serviceable	Remark
-	**JK92-01614A**	**PBA SUB:SPS-500,SD,CONV,LED,USB B'D**	**1**	**ASS'Y**	Y	
-	0601-000270	LED;3PI,P100,DIP,ST,GREEN	1	LLED1	Y	
-	0601-000271	LED;3PI,P100,DIP,ST,RED	1	LLED2	Y	
-	3711-001480	CONN-HEADER:NOWALL,16P,1R,2.54mm,ST	1	CCN1	Y	
-	JK39-40752A	HARNESS-LED:3P,70mm,AT TAPE	1	LED HARNESS	Y	
-	JK39-40755A	HARNESS-USB:5P,200mm,AT TAPE	1	USB HARNESS	Y	
-	JK39-40756A	HARNESS-SD:10P,400mm,AT TAPE	1	SD HARNESS	Y	
-	JK70-20122A	IPR-BRKT SD;SECC T1.0	1		Y	
-	6001-000665	SCREW-MACHINE:PWH,+,M3,L4,ZPC(YEL),SM20	2	BRKT SD+SD B'D	Y	
-	0801-000490	IC-CMOS LOGIC:74HCT164,8bit SERIAL to PA	1	CU1	Y	
-	2008-000044	R-CHIP:10KOHM,1%,1/10W,1608,1%	1	CR1	N	
-	2008-000063	R-CHIP:100KOHM,5%,1/10W,1608	1	CR2	N	
-	2204-000004	C-CERAMIC,CHIP:22pF,5%,50V,1608	1	SC1	N	
-	2204-000029	C-CERAMIC,CHIP:1uF,+80-20%,16V,Y5V,1608	4	CC1-CC4	N	
-	3711-004125	WAFER;BOX-HEADER,1R,10P,1.25mm,SMD	1	SCN1	Y	
-	3711-004128	WAFER;BOX-HEADER,1R, 5P,1.25mm,SMD	1	UCN2	Y	
-	3711-004133	WAFER;BOX:1R,3P,1.25mm,AN,IVR,12505WR-03	1	LCN1	Y	
-	3711-004138	WAFER;BOX:1R,8P,1.25mm,AN,IVR,12505WR-08	1	CCN2	Y	
-	3712-000054	CONNECTOR-USB:A-TYPE,QBIG,4P,1R,AN,SMD	1	UCN1	Y	
-	3712-000060	CONNECTOR-SD CARD:SMD,12P,RoHS	1	SCN2	Y	
-	JK41-10735A	PCB-SD,CONV,LED,USB:SPS-500,FR-R,2L,T1.6	1	PCB	N	

8-5 SD & CONV & LED & USB PCB

[SD B'D]

No	Part-No	Description / Specification	Q'TY	Design-location	Serviceable	Remark
-	**JK92-01614B**	**PBA SUB:SPS-500,SD B'D,SVC**	**1**	**ASS'Y**	Y	
-	JK39-40756A	HARNESS-SD:10P,400mm,AT TAPE	1	SD HARNESS	Y	
-	JK70-20122A	IPR-BRKT SD;SECC T1.0	1		Y	
-	6001-000665	SCREW-MACHINE:PWH,+,M3,L4,ZPC(YEL),SM20	2	BRKT SD+SD B'D	Y	
-	2204-000004	C-CERAMIC,CHIP:22pF,5%,50V,1608	1	SC1	N	
-	3711-004125	WAFER;BOX-HEADER,1R,10P,1.25mm,SMD	1	SCN1	Y	
-	3712-000060	CONNECTOR-SD CARD:SMD,12P,RoHS	1	SCN2	Y	
-	JK41-10735A	PCB-SD,CONV,LED,USB:SPS-500,FR-R,2L,T1.6	1	PCB	N	

[CONV B'D]

No	Part-No	Description / Specification	Q'TY	Design-location	Serviceable	Remark
-	**JK92-01614C**	**PBA SUB:SPS-500,CONV B'D,SVC**	**1**	**ASS'Y**	Y	
-	3711-001480	CON-HEADER:NOWALL,16P,1R,2.54mm,ST	1	CCN1	Y	
-	0801-000490	IC-CMOS LOGIC:74HCT164,8bit SERIAL to PA	1	CU1	Y	
-	2008-000044	R-CHIP:10KOHM,1%,1/10W,1608,1%	1	CR1	N	
-	2008-000063	R-CHIP:100KOHM,5%,1/10W,1608	1	CR2	N	
-	2204-000029	C-CERAMIC,CHIP:1uF,+80-20%,16V,Y5V,1608	1	CC1-CC4	N	
-	3711-004138	WAFER;BOX:1R,8P,1.25mm,AN,IVR,12505WR-08	1	CCN2	Y	
-	JK41-10735A	PCB-SD,CONV,LED,USB:SPS-500,FR-R,2L,T1.6	1	PCB	N	

[LED B'D]

No	Part-No	Description / Specification	Q'TY	Design-location	Serviceable	Remark
-	**JK92-01614D**	**PBA SUB:SPS-500,LED B'D,SVC**	**1**	**ASS'Y**	Y	
-	0601-000270	LED;3PI,P100,DIP,ST,GREEN	1	LLED1	Y	
-	0601-000271	LED;3PI,P100,DIP,ST,RED	1	LLED2	Y	
-	JK39-40752A	HARNESS-LED:3P,70mm,AT TAPE	1	LED HARNESS	Y	
-	3711-004133	WAFER;BOX:1R,3P,1.25mm,AN,IVR,12505WR-03	1	LCN1	Y	
-	JK41-10735A	PCB-SD,CONV,LED,USB:SPS-500,FR-R,2L,T1.6	1	PCB	N	

[USB B'D]

No	Part-No	Description / Specification	Q'TY	Design-location	Serviceable	Remark
-	**JK92-01614E**	**PBA SUB:SPS-500,USB B'D,SVC**	**1**	**ASS'Y**	Y	
-	JK39-40755A	HARNESS-USB:5P,200mm,AT TAPE	1	USB HARNESS	Y	
-	3711-004128	WAFER;BOX-HEADER,1R, 5P,1.25mm,SMD	1	UCN2	Y	
-	3712-000054	CONNECTOR-USB:A-TYPE,QBIG,4P,1R,AN,SMD	1	UCN1	Y	
-	JK41-10735A	PCB-SD,CONV,LED,USB:SPS-500,FR-R,2L,T1.6	1	PCB	N	

8-6 SPS-520 JOINT(2inch) PCB

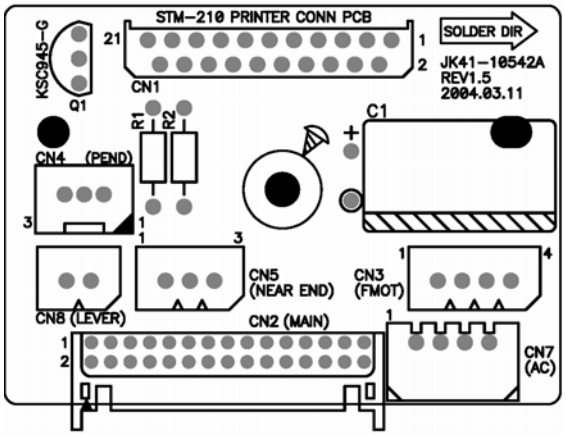

No	Part-No	Description / Specification	Q'TY	Design-location	Serviceable	Remark
-	**JK92-01224B**	**PBA SUB-PRT CONN BOARD:ELLIX15,STD**	**1**	**ASS'Y**	Y	
-	3708-001390	CONNECTOR-FPC:21P,1R,1.25mm,ST,WHITE	1	CN1 (TPH)	Y	
-	3711-001011	CON-HEADER:BOX,5P,1R,2.5mm,STRAIGH	1	CN6 (MOTOR)	Y	IVORY
-	3711-003969	CON-HEADER:BOX,2P,1R,2.5mm,STRAIGH	1	CN8 (LEVER SENSOR)	Y	IVORY
-	3711-003409	CON-HEADER:BOX,3P,1R,2mm,STRAIGHT	1	CN4 (P/END SENSOR)	Y	IVORY
-	3711-004059	CON-HEADER:BOX,30P,2R,2mm,AN,BLACK	1	CN2 (TO MAIN PBA)	Y	
-	3711-000965	CONNECTOR-HEADER:BOX,4P,1R,2.5mm,AN	1	CN7 (A/C)	Y	IVORY
-	3711-003968	CON-HEADER:BOX,3P,1R,2.5mm,STRAIGH	1	CN5 (N/PE SENSOR)	Y	IVORY
-	0501-000399	TR-SMALL SIGNAL:KSC945-G,NPN,250mW,TO-92	1	Q1	Y	
-	2001-000395	R-CARBON:180KOHM,5%,1/4W,AA,TP,2.4X6.0MM	1	R1	Y	
-	2001-000062	R-CARBON:470OHM,5%,1/4W,AA,TP,2.4X6.0MM	1	R2	Y	
-	JK41-10662A	PCB-CONNECTION:ELLIX15,FR-4,2L,T1.6mm	1	PCB	N	

[PAPER END SENSOR PCB]

No	Part-No	Description / Specification	Q'TY	Design-location	Serviceable	Remark
-	**JK96-01231A**	**ELA P/END SENSOR:STM-210,ER-650R**	**1**	**ASS'Y**	Y	
-	0604-000159	REFLECT-SENSOR:SG2BC,4P,KODENSHI,STM21	1		Y	
-	JK39-40552A	CBF HARNESS-PAPER END:STM-210,UL1061#26	1		Y	
-	JK41-10540A	PCB-P/END:STM-210,FR-4,2L,T1.6,142.5*130	1	PCB	N	

[NEAR PAPER END SENSOR PCB]

No	Part-No	Description / Specification	Q'TY	Design-location	Serviceable	Remark
-	**JK96-01232A**	**ELA NEAR P/END SENSOR:STM-210,ER-52XX**	**1**	**ASS'Y**	Y	
-	0604-000159	REFLECT-SENSOR:SG2BC,4P,KODENSHI,STM21	1		Y	
-	JK39-40553A	CBF HARNESS-N/PE SENSOR:STM-210,100MM	1		Y	
-	JK41-10541A	PCB-NEAR P/END:STM-210,FR-4,2L,T1.6mm	1	PCB	N	

8-7 SPS-530 JOINT(3inch) PCB

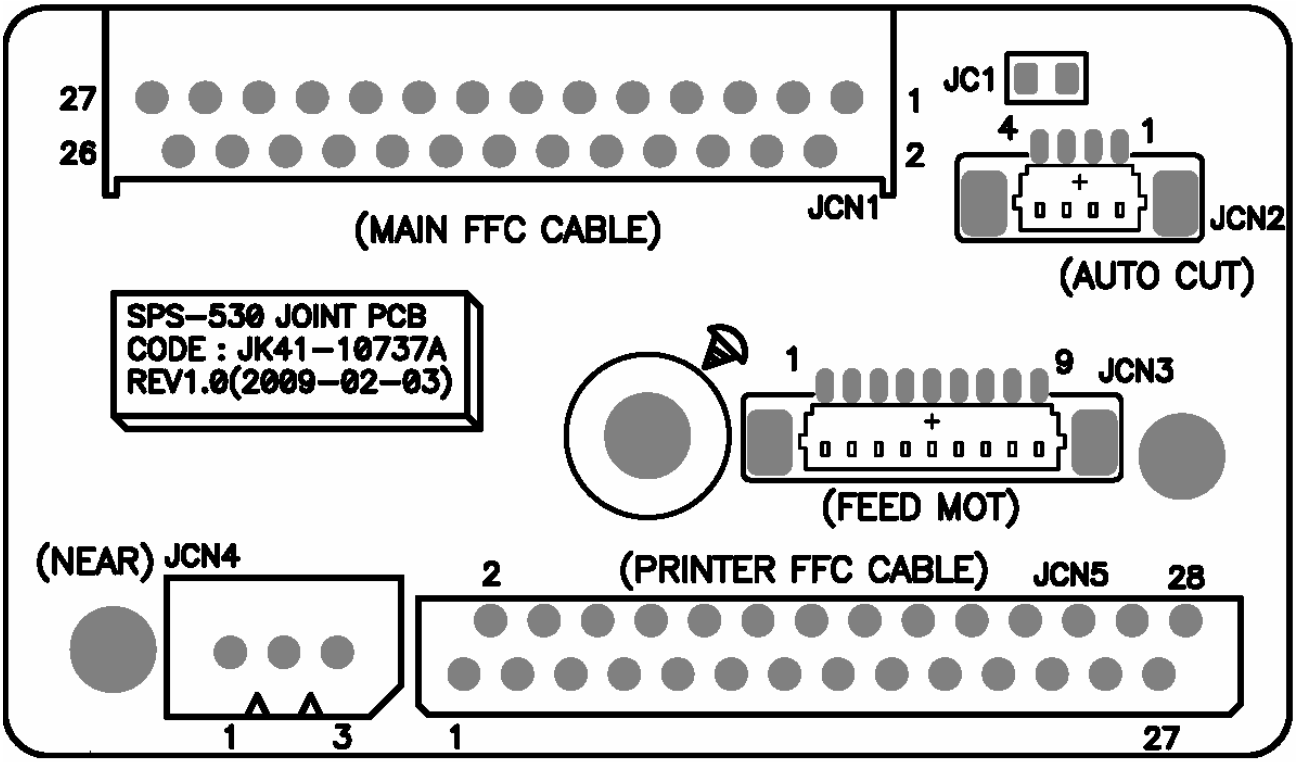

No	Part-No	Description / Specification	Q'TY	Design-location	Serviceable	Remark
-	**JK92-01617A**	**PBA SUB:SPS-530,JOINT B'D**	**1**	**ASS'Y**	Y	
-	3708-001388	CONNECTOR-FPC:28P,1R,1.25mm,ST,WHITE	1	JCN5	Y	
-	3708-001392	CONNECTOR-FPC:27P,1R,1.25mm,AN,BLACK	1	JCN1	Y	
-	3711-003968	CON-HEADER:BOX,3P,1R,2.5mm,STRAIGHT	1	JCN4	Y	
-	2204-000028	C-CERAMIC,CHIP:100nF,+80-20%,25V,Y5V,160	1	JC1	N	
-	3711-004119	WAFER;BOX-HEADER,1R, 4P,1.25mm,SMD,IVY	1	JCN2	Y	
-	3711-004124	WAFER;BOX-HEADER,1R, 9P,1.25mm,SMD	1	JCN3	Y	
-	JK41-10737A	PCB-PRT JOINT:SPS-530,FR-4,2L,T1.6	1	PCB	N	

MEMO

9 Wiring Diagram

9-1 Main PBA Block Diagram

[TOP SIDE]

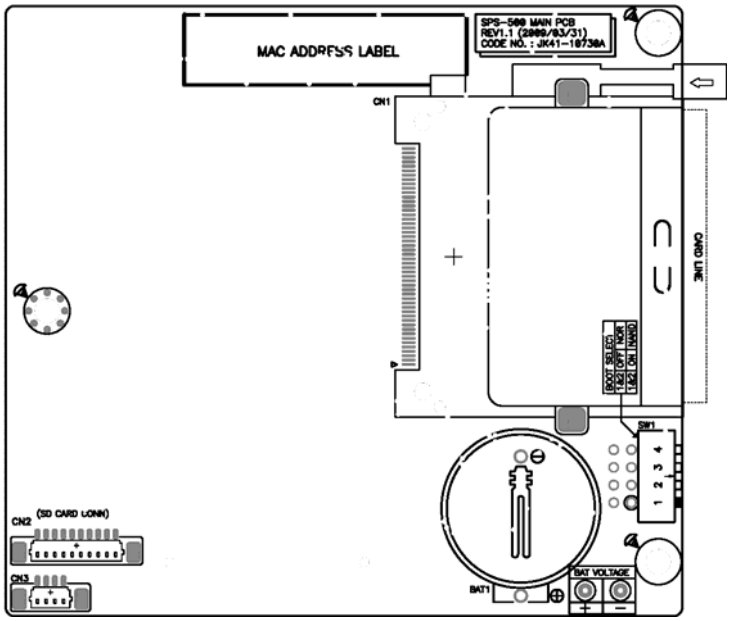

[BOTTOM SIDE]

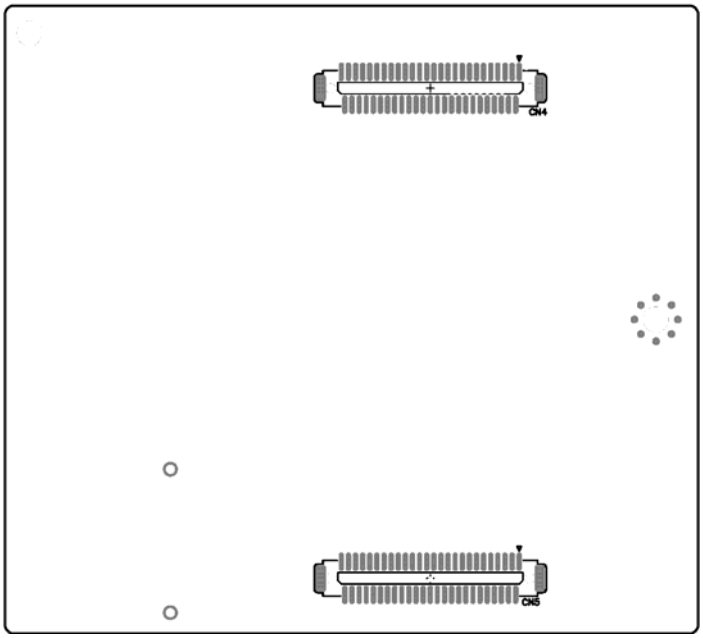

9-2 Main PBA Wiring connection

CN1 (SRAM CF CONNECTORT)

NO	SIGNAL NAME	NO	SIGNAL NAME
1	GND	26	CFCARD_DETECT
2	DATA8	27	DATA9
3	DATA10	28	DATA11
4	DATA12	29	DATA13
5	DATA14	30	DATA15
6	/WBE1	31	/WBE0
7	/RESET	32	ADDR21
8	/GCS1_SRAM#4	33	/GSC1_SRAM#3
9	/GCS1_SRAM#2	34	ADDR17
10	/WE	35	ADDR16
11	ADDR15	36	ADDR14
12	ADDR13	37	ADDR12
13	VDD(3.3V)	38	VDD(3.3V)
14	ADDR11	39	ADDR10
15	ADDR9	40	ADDR20
16	ADDR19	41	ADDR18
17	ADDR8	42	ADDR7
18	ADDR6	43	ADDR5
19	ADDR4	44	ADDR3
20	ADDR2	45	ADDR1
21	/OE	46	DATA0
22	DATA1	47	DATA2
23	DATA3	48	DATA4
24	DATA5	49	DATA6
25	DATA7	50	GND

CN2 (SD CARD CONNECTOR)

NO	SIGNAL NAME
1	GND
2	SDC_/CD
3	SDC_WP
4	SDC_DATA1
5	SDC_DATA0
6	SDC_CLK
7	VDD(3.3V)
8	SDC_CMD
9	SDC_DATA3
10	SDC_DATA2

CN3 (DIGUG PORT CONNECTOR)

NO	SIGNAL NAME
1	VDD(3.3V)
2	DEBUG_TXD
3	DEBUG_RXD
4	GND

CN4 (MAIN B'D to IO B'D CONNECTOR)

NO	SIGNAL NAME	NO	SIGNAL NAME
1	VDD(5.0V)	26	USB#1_D-
2	VDD(5.0V)	27	XCAM_Y3
3	SPI#0_CLK	28	USB#0_D-
4	VDD(5.0V)	29	XCAM_Y4
5	SPI#0_MISO	30	SUB#0_D+
6	SPI#0MOSI	31	XCAM_Y7
7	IRQ_SPI#0_PRT	32	PRTI_/RESET
8	COM#1_CTS	33	XCAM_Y1
9	XCAM_/RESET	34	IRQ_PFAIL
10	COM#2_TXD	35	XCAM_VSYNC
11	XCAM_RESET	36	COM#3_RXD
12	COM#2_RXD	37	XCAM_PCLK
13	XCAM_CLKOUT	38	COM#3_TXD
14	COM#1_RTS	39	XCAM_HSYNC
15	VDD(2.8V)	40	COM#3_RTS
16	COM#1_RXD	41	LANLED_LINK&ACT
17	VDD(2.8V)	42	COM3_CTS
18	COM#1_TXD	43	LANLED_SPEED
19	XACM_Y6	44	COM#4_TXD
20	COM#2_CTS	45	LAN_TX+
21	XCAM_Y0	46	COM#4_RXD
22	COM#2_RTS	47	LAN_TX-
23	XCAM_Y5	48	COM#4_RTS
24	USB#1_D+	49	LAN_RX+
25	XCAM_Y2	50	COM#4_CTS
		51	LAN_RX CTX-

CN5 (MAIN B'D to IO B'D CONNECTOR)

NO	SIGNAL NAME	NO	SIGNAL NAME
1	LCD_HSYNC	26	GND
2	LCD_PANELONOFF	27	VD7(BULE4)
3	LCD_VCLK	28	SPI#1_MISO
4	12C_SCLK	29	VD11(GREEN1)
5	GND	30	GND
6	12C_SDA	31	VD3(BLUE0)
7	LCD_VDEN	32	SPI#1_RESET
8	GND	33	VD5(BLUE2)
9	LCD_VSYNC	34	SPI#1_MOSI
10	GND	35	VD10(GREEN0)
11	GND	36	GND
12	GND	37	GND
13	CD13(GREEN3)	38	GND
14	GND	39	VD12(GREEN2)
15	VD19(RED0)	40	IRQ_SPI#1_UPPER
16	GND	41	VD6(BLUE3)
17	VD23(RED4)	42	GND
18	GND	43	VD14(GREEN4)
19	VD21(RED2)	44	TOUCH_YM
20	GND	45	VD15(GREEN5)
21	VD4(BLUE1)	46	TOUCH_YP
22	GND	47	VD20(RED1)
23	GND	48	TOUCH_XM
24	SPI#1CLK	49	VD22(RED22)
25	GND	50	TOUCH_XP
		51	GND

9-3 IO PBA Block Diagram

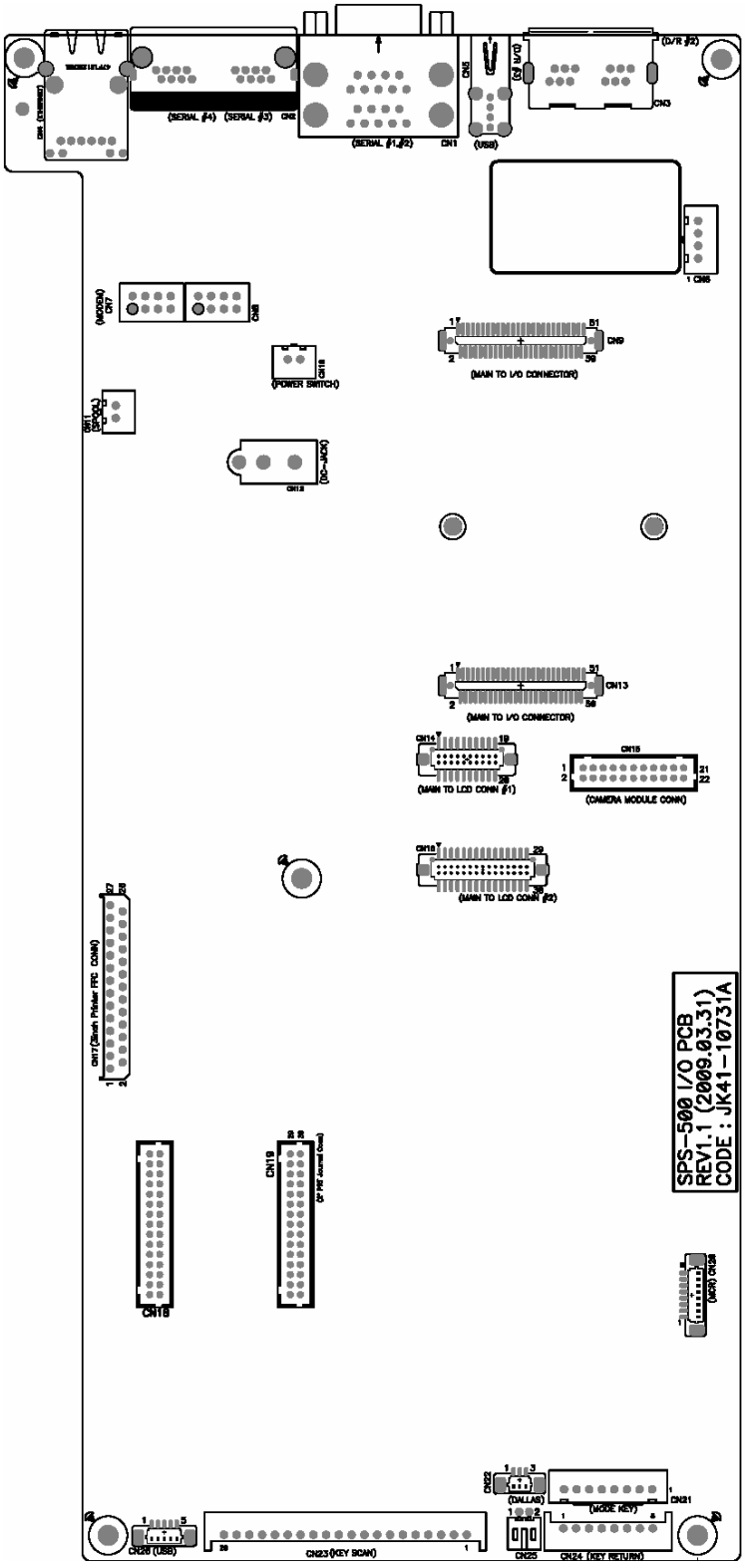

9-4 IO PBA Wiring connection

CN1 (SERIAL#1,#2 DSUB9PIN TYPE)

NO	SIGNAL NAME	NO	SIGNAL NAME
1	NC	10	NC
2	COM#1_RXD_IN	11	COM#2_RXD_IN
3	COM#1_TXD_OUT	12	COM#2_TXD_OUT
4	COM#1_RTS_OUT	13	COM#2_RTS_OUT
5	GND	14	GND
6	COM#1_CTS_IN	15	COM#2_CTS_IN
7	COM#1_RTS_OUT	16	COM#2_RTS_OUT
8	COM#1_CTS_IN	17	COM#2_CTS_IN
9	Vserial 5V	18	Vserial 5V

CN2 (SERIAL#3,#4 RJ-45 MODULAR TYPE)

NO	SIGNAL NAME	NO	SIGNAL NAME
1	COM#3_RTS_OUT	9	COM#3_RTS_OUT
2	GND	10	GND
3	COM#3_CTS_IN	11	COM#3_CTS_IN
4	COM#1_RTS_OUT	12	COM#1_RTS_OUT
5	COM#3_RXD_IN	13	COM#3_RXD_IN
6	COM#3_TXD_OUT	14	COM#3_TXD_OUT
7	COM#3_CTS_IN	15	COM#3_CTS_IN
8	Vserial 5V	16	Vserial 5V

CN3 (DRAWER#2,#3 RJ-11 MODULAR TYPE)

NO	SIGNAL NAME	NO	SIGNAL NAME
1	GND	7	GND
2	DRAWER#3_OUT	8	DRAWER#2_OUT
3	SENSOR_DWRCOMP#3_IN	9	SENSOR_DWRCOMP#2_IN
4	+24V	10	+24V
5	DRAWER#3_OUT	11	DRAWER#2_OUT
6	GND	12	GND

CN4 (ETHERNET RJ-45 MODULAR TYPE)

NO	SIGNAL NAME	NO	SIGNAL NAME
1	LAN_TX CT	6	LAN_RX CT
2	LAN_TX+	7	LANLED_SPEED
3	LAN_TX-	8	VDD(5V)
4	LAN_RX+	9	LANLED_LINK&ACT
5	LAN_RX-	10	VDD(5V)

CN5 (USB#1)

NO	SIGNAL NAME	NO	SIGNAL NAME
1	Vserial V5	3	USB#1_DATA-
2	USB#1_ DATA+	4	GND

CN6 (DRAWER#1 4P BOX TYPE)

NO	SIGNAL NAME	NO	SIGNAL NAME
1	GND	3	DRAWER#1_OUT
2	SENSOR_DWRCOMP#1_IN	4	+24V

CN7 (MODEM 8P BOX TYPE)

NO	SIGNAL NAME	NO	SIGNAL NAME
1	MODEM_RXD(3.3V)	5	IRQ_MODEM(3.3V)
2	MODEM_TXD(3.3V)	6	MODEM_RESET(3.3V)
3	MODEM_CTS(3.3V)	7	NC
4	NC	8	MODEM_RELAY_ONOFF(5V)

CN8 (MODEM 8P BOX TYPE)

NO	SIGNAL NAME	NO	SIGNAL NAME
1	VDD(3.3V)	5	GND
2	VDD(5V)	6	GND
3	VDD(3.3V)	7	GND
4	VDD(5V)	8	GND

CN9 (I/O B'D to MAIN B'D CONNECTOR)

NO	SIGNAL NAME	NO	SIGNAL NAME
1	VDD(5.0V)	26	USB#1_D-
2	VDD(5.0V)	27	XCAM_Y3
3	SPI#0_CLK	28	USB#0_D-
4	VDD(5.0V)	29	XCAM_Y4
5	SPI#0_MISO	30	SUB#0_D+
6	SPI#0MOSI	31	XCAM_Y7
7	IRQ_SPI#0_PRT	32	PRTI_/RESET
8	COM#1_CTS	33	XCAM_Y1
9	XCAM_/RESET	34	IRQ_PFAIL
10	COM#2_TXD	35	XCAM_VSYNC
11	XCAM_RESET	36	COM#3_RXD
12	COM#2_RXD	37	XCAM_PCLK
13	XCAM_CLKOUT	38	COM#3_TXD
14	COM#1_RTS	39	XCAM_HSYNC
15	VDD(2.8V)	40	COM#3_RTS
16	COM#1_RXD	41	LANLED_LINK&ACT
17	VDD(2.8V)	42	COM3_CTS
18	COM#1_TXD	43	LANLED_SPEED
19	XACM_Y6	44	COM#4_TXD
20	COM#2_CTS	45	LAN_TX+
21	XCAM_Y0	46	COM#4_RXD
22	COM#2_RTS	47	LAN_TX-
23	XCAM_Y5	48	COM#4_RTS
24	USB#1_D+	49	LAN_RX+
25	XCAM_Y2	50	COM#4_CTS
		51	LAN_RX CTX-

CN10 (POWER SWITCH 2P BOX TYPE)

NO	SIGNAL NAME	NO	SIGNAL NAME
1	POWER-	2	POWER+

CN11 (SPOOL 2P BOX TYPE)

NO	SIGNAL NAME	NO	SIGNAL NAME
1	SPOOL_MOTOUT	2	+24V

CN12 (POWER CON 2P BOX TYPE)

NO	SIGNAL NAME	NO	SIGNAL NAME
1	GND	2	+24V

9-4 IO PBA Wiring connection

CN13 (IO B'D to MAIN B'D CONNECTOR)

NO	SIGNAL NAME	NO	SIGNAL NAME
1	LCD_HSYNC	26	GND
2	LCD_PANELONOFF	27	VD7(BULE4)
3	LCD_VCLK	28	SPI#1_MISO
4	12C_SCLK	29	VD11(GREEN1)
5	GND	30	GND
6	12C_SDA	31	VD3(BLUE0)
7	LCD_VDEN	32	SPI#1_RESET
8	GND	33	VD5(BLUE2)
9	LCD_VSYNC	34	SPI#1_MOSI
10	GND	35	VD10(GREEN0)
11	GND	36	GND
12	GND	37	GND
13	CD13(GREEN3)	38	GND
14	GND	39	VD12(GREEN2)
15	VD19(RED0)	40	IRQ_SPI#1_UPPER
16	GND	41	VD6(BLUE3)
17	VD23(RED4)	42	GND
18	GND	43	VD14(GREEN4)
19	VD21(RED2)	44	TOUCH_YM
20	GND	45	VD15(GREEN5)
21	VD4(BLUE1)	46	TOUCH_YP
22	GND	47	VD20(RED1)
23	GND	48	TOUCH_XM
24	SPI#1CLK	49	VD22(RED22)
25	GND	50	TOUCH_XP
		51	GND

CN14 (IO B'D to LCD B'D CONNECTOR 20PIN BOX TYPE)

NO	SIGNAL NAME	NO	SIGNAL NAME
1	VDD(5V)	11	LCD_PANELONOFF
2	LVDS_LCD_VDEN-	12	SPI#1_CLK(5V)
3	VDD(5V)	13	TOUCH_XP
4	LVDS_LCD_VDEN+	14	SPI#1_RESET(5V)
5	VDD(5V)	15	TOUCH_XM
6	LVDS_LCD_VCAL+	16	SPI#1_MISO(5V)
7	/RESET_MICOM	17	TOUCH_YP
8	LVDS_LCD_VCAL-	18	SPI#1_MOSI(5V)
9	PFAIL_5V	19	TOUCH_YM
10	GND	20	GND

CN15 (CAMERA MODULE CONNECTOR 22PIN BOX TYPE)

NO	SIGNAL NAME	NO	SIGNAL NAME
1	VDD(3.3V)	12	XCAM_Y5
2	NC	13	XCAM_Y2
3	GND	14	XCAM_Y3
4	GND	15	XCAM_Y4
5	RTC_SDA	16	XCAM_Y7
6	RTC_SCLK	17	XCAM_Y1
7	XCAM_/RESET	18	XCAM_VSYNC
8	XCAM_RESET	19	XCAM_PCLK
9	XCAM_CAKOUT	20	XCAM_HSYNC
10	XCAM_Y6	21	VDD(2.8V)
11	XCAM_Y0	22	VDD(5V)

CN16 (IO B'D to LCD B'D CONNECTOR 30PIN BOX TYPE)

NO	SIGNAL NAME	NO	SIGNAL NAME
1	LCD_VD6(BLUE3)	16	GND
2	GND	17	LCD_VD15(GREEN5)
3	LCD_VD3(BLUE0)	18	GND
4	GND	19	LCD_VD13(GREEN3)
5	LCD_VD14(GREEN4)	20	GND
6	GND	21	LCD_VD12(GREEN2)
7	LCD_VD11(GREEN1)	22	GND
8	GND	23	LCD_VD23(RED4)
9	LCD_VD22(RED3)	24	GND
10	GND	25	LCD_VD21(RED2)
11	LCD_VD7(BLUE4)	26	GND
12	GND	27	LCD_VD20(RED1)
13	LCD_VD5(BLUE2)	28	GND
14	GND	29	LCD_VD19(RED0)
15	LCD_VD4(BLUE1)	30	GND

CN17 (3inch PRT FFC CONNECTOR 27PIN TYPE)

NO	SIGNAL NAME	NO	SIGNAL NAME
1	AUTO-CUT HOME SEN_OUT	15	TPH_STROBE #3,#4
2	AUTO-CUT MOT DRIVE /A	16	VDD(5V)
3	AUTO-CUT MOT DRIVE A	17	THERMISTER
4	GND	18	THP_STROBE #1,#2
5	NEAR PAPER SEN_OUT	19	THP_DATA_LATCH
6	COVER OPEN SEN_OUT	20	THP_CLK
7	PAPER END SEN_OUT	21	DISCON & SELECTION
8	PAPER END LED POWER+	22	GND
9	FEED MOT DRIVE_/B	23	GND
10	FEED MOT DRIVE_B	24	VPH +24V
11	FEED MOT DRIVE_/A	25	VPH +24V
12	FEED MOT DRIVE_A	26	VPH +24V
13	GND	27	VPH +24V
14	TPH_DATA		

CN18 (2inch RECEIPT PRT CONNECTOR 30PIN BOX TYPE)

NO	SIGNAL NAME	NO	SIGNAL NAME
1	VDD(5V)	16	TPH_DATA
2	COVER OPEN SEN_OUT	17	
3	PAPER END LED-	18	GND
4	PAPER END SEN_OUT	19	GND
5	NEAR PAPER LED -	20	VPH +24V
6	NEAR PAPER SNE_OUT	21	VPH +24V
7	FEED MOT COMMON	22	VPH +24V
8	DISCON & SELECTION	23	GND
9	THERMISTER	24	FEED MOT DRIVE /B
10	GND	25	AUTO-CUT HOME SEN_OUT
11	TPH_STROBE #3,#4	26	FEED MOT DRIVE B
12	TPH_CLK	27	AUTO-CUT MOT DRIVE /A
13	GND	28	FEED MOT DRIVE /A
14	GND	29	AUTO-CUT MOT DRIVE A
15	TPH_STROBE #1,#2	30	FEED MOT DRIVE A

CN19 (2inch JOURNAL PRT CONNECTOR 30PIN BOX TYPE)

NO	SIGNAL NAME	NO	SIGNAL NAME
1	VDD(5V)	16	TPH_DATA
2	COVER OPEN SEN_OUT	17	
3	PAPER END LED-	18	GND
4	PAPER END SEN_OUT	19	GND
5	NEAR PAPER LED -	20	VPH +24V
6	NEAR PAPER SNE_OUT	21	VPH +24V
7	FEED MOT COMMON	22	VPH +24V
8	NC	23	GND
9	THERMISTER	24	FEED MOT DRIVE /B
10	GND	25	NC
11	TPH_STROBE #3,#4	26	FEED MOT DRIVE B
12	TPH_CLK	27	NC
13	GND	28	FEED MOT DRIVE /A
14	GND	29	NC
15	TPH_STROBE #1,#2	30	FEED MOT DRIVE A

9-4 IO PBA Wiring connection

CN20 (MSR CONNECTOR 8PIN BOX TYPE)

NO	SIGNAL NAME	NO	SIGNAL NAME
1	NC	5	MCR_RDD2 (2TRACK DATA)
2	MCR_RCP3 (3TRACK CLOCK)	6	MCR_CPD23 (CARD DETCTION)
3	MCR_RDD3 (3TRACK DATA)	7	GND
4	MCR_RCP2 (2TRACK CLOCK)	8	VDD(5V)

CN21 (MODE KEY CONNECTOR 8PIN BOX TYPE)

NO	SIGNAL NAME	NO	SIGNAL NAME
1	MODEKEY_COMMON	5	DATA 3
2	DATA 0	6	DATA 4
3	DATA 1	7	DATA 5
4	DATA 2	8	DATA 6

CN22 (DALLAS CONNECTOR 3PIN BOX TYPE)

NO	SIGNAL NAME	NO	SIGNAL NAME
1	DALLAS_SIGNAL	3	GND
2	NC		

CN25 (ADDMAT KEY CONNECTOR 3PIN BOX TYPE)

NO	SIGNAL NAME	NO	SIGNAL NAME
1	DALLAS_SIGNAL	2	GND

CN26 (USB#0 CONNECTOR 5PIN BOX TYPE)

NO	SIGNAL NAME	NO	SIGNAL NAME
1	Vserial 5V	4	GND
2	USB#0_DATA-	5	GND
3	USB#0_DATA+		

CN23 (KEY BOARD FFC CONNECTOR 20PIN)
-> KEY SCAN LINE

CN24 (KEY BOARD FFC CONNECTOR 8PIN)
-> KEY RETURN LINE

9-5 LCD PBA Block Diagram

[TOP SIDE]

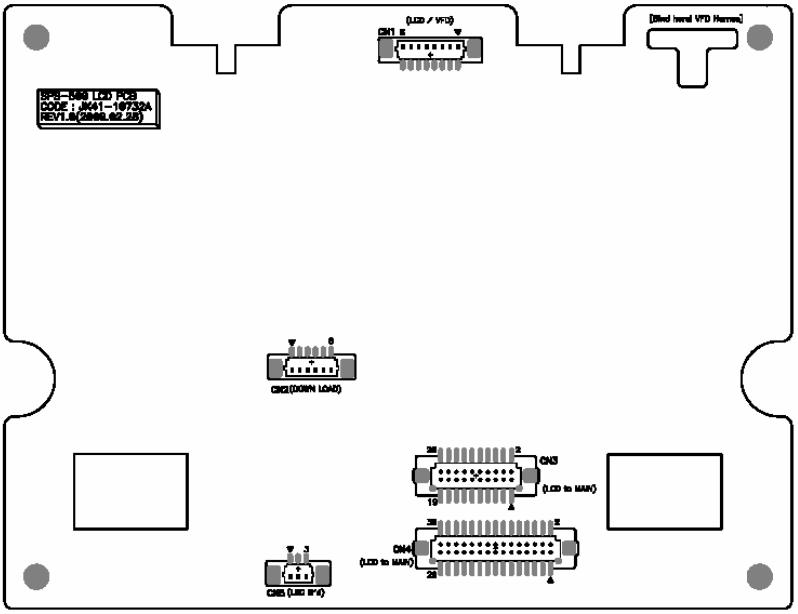

[BOTTOM SIDE]

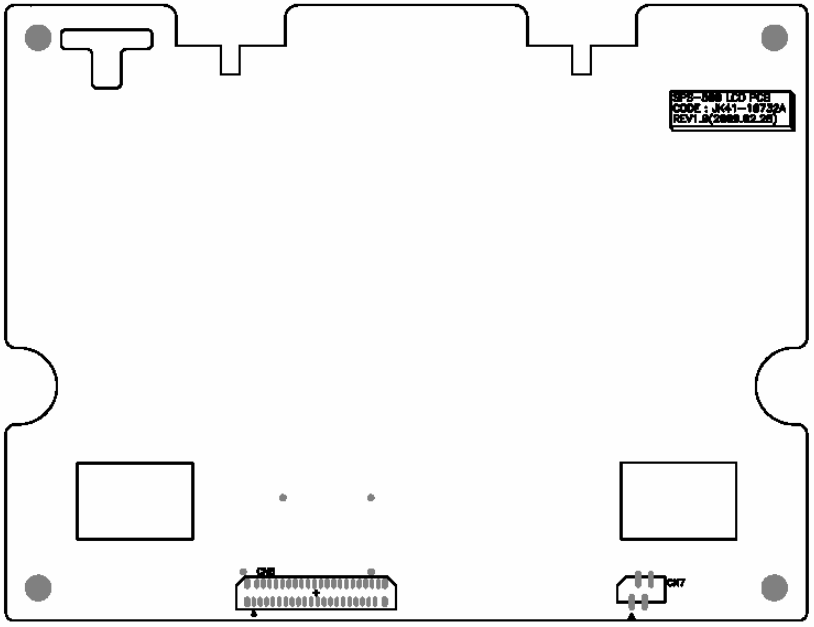

9-6 LCD PBA Wiring connection

CN1 (2LINE LCD & VFD CONNECTOR 8PIN BOX TYPE)

NO	SIGNAL NAME	NO	SIGNAL NAME
1	VDD(5V)	5	LCD_EN
2	LCD_SCLK	6	LCD&VFD_MODECHK
3	LCD_SDAT	7	GND
4	LCD_D/I	8	LCD_BLVOLT(4.2V)

CN2 (DOWNLOAD CONNECTOR 6PIN BOX TYPE)

NO	SIGNAL NAME	NO	SIGNAL NAME
1	VDD(5V)	4	SPI#1_CLK(PC)
2	SPI#1_MISO(5V)	5	SPI#1_MOSI(PC)
3	/RESET_PC	6	GND

CN3 (LCD B'D to IO B'D CONNECTOR 20PIN BOX TYPE)

NO	SIGNAL NAME	NO	SIGNAL NAME
1	VDD(5V)	11	LCD_PANELONOFF
2	LVDS_LCD_VDEN-	12	SPI#1_CLK(5V)
3	VDD(5V)	13	TOUCH_XP
4	LVDS_LCD_VDEN+	14	SPI#1_RESET(5V)
5	VDD(5V)	15	TOUCH_XM
6	LVDS_LCD_VCAL+	16	SPI#1_MISO(5V)
7	/RESET_MICOM	17	TOUCH_YP
8	LVDS_LCD_VCAL-	18	SPI#1_MOSI(5V)
9	PFAIL_5V	19	TOUCH_YM
10	GND	20	GND

CN4 (LCD B'D to IO B'D CONNECTOR 30PIN BOX TYPE)

NO	SIGNAL NAME	NO	SIGNAL NAME
1	LCD_VD6(BLUE3)	16	GND
2	GND	17	LCD_VD15(GREEN5)
3	LCD_VD3(BLUE0)	18	GND
4	GND	19	LCD_VD13(GREEN3)
5	LCD_VD14(GREEN4)	20	GND
6	GND	21	LCD_VD12(GREEN2)
7	LCD_VD11(GREEN1)	22	GND
8	GND	23	LCD_VD23(RED4)
9	LCD_VD22(RED3)	24	GND
10	GND	25	LCD_VD21(RED2)
11	LCD_VD7(BLUE4)	26	GND
12	GND	27	LCD_VD20(RED1)
13	LCD_VD5(BLUE2)	28	GND
14	GND	29	LCD_VD19(RED0)
15	LCD_VD4(BLUE1)	30	GND

CN5 (LED CONNECTOR 3PIN BOX TYPE)

NO	SIGNAL NAME	NO	SIGNAL NAME
1	LAN_LED-	3	VDD(5V)
2	POW_LED-		

CN6 (LCD FFC CONNECTOR 40PIN)

NO	SIGNAL NAME	NO	SIGNAL NAME
1	GND	21	LCD_VD15(GREEN5)
2	GND	22	LCD_VD14(GREEN4)
3	BRIGHTNESS CONTROL	23	LCD_VD13(GREEN3)
4	VLED (5V)	24	GND
5	VLED (5V)	25	LCD_VD12(GREEN2)
6	VLED (5V)	26	LCD_VD11(GREEN1)
7	VLED (3.3V)	27	LCD_VD11(GREEN1)
8	VLED (3.3V)	28	GND
9	DATA ENABLE	29	LCD_VD23(RED4)
10	GND	30	LCD_VD22(RED3)
11	GND	31	LCD_VD21(RED2)
12	GND	32	GND
13	LCD_VD7(BLUE4)	33	LCD_VD20(RED1)
14	LCD_VD6(BLUE3)	34	LCD_VD19(RED0)
15	LCD_VD5(BLUE2)	35	LCD_VD19(RED0)
16	GND	36	GND
17	LCD_VD4(BLUE1)	37	GND
18	LCD_VD3(BLUE0)	38	LCD_VCLK
19	LCD_VD3(BLUE0)	39	GND
20	GND	40	GND

CN7 (LCD TOUCH FFC CONNECTOR 4PIN)

NO	SIGNAL NAME	NO	SIGNAL NAME
1	TOCUH_XM	3	TOUCH_XP
2	TOUCH_YP	4	TOUCH_YM

9-7 SD & LED & CONVERT & USB PBA Block Diagram

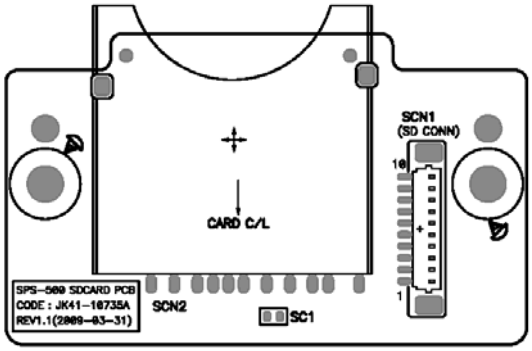

SCN1 (SD B'D CONNECTOR 10P)

NO	SIGNAL NAME
1	GND
2	SDC_/CD
3	SDC_WP
4	SDC_DATA1
5	SDC_DATA0
6	SDC_CLK
7	VDD(3.3V)
8	SDC_CMD
9	SDC_DATA3
10	SDC_DATA2

SCN2 (SD CARD 10P)

NO	SIGNAL NAME
1	SDC_DATA3(SD)
2	SDC_CMD(SD)
3	GND(SD)
4	VDD_3.3V(SD)
5	SDC_CLK(SD)
6	GND(SD)
7	VDD(3.3V)
8	SDC_CMD
9	SDC_DATA3
10	SDC_DATA2

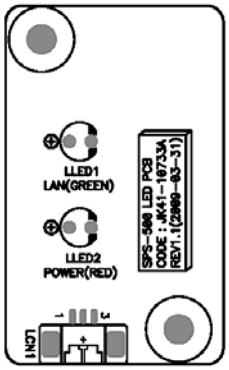

LCN1 (LED B'D CONNECTOR 10P)

NO	SIGNAL NAME
1	GND
2	SDC_/CD
3	SDC_WP

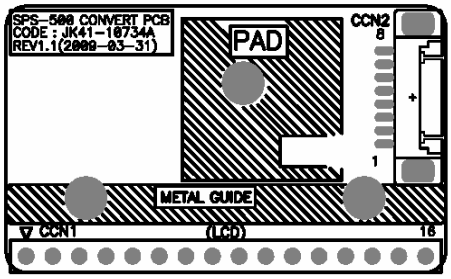

CCN1 (CONVERT B'D to LCD 16PIN NO-WALL TYPE)

NO	SIGNAL NAME	NO	SIGNAL NAME
1	GND	9	LCD_DATA1
2	BLVOLT(4.2V)	10	LCD_DATA0
3	LCD_DATA7	11	LCD_EN
4	LCD_DATA6	12	GND
5	LCD_DATA5	13	LCD_D/I
6	LCD_DATA4	14	GND
7	LCD_DATA3	15	VDD(5V)
8	LCD_DATA2	16	GND

CCN2 (LCD B'D CONNECTOR 8P)

NO	SIGNAL NAME
1	VDD(5V)
2	LCD_SCLK
3	LCD_SDAT
4	LCD_D/I
5	LCD_EN
6	DISCONNECTION
7	GND
8	BLVOT(4.2V)

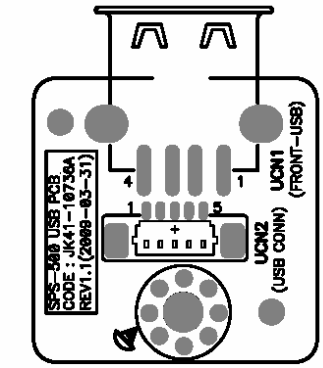

UCN1 (USB CONNECTOR 4P)

NO	SIGNAL NAME
1	Vserial 5V
2	USB#0_DATA-
3	USB#0_DATA+
4	GND

UCN2 (LCD B'D CONNECTOR 8P)

NO	SIGNAL NAME
1	GND
2	GND
3	USB#0_DATA+
4	USB#0_DATA-
5	Vserial 5V

9-8 JOINT(3inch PRT) PBA Block Diagram

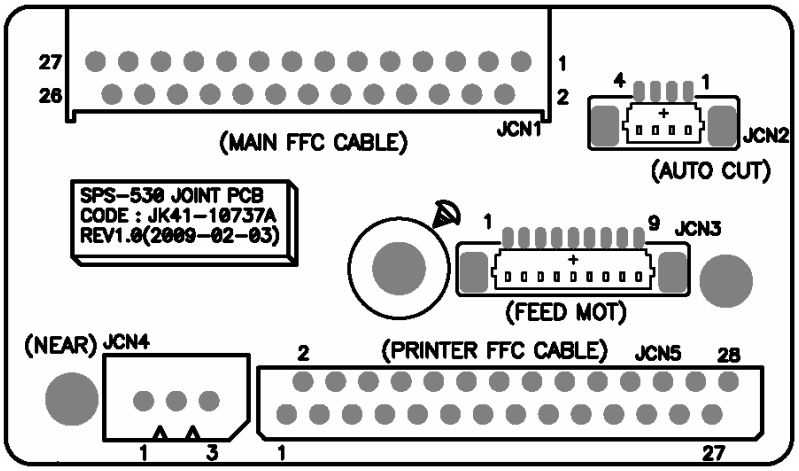

JCN1 (3inch FFC CONNECTOR 27PIN TYPE)

NO	SIGNAL NAME	NO	SIGNAL NAME
1	AUTO-CUT HOME SEN_OUT	15	TPH_STROBE #3,#4
2	AUTO-CUT MOT DRIVE /A	16	VDD(5V)
3	AUTO-CUT MOT DRIVE A	17	THERMISTER
4	GND	18	THP_STROBE #1,#2
5	NEAR PAPER SEN_OUT	19	THP_DATA_LATCH
6	COVER OPEN SEN_OUT	20	THP_CLK
7	PAPER END SEN_OUT	21	DISCON & SELECTION
8	PAPER END LED POWER+	22	GND
9	FEED MOT DRIVE_/B	23	GND
10	FEED MOT DRIVE_B	24	VPH +24V
11	FEED MOT DRIVE_/A	25	VPH +24V
12	FEED MOT DRIVE_A	26	VPH +24V
13	GND	27	VPH +24V
14	TPH_DATA	-	-

JCN2 (AUTO-CUT CONNECTOR 4P)

NO	SIGNAL NAME
1	AC_MOT_A
2	AC_MOT_/A
3	3INCH_ACSW_SNE
4	GND

JCN4 (NEAR PAPER CONNECTOR 3P)

NO	SIGNAL NAME
1	VDD(5V)
2	3INCH_NEAR_SEN
3	NEAR_LED_CATHODE

CN3 (3INCH FEED MOT CONNECTOR 9PIN)

NO	SIGNAL NAME	NO	SIGNAL NAME
1	3INCH_MOT_B	6	3INCH_PEND_SEN
2	3INCH_MOT_A	7	GND
3	3INCH_MOT_/B	8	GND
4	3INCH_MOT_/A	9	3INCH_COVER_SEN
5	PEND_LED_ANOIDE		

JCN5 (3inch TPH FFC CONNECTOR 28PIN TYPE)

NO	SIGNAL NAME	NO	SIGNAL NAME
1	TPH +24V	15	GND
2	TPH +24V	16	GND
3	TPH +24V	17	GND
4	TPH +24V	18	GND
5	NC	19	GND
6	TPH_CLK	20	GND
7	TPH_LATCH	21	VDD(5V)
8	TPH_STB#1,#2	22	TPH_STB#3,#4
9	TPH_STB#1,#2	23	TPH_STB#3,#4
10	THERMISTER	24	TPH_DATA
11	GND	25	TPH +24V
12	GND	26	TPH +24V
13	GND	27	TPH +24V
14	GND	28	TPH +24V

9-9 SRAM (CF TYPE) PBA Block Diagram

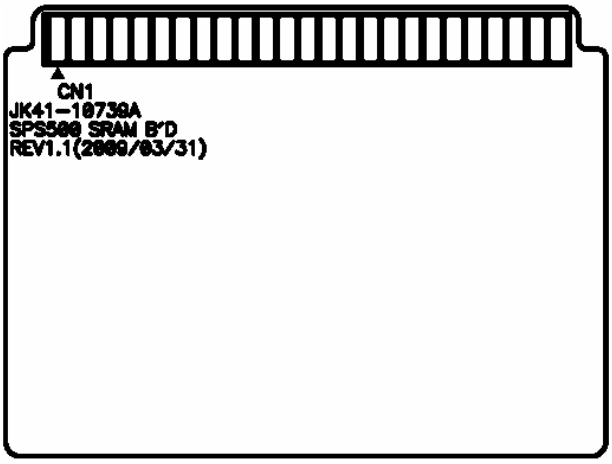

CN1 (SRAM B'D CF CONNECTOR 50PIN)

NO	SIGNAL NAME	NO	SIGNAL NAME
1	GND	26	DISCONNECTION
2	DATA8	27	DATA9
3	DATA10	28	DATA11
4	DATA12	29	DATA13
5	DATA14	30	DATA15
6	/WBE1	31	/WBE0
7	/RESET	32	/ADDR21
8	/GCS1_SRAM#4	33	/GCS1_SRAM#3
9	/GCS1_SRAM#1	34	ADDR17
10	/WE	35	ADDR16
11	ADDR15	36	ADDR14
12	ADDR13	37	ADDR12
13	VBT3.3V	38	VBT3.3V
14	ADDR11	39	ADDR10
15	ADDR9	40	ADDR20
16	ADDR19	41	ADDR18
17	ADDR8	42	ADDR7
18	ADDR6	43	ADDR5
19	ADDR4	44	ADDR3
20	ADDR2	45	ADDR1
21	/OE	46	DATA0
22	DATA1	47	DATA2
23	DATA3	48	DATA4
24	DATA5	49	DATA6
25	DATA7	50	GND

9-10 JOINT(2inch PRT) PBA Block Diagram

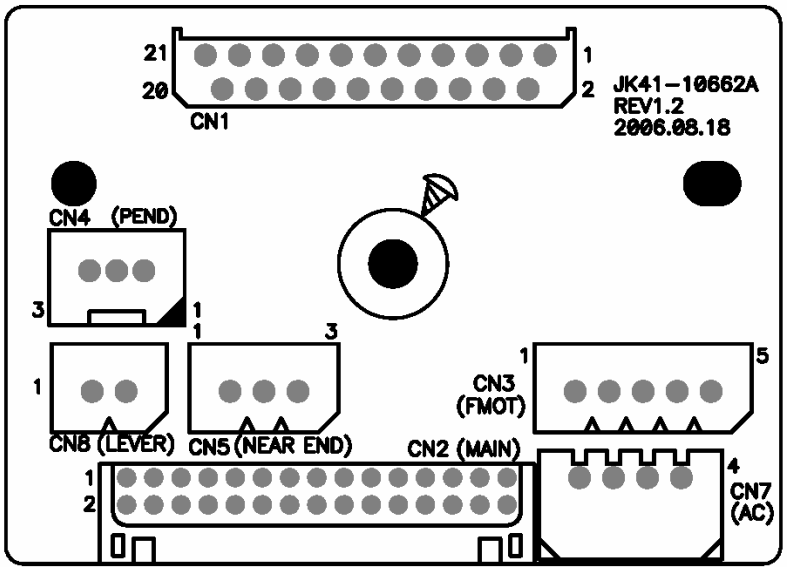

CN1 (2inch TPH FFC CONNECTOR 21PIN)

NO	SIGNAL NAME	NO	SIGNAL NAME
1	VPH +24V	12	TPH_CLK
2	VPH +24V	13	TPH_LATCH
3	VPH +24V	14	TPH_DATA
4	GND	15	GND
5	GND	16	GND
6	GND	17	GND
7	GND	18	VPH +24V
8	THERMISTOR	19	VPH +24V
9	VCC(5V)	20	VPH +24V
10	TPH_STROBE#1,#2	21	VPH +24V
11	TPH_STROBE#3,#4		

CN2 (2inch JOINT PRT CONNECTOR 30PIN BOX TYPE)

NO	SIGNAL NAME	NO	SIGNAL NAME
1	LEVER_SENS	16	TPH_SRTOBE#1,#2
2	VCC(5V)	17	VCC(5V)
3	PAPEREND_SENS	18	TPH_LATCH
4	PAPEREND_LED	19	VPH +24V
5	NEAREND_SENS	20	GND
6	NEAREND_LED	21	VPH +24V
7	DISCONNECTION	22	VPH +24V
8	MOT_COMMON	23	FEED_MOT_/B
9	GND	24	GND
10	THERMISTOR	25	FEED_MOT_/B
11	TPH_CLK	26	AUTOCUT_SENS
12	TPH_SRTOBE#3,#4	27	FEED_MOT_/B
13	GND	28	AUTOCUT_MOT_/A
14	GND	29	FEED_MOT_/B
15	TPH_DATA	30	AUTOCUT_MOT_A

CN7 (AUTO-CUT CONNECTOR 4P)

NO	SIGNAL NAME
1	AUTOCUT_MOT_A
2	AUTOCUT_MOT_/A
3	AUTOCUT_SENS
4	GND

CN4 (PAPER END CONNECTOR 3P)

NO	SIGNAL NAME
1	VCC(5V)
2	PAPER END_SENS
3	PAPER END_LED

CN5 (NEAR PAPER CONNECTOR 3P)

NO	SIGNAL NAME
1	VCC(5V)
2	NEAREND_SENS
3	NESREND_LED

CN3 (FEED MOT CONNECTOR 3P)

NO	SIGNAL NAME
1	FEED_MOT_/B
2	FEED_MOT_B
3	FEED_MOT_/A
4	FEED_MOT_/A
5	MOT_COMMON

CN8 (LEVER OPEN CONNECTOR 2P)

NO	SIGNAL NAME
1	LEVER_SENS
2	GND

10 Block Diagram

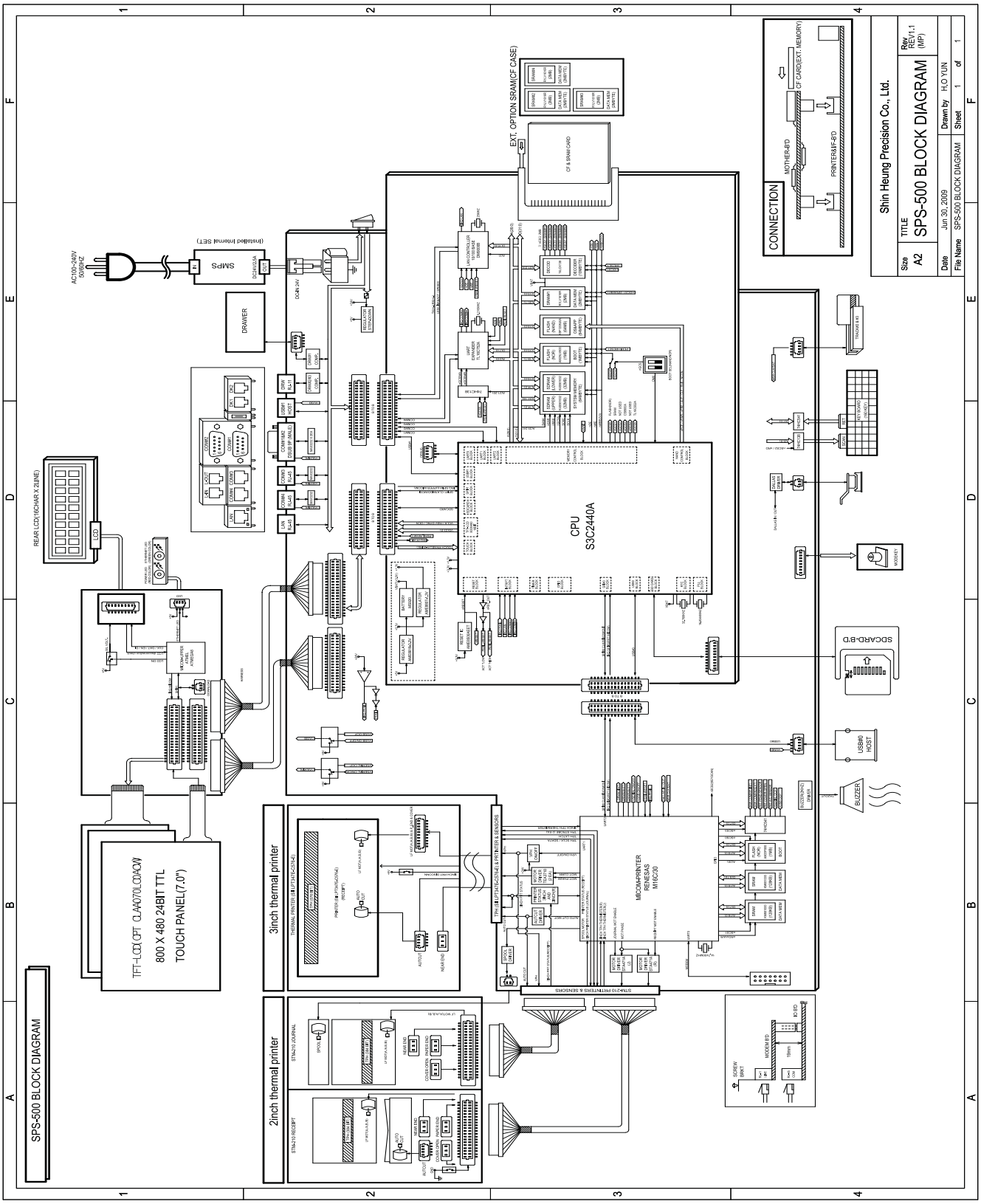

MEMO

11 Schematic Diagrams

[Schematics Sheet Content]

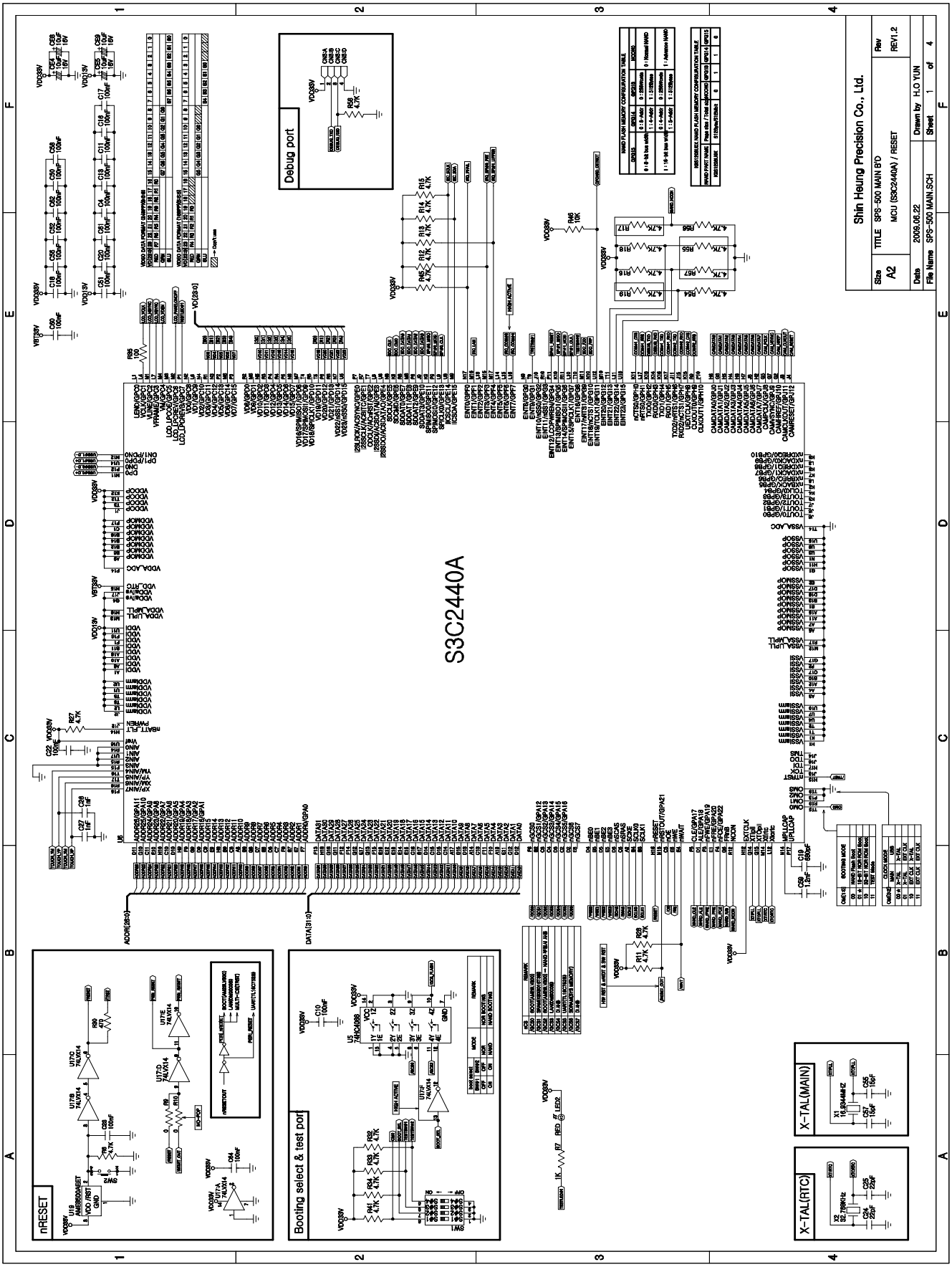
S3C2440A
Debug port
Booting select & test por
nRESET
X-TAL(MAIN)
X-TAL(RTC)
Shin Heung Precision Co., Ltd.
TITLE SPS-500 MAIN B'D
MCU (S3C2440A) / RESET
Size A2
Rev REV1.2
Date 2009.06.22
Drawn by H.O YUN
File Name SPS-500 MAIN.SCH
Sheet 1 of 4

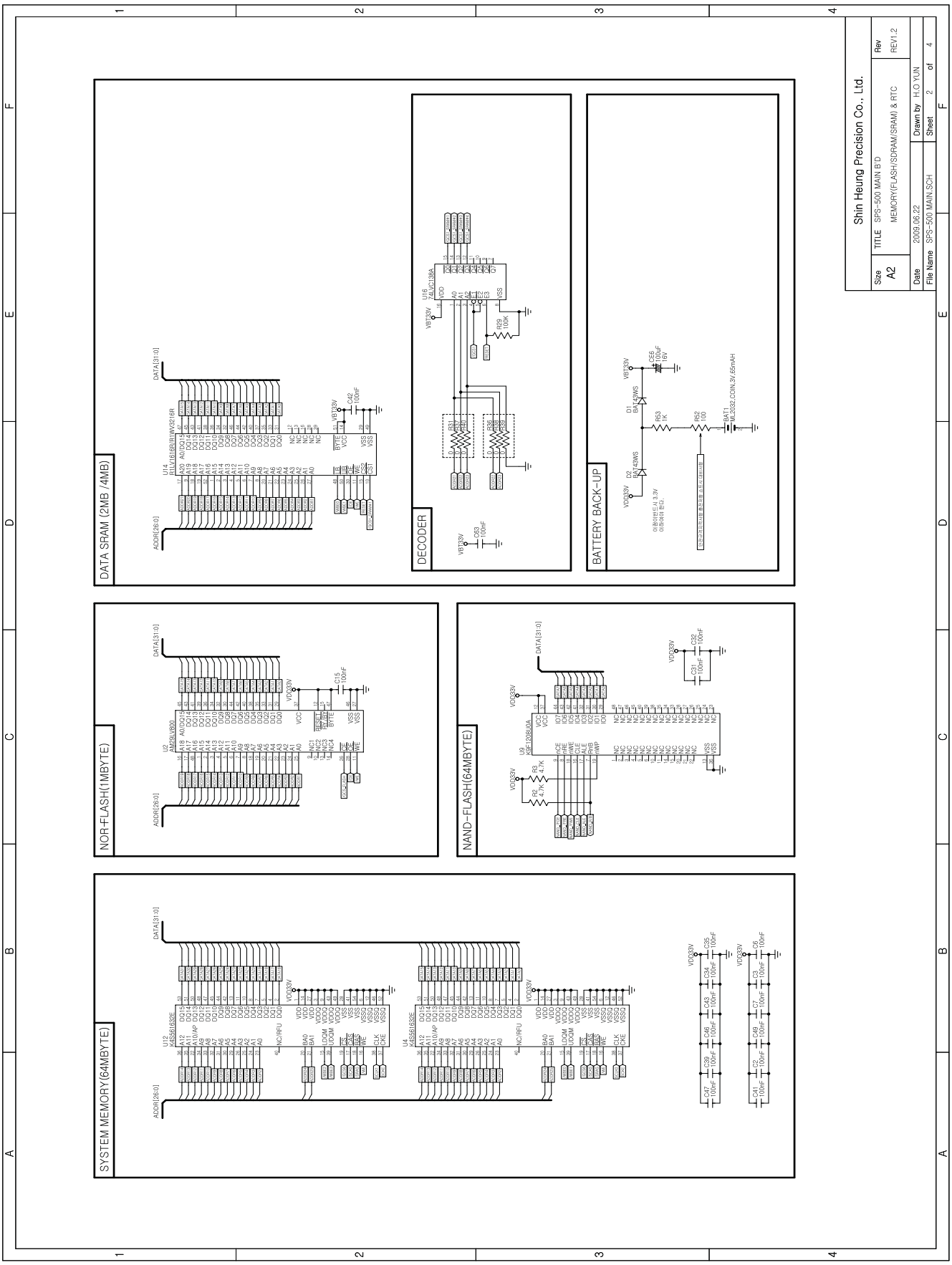
DATA SRAM (2MB /4MB)
DECODER
BATTERY BACK-UP
NOR-FLASH(1MBYTE)
NAND-FLASH(64MBYTE)
SYSTEM MEMORY(64MBYTE)
Shin Heung Precision Co., Ltd.
TITLE SPS-500 MAIN B'D
MEMORY(FLASH/SDRAM/SRAM) & RTC
Size A2
Rev REV1.2
Date 2009.06.22
Drawn by H.O YUN
File Name SPS-500 MAIN.SCH
Sheet 2 of 4

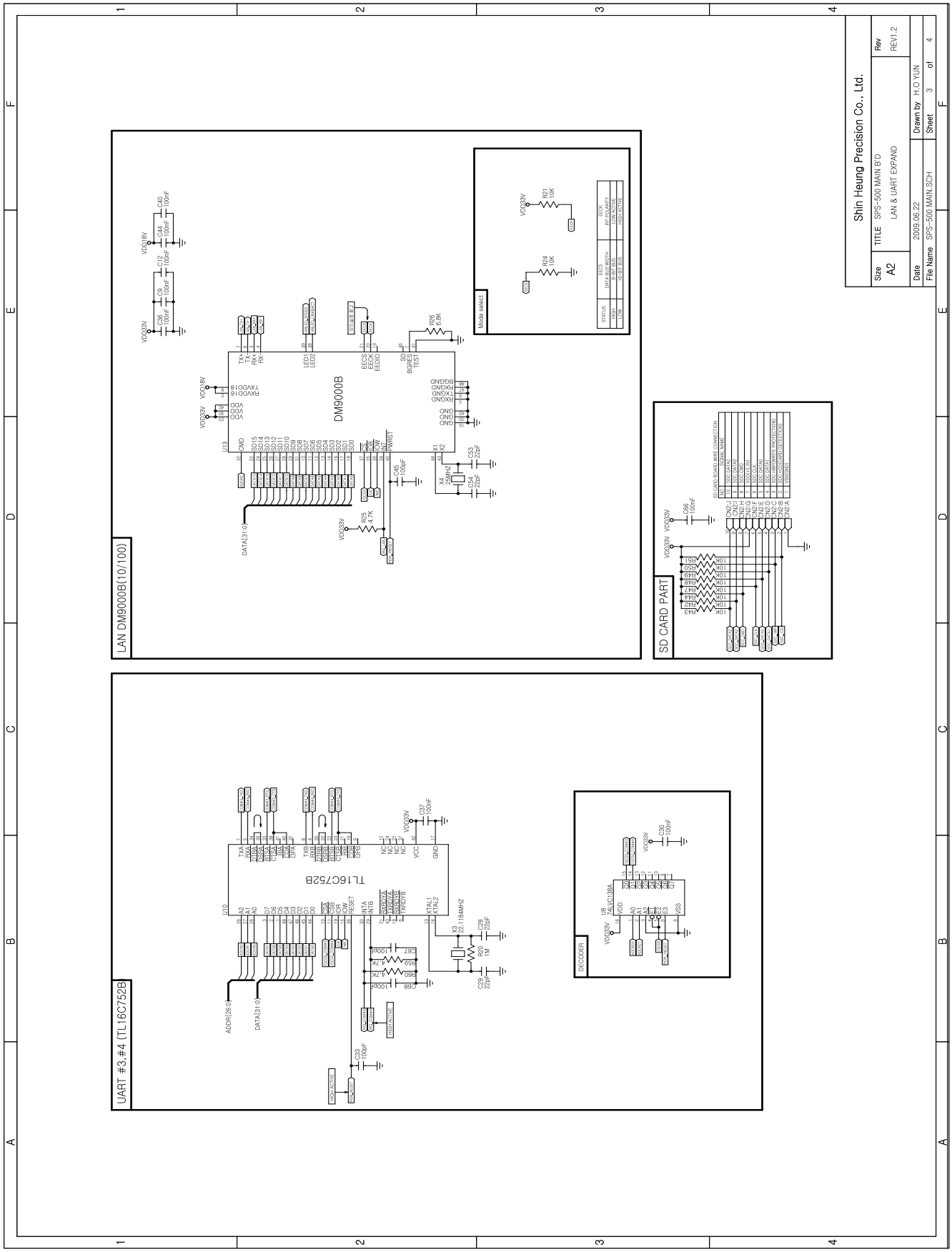
LAN DM9000B(10/100)
DM9000B
Mode select
SD CARD PART
UART #3,#4 (TL16C752B)
TL16C752B
DECODER
Shin Heung Precision Co., Ltd.
Size A2
TITLE SPS-500 MAIN B'D
LAN & UART EXPAND
Rev REV1.2
Date 2009.06.22
Drawn by H.O YUN
File Name SPS-500 MAIN.SCH
Sheet 3 of 4

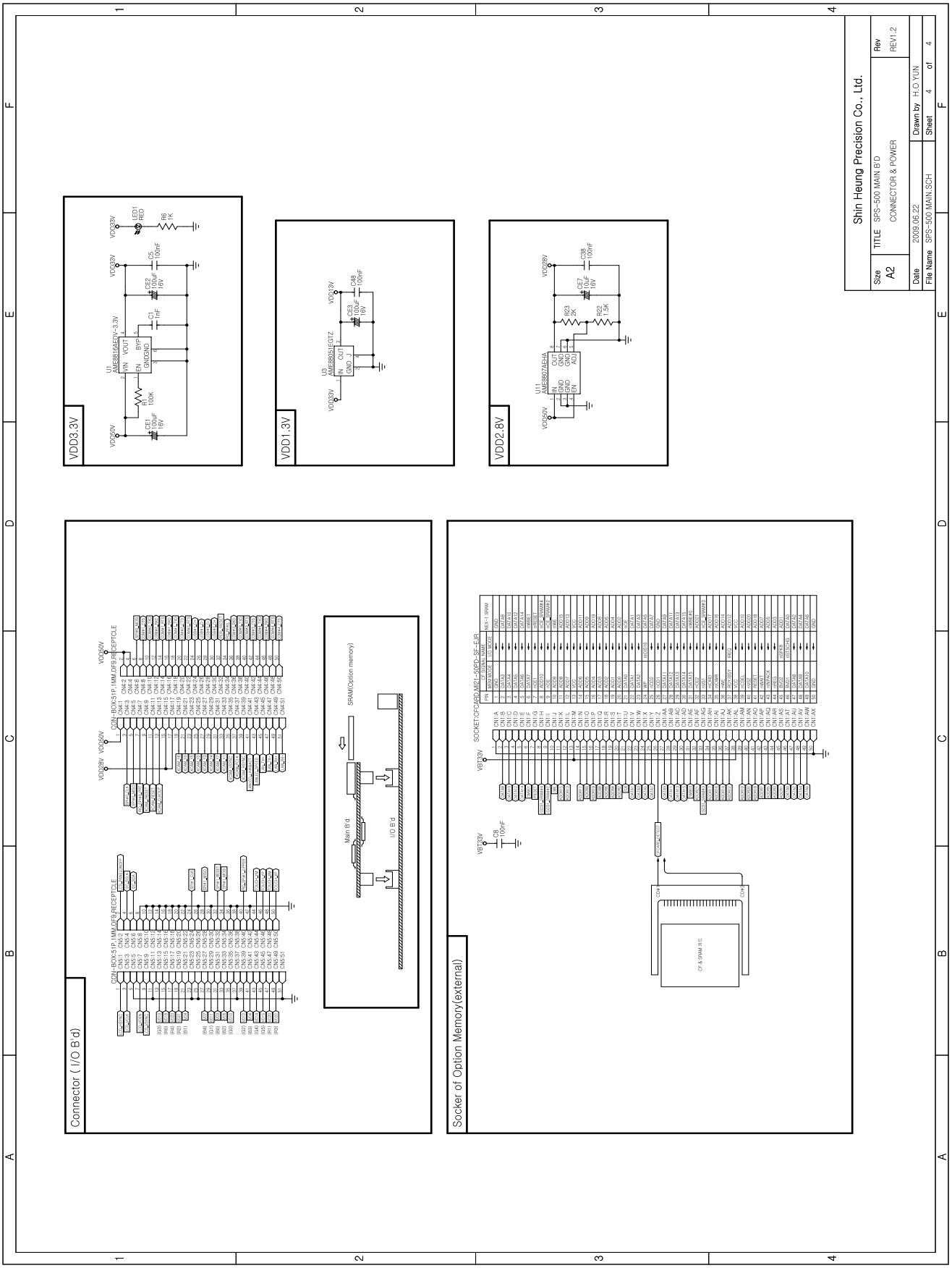
VDD3.3V
VDD1.3V
VDD2.8V
Connector (I/O B'd)
Socker of Option Memory(external)
Shin Heung Precision Co., Ltd.
TITLE SPS-500 MAIN B'D
CONNECTOR & POWER
Size A2
Rev REV1.2
Date 2009.06.22
Drawn by H.O YUN
File Name SPS-500 MAIN.SCH
Sheet 4 of 4

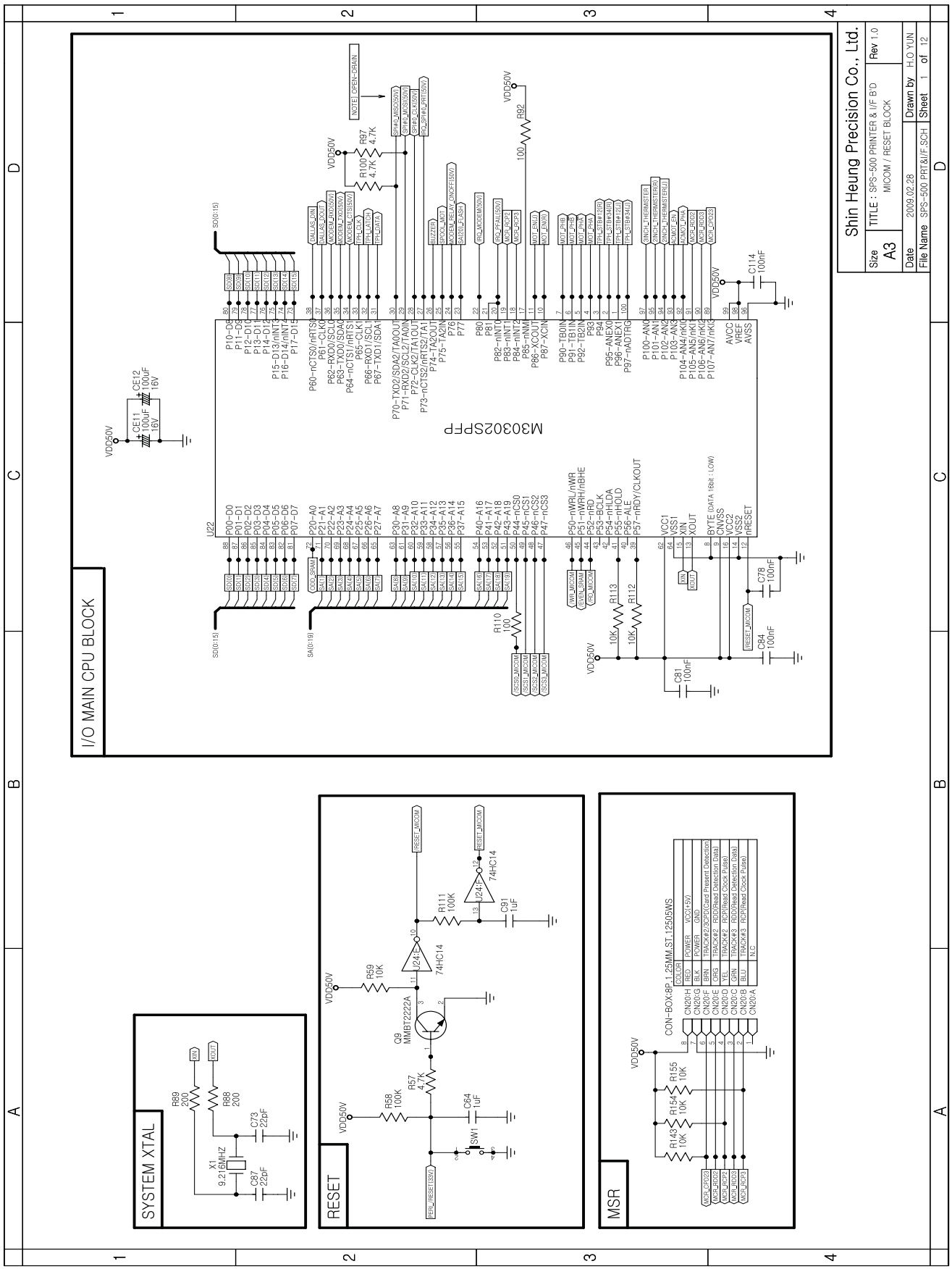
Shin Heung Precision Co., Ltd.
Size A3
TITLE : SPS-500 PRINTER & I/F B'D
MICOM / RESET BLOCK
Rev 1.0
Date 2009.02.28
Drawn by H.O YUN
File Name SPS-500 PRT&I/F.SCH
Sheet 1 of 12
I/O MAIN CPU BLOCK
M30302SPFP
U22
SYSTEM XTAL
X1 9.216MHZ
RESET
MSR
CON-BOX:8P,1.25MM,ST,12505WS

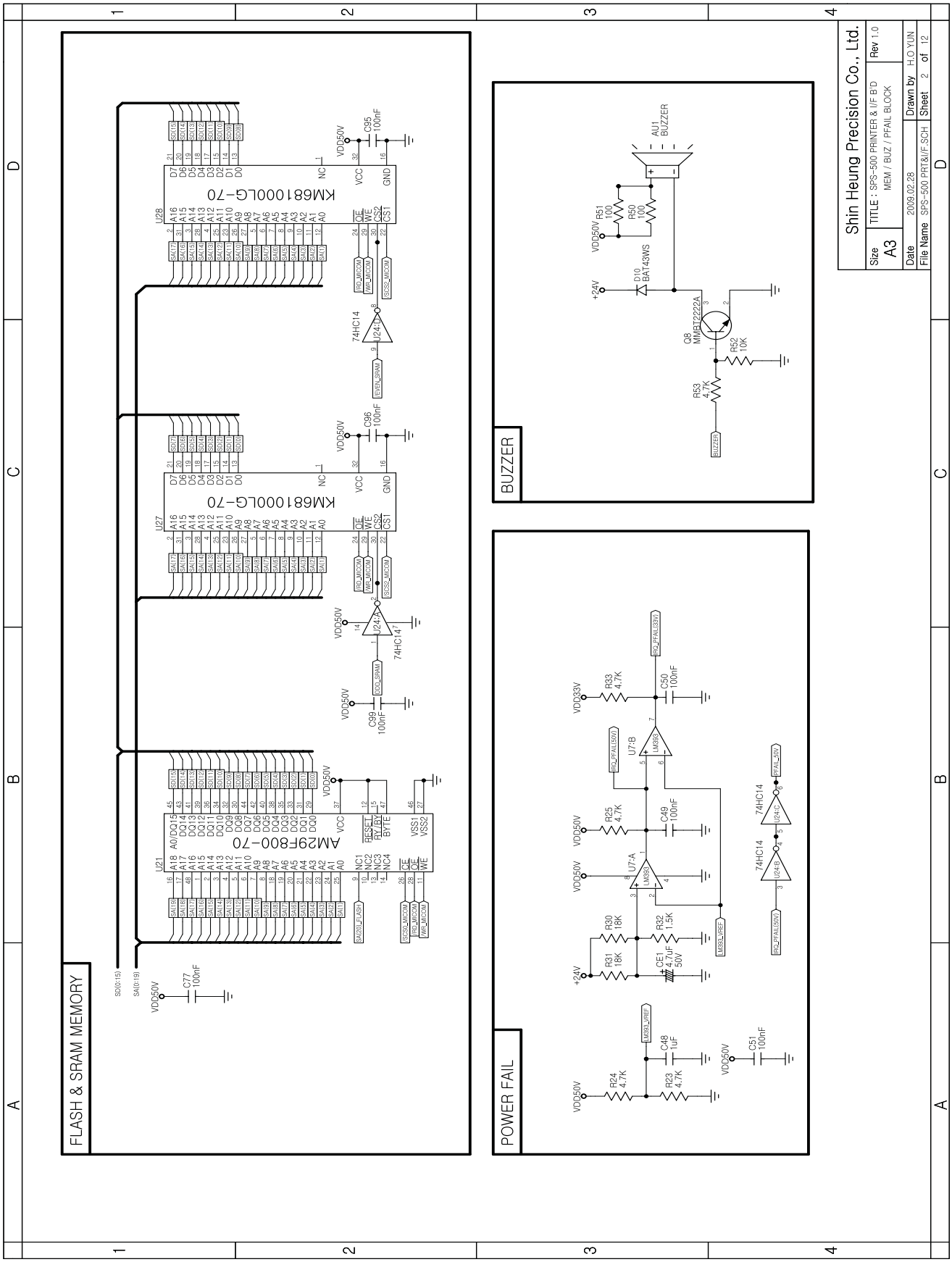
FLASH & SRAM MEMORY
BUZZER
POWER FAIL
Shin Heung Precision Co., Ltd.
TITLE : SPS-500 PRINTER & I/F B'D
MEM / BUZ / PFAIL BLOCK
Size A3
Rev 1.0
Date 2009.02.28
Drawn by H.O YUN
File Name SPS-500 PRT&I/F.SCH
Sheet 2 of 12

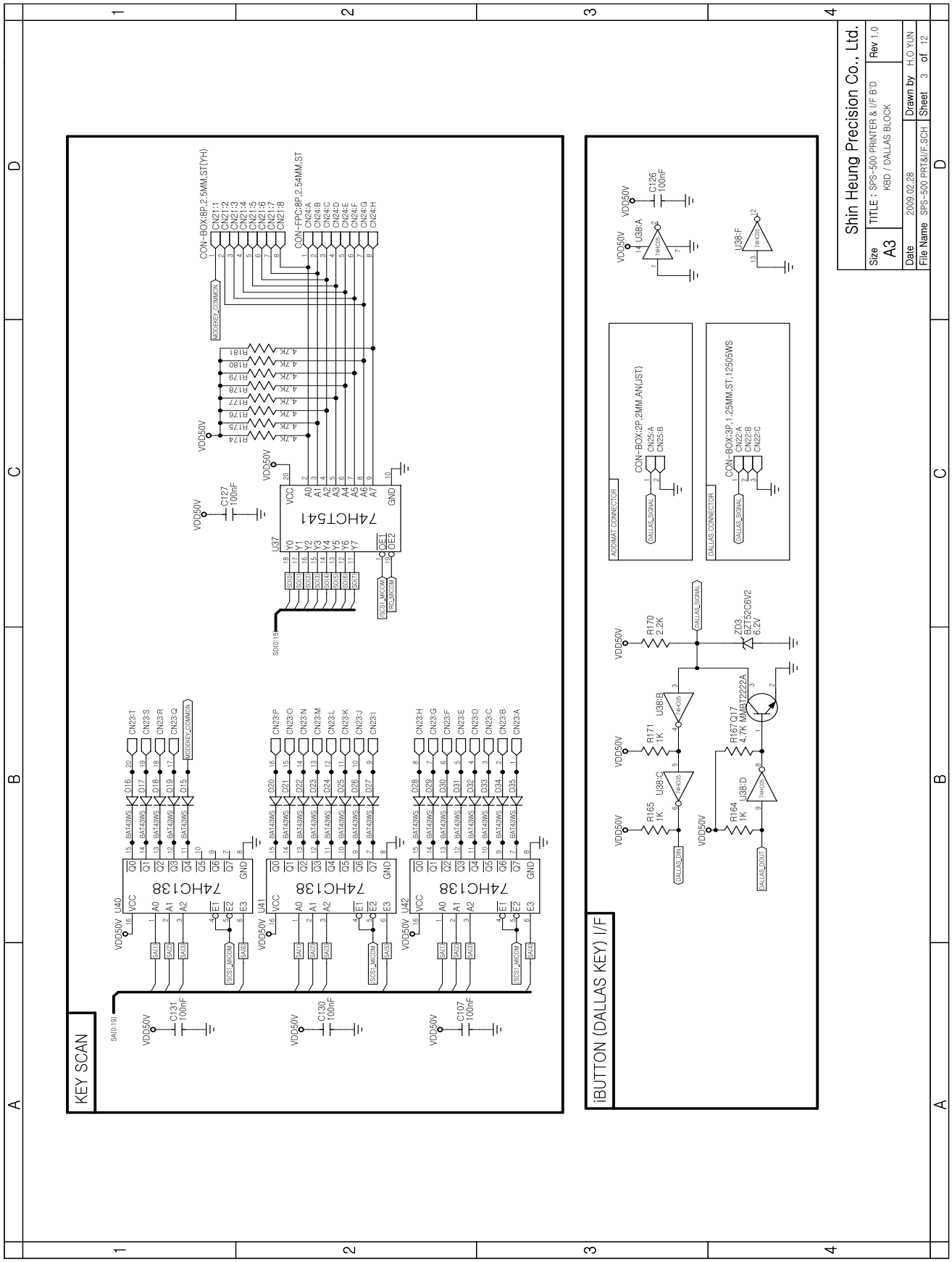
KEY SCAN
iBUTTON (DALLAS KEY) I/F
74HC138
74HCT541
CON-BOX:8P,2.5MM,ST(YH)
CON-FPC:8P,2.54MM,ST
CON-BOX:2P,2MM,AN(JST)
CON-BOX:3P,1.25MM,ST,12505WS
Shin Heung Precision Co., Ltd.
TITLE : SPS-500 PRINTER & I/F B'D
KBD / DALLAS BLOCK
Size A3
Rev 1.0
Date 2009.02.28
Drawn by H.O YUN
File Name SPS-500 PRT&I/F.SCH
Sheet 3 of 12

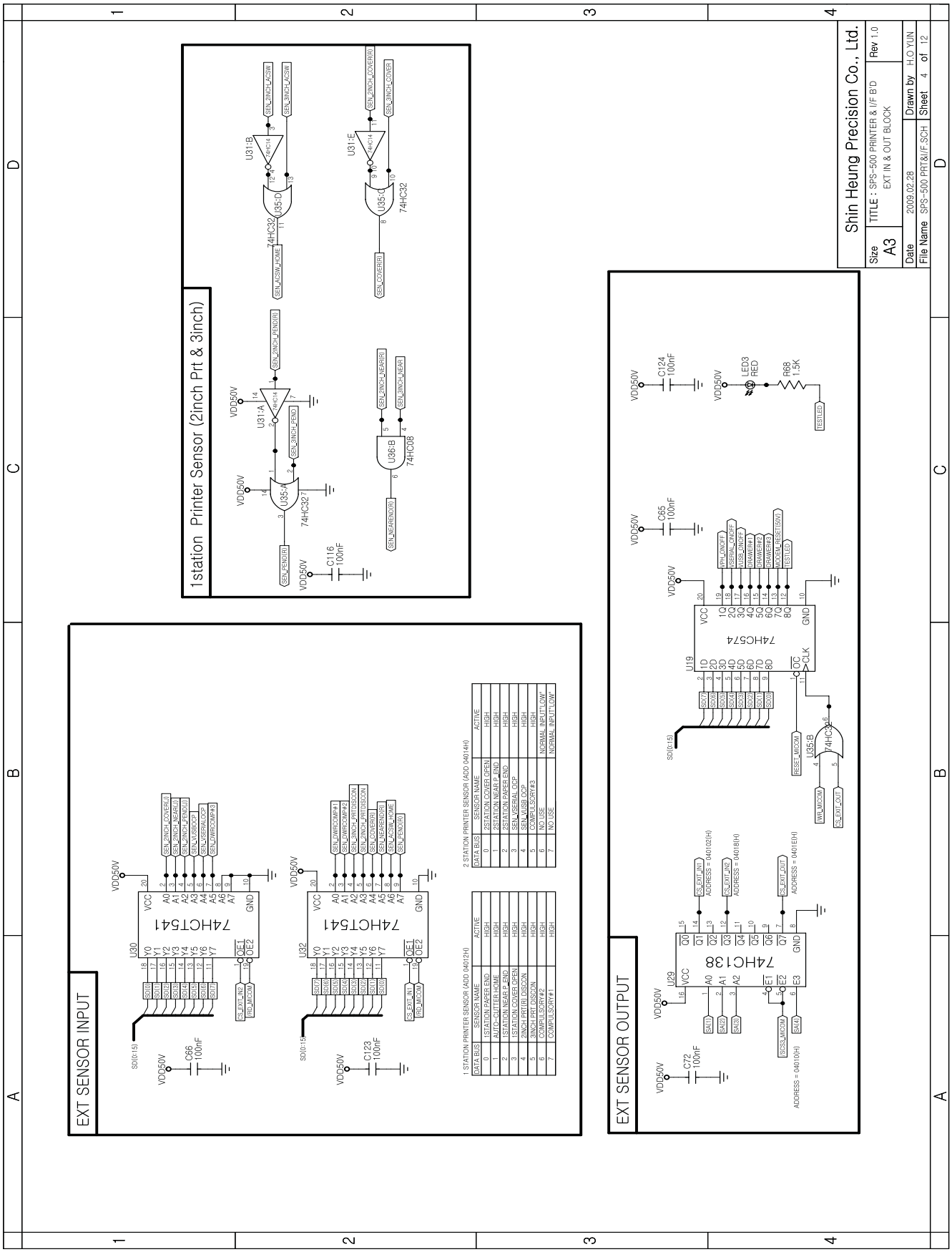
1station Printer Sensor (2inch Prt & 3inch)
EXT SENSOR INPUT
EXT SENSOR OUTPUT
74HC541
74HC138
74HC574
74HC32
74HC08
74HC14
Shin Heung Precision Co., Ltd.
TITLE : SPS-500 PRINTER & I/F B'D
EXT IN & OUT BLOCK
Size A3
Rev 1.0
Date 2009.02.28
Drawn by H.O YUN
File Name SPS-500 PRT&I/F.SCH
Sheet 4 of 12

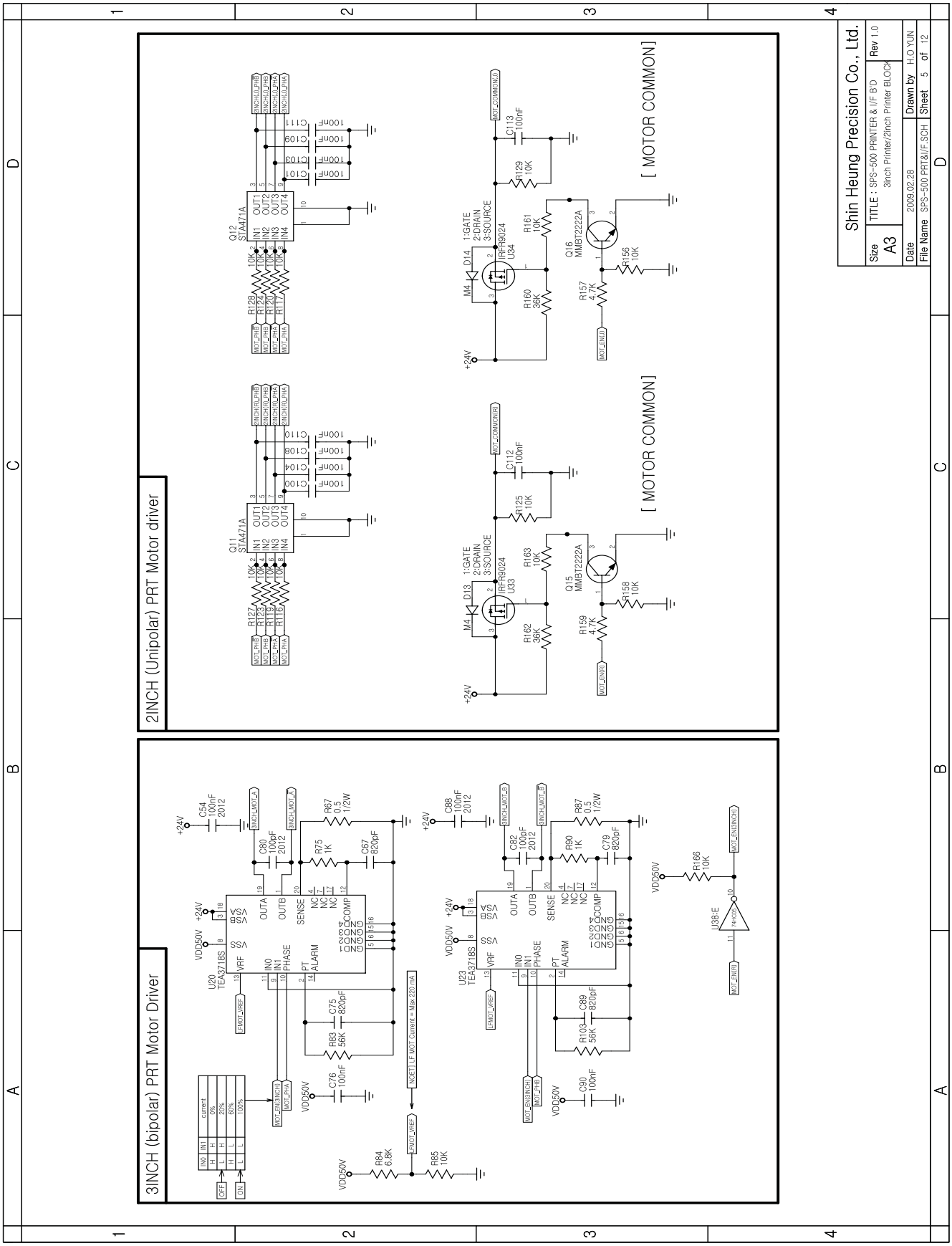
2INCH (Unipolar) PRT Motor driver
[MOTOR COMMON]
[MOTOR COMMON]
3INCH (bipolar) PRT Motor Driver
Shin Heung Precision Co., Ltd.
Size A3
TITLE : SPS-500 PRINTER & I/F B'D
3inch Printer/2inch Printer BLOCK
Rev 1.0
Date 2009.02.28
Drawn by H.O YUN
File Name SPS-500 PRT&I/F.SCH
Sheet 5 of 12

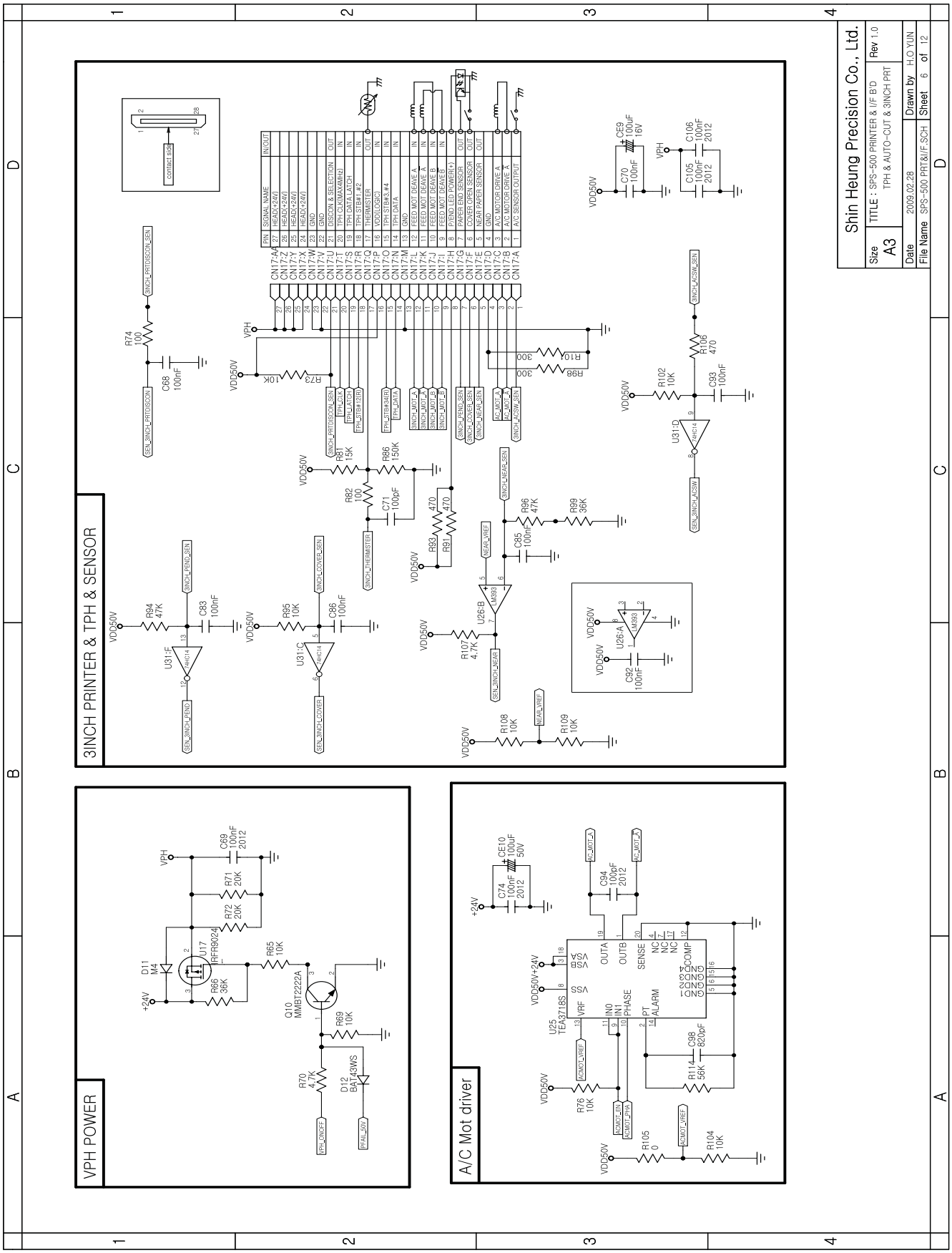
3INCH PRINTER & TPH & SENSOR
VPH POWER
A/C Mot driver
Shin Heung Precision Co., Ltd.
Size A3
TITLE : SPS-500 PRINTER & I/F B'D
TPH & AUTO-CUT & 3INCH PRT
Rev 1.0
Date 2009.02.28
Drawn by H.O YUN
File Name SPS-500 PRT&I/F.SCH
Sheet 6 of 12

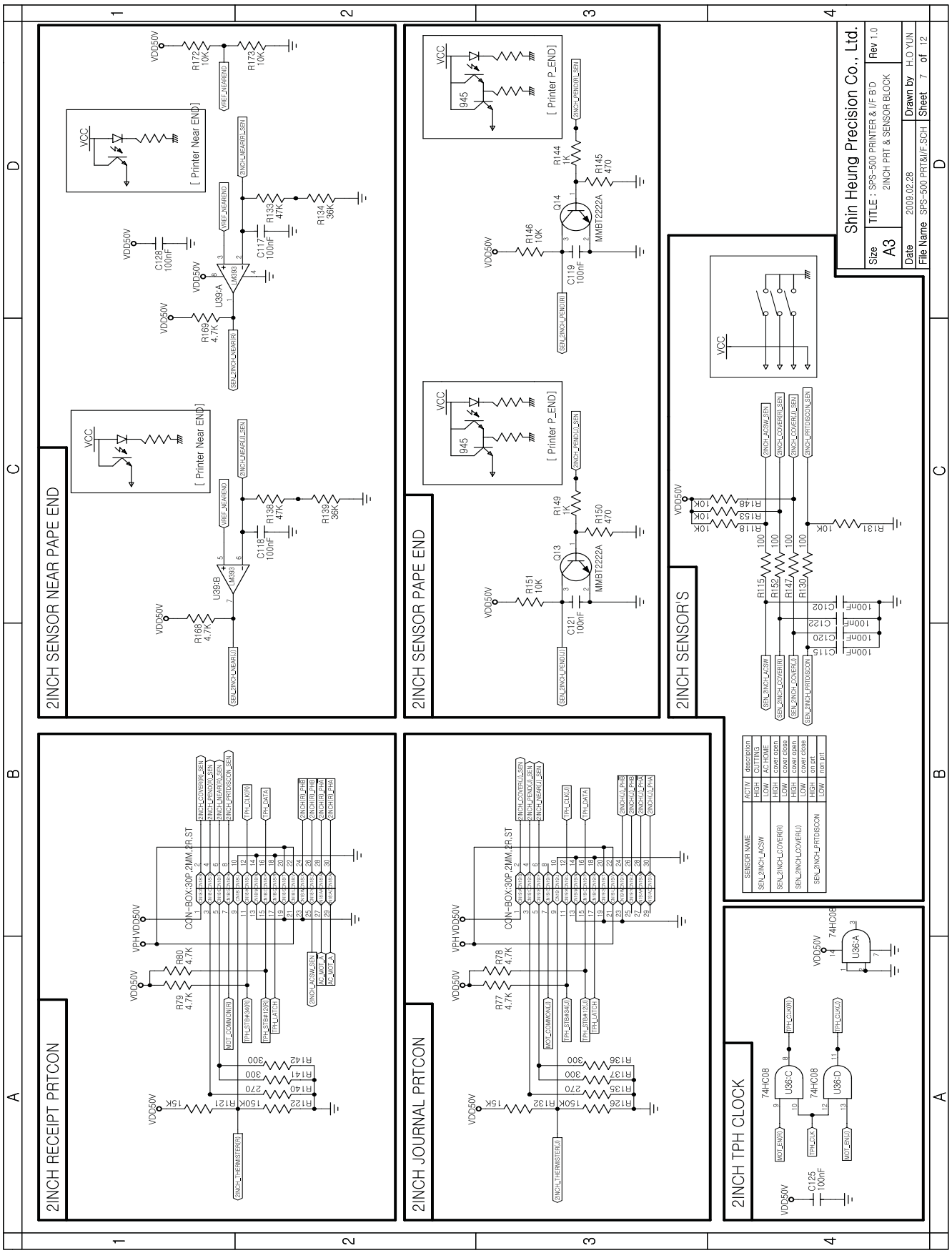
2INCH SENSOR NEAR PAPE END
2INCH SENSOR PAPE END
2INCH SENSOR'S
2INCH RECEIPT PRTCON
2INCH JOURNAL PRTCON
2INCH TPH CLOCK
Shin Heung Precision Co., Ltd.
TITLE : SPS-500 PRINTER & I/F B'D
2INCH PRT & SENSOR BLOCK
Rev 1.0
Size A3
Date 2009.02.28
Drawn by H.O YUN
File Name SPS-500 PRT&I/F.SCH
Sheet 7 of 12
SENSOR NAME | ACTIV | description
SEN_2INCH_ACSW | HIGH | CUTTING
SEN_2INCH_ACSW | LOW | AC HOME
SEN2INCH_COVER(R) | HIGH | cover open
SEN2INCH_COVER(R) | LOW | cover close
SEN2INCH_COVER(U) | HIGH | cover open
SEN2INCH_COVER(U) | LOW | cover close
SEN_2INCH_PRTDISCON | HIGH | on prt
SEN_2INCH_PRTDISCON | LOW | non prt

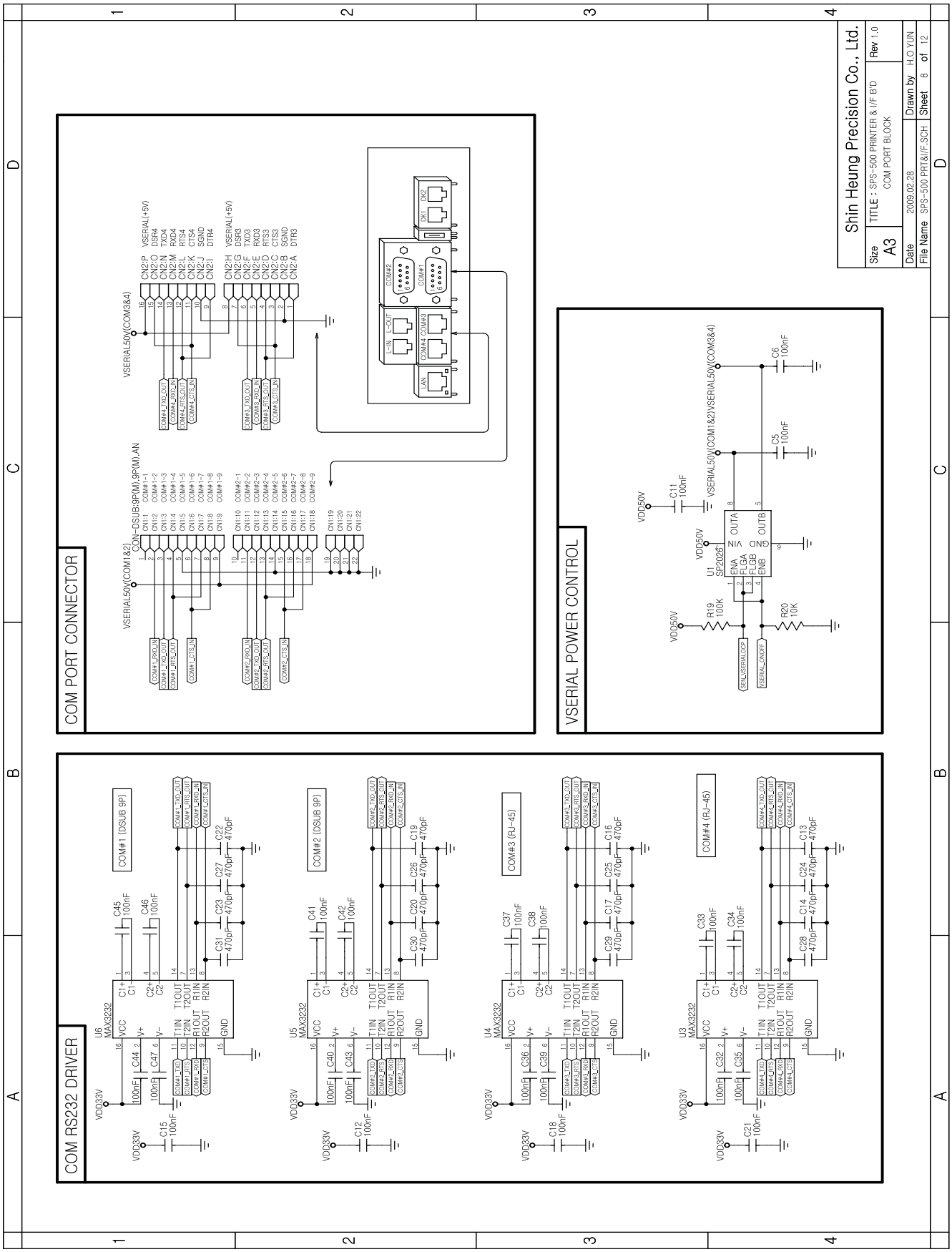
COM PORT CONNECTOR
VSERIAL50V(COM1&2)
CON-DSUB9P(M),9P(M),AN
VSERIAL50V(COM3&4)
VSERIAL(+5V)
DSR4
TXD4
RXD4
RTS4
CTS4
SGND
DTR4
DSR3
TXD3
RXD3
RTS3
CTS3
SGND
DTR3
LAN
L-IN
L-OUT
COM#4
COM#3
COM#2
COM#1
SW1
SW2
VSERIAL POWER CONTROL
VDD50V
C11 100nF
VSERIAL50V(COM1&2)\VSERIAL50V(COM3&4)
C6 100nF
C5 100nF
U1 SP2026
ENA
ENB
OUTA
OUTB
GND
VIN
R19 100K
R20 10K
(SEN_VSERIAL_OCP)
(VSERIAL_ON/OFF)
COM RS232 DRIVER
COM#1 (DSUB 9P)
COM#2 (DSUB 9P)
COM#3 (RJ-45)
COM#4 (RJ-45)
U6 MAX3232
U5 MAX3232
U4 MAX3232
U3 MAX3232
VDD33V
VCC
GND
C1+
C1-
C2+
C2-
V+
V-
T1IN
T2IN
R1IN
R2IN
T1OUT
T2OUT
R1OUT
R2OUT
C15 100nF
C12 100nF
C18 100nF
C21 100nF
C44 100nF
C47 100nF
C45 100nF
C46 100nF
C40 100nF
C43 100nF
C41 100nF
C42 100nF
C36 100nF
C39 100nF
C37 100nF
C38 100nF
C32 100nF
C35 100nF
C33 100nF
C34 100nF
C22 470pF
C27 470pF
C23 470pF
C31 470pF
C19 470pF
C26 470pF
C20 470pF
C30 470pF
C16 470pF
C25 470pF
C17 470pF
C29 470pF
C13 470pF
C24 470pF
C14 470pF
C28 470pF
Shin Heung Precision Co., Ltd.
Size A3
TITLE : SPS-500 PRINTER & I/F B'D
COM PORT BLOCK
Rev 1.0
Date 2009.02.28
Drawn by H.O YUN
File Name SPS-500 PRT&I/F.SCH
Sheet 8 of 12

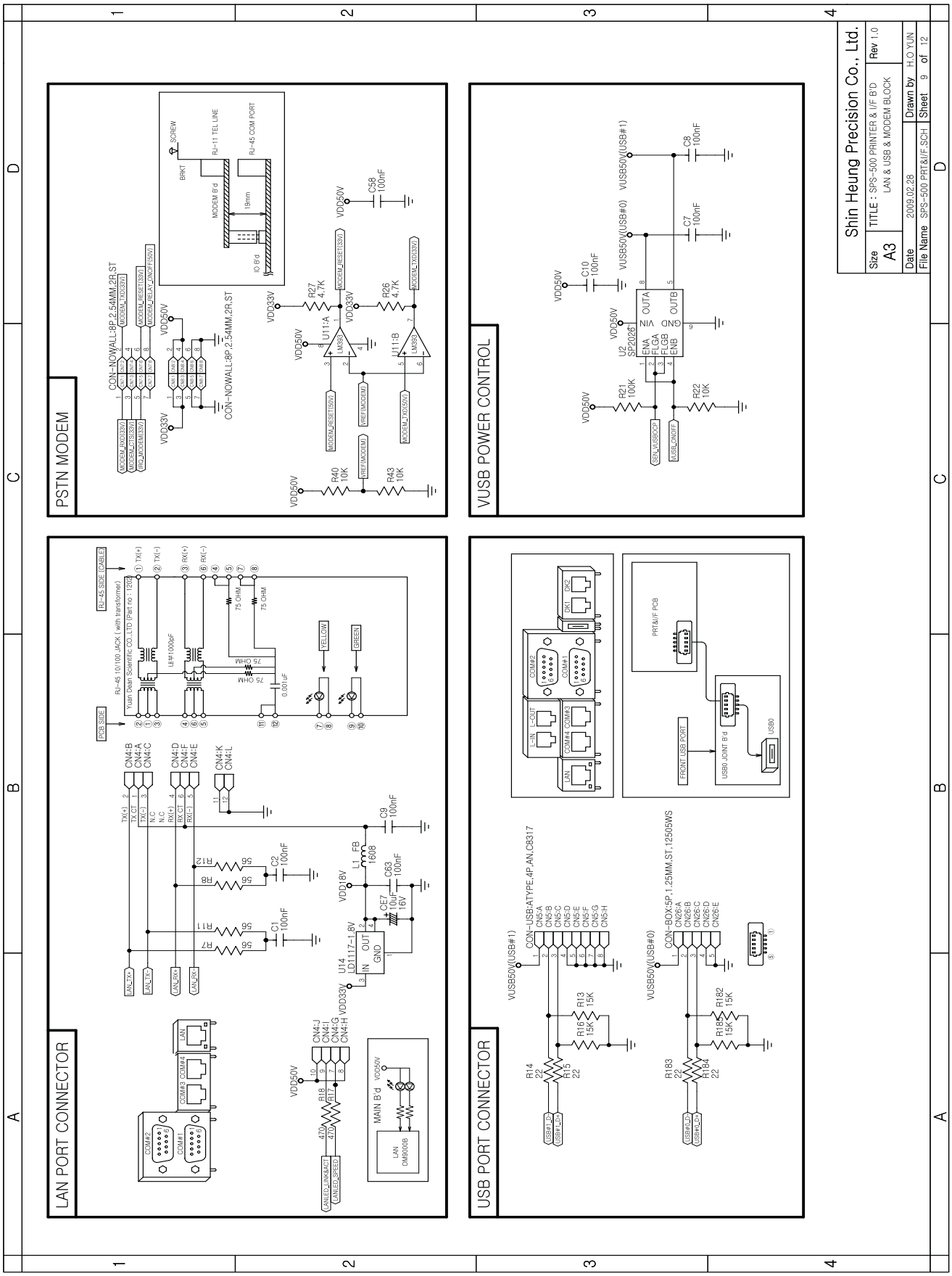
PSTN MODEM
VUSB POWER CONTROL
LAN PORT CONNECTOR
USB PORT CONNECTOR
Shin Heung Precision Co., Ltd.
Size A3
TITLE : SPS-500 PRINTER & I/F B'D
LAN & USB & MODEM BLOCK
Rev 1.0
Date 2009.02.28
Drawn by H.O YUN
File Name SPS-500 PRT&I/F.SCH
Sheet 9 of 12

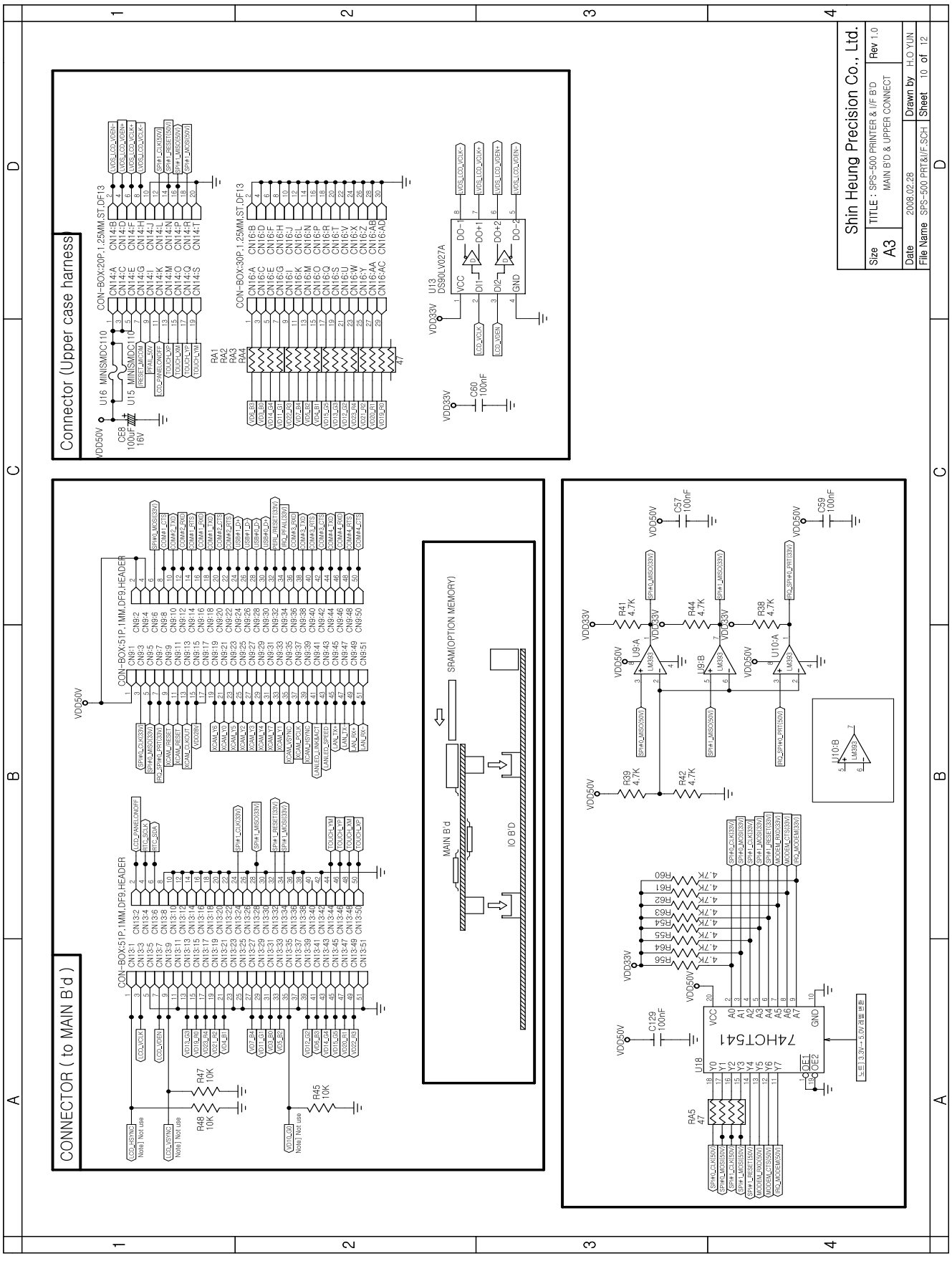
Connector (Upper case harness
CONNECTOR (to MAIN B'd)
MAIN B'd
IO B'D
SRAM(OPTION MEMORY)
Shin Heung Precision Co., Ltd.
Size A3
TITLE : SPS-500 PRINTER & I/F B'D
MAIN B'D & UPPER CONNECT
Rev 1.0
Date 2008.02.28
Drawn by H.O YUN
File Name SPS-500 PRT&I/F.SCH
Sheet 10 of 12

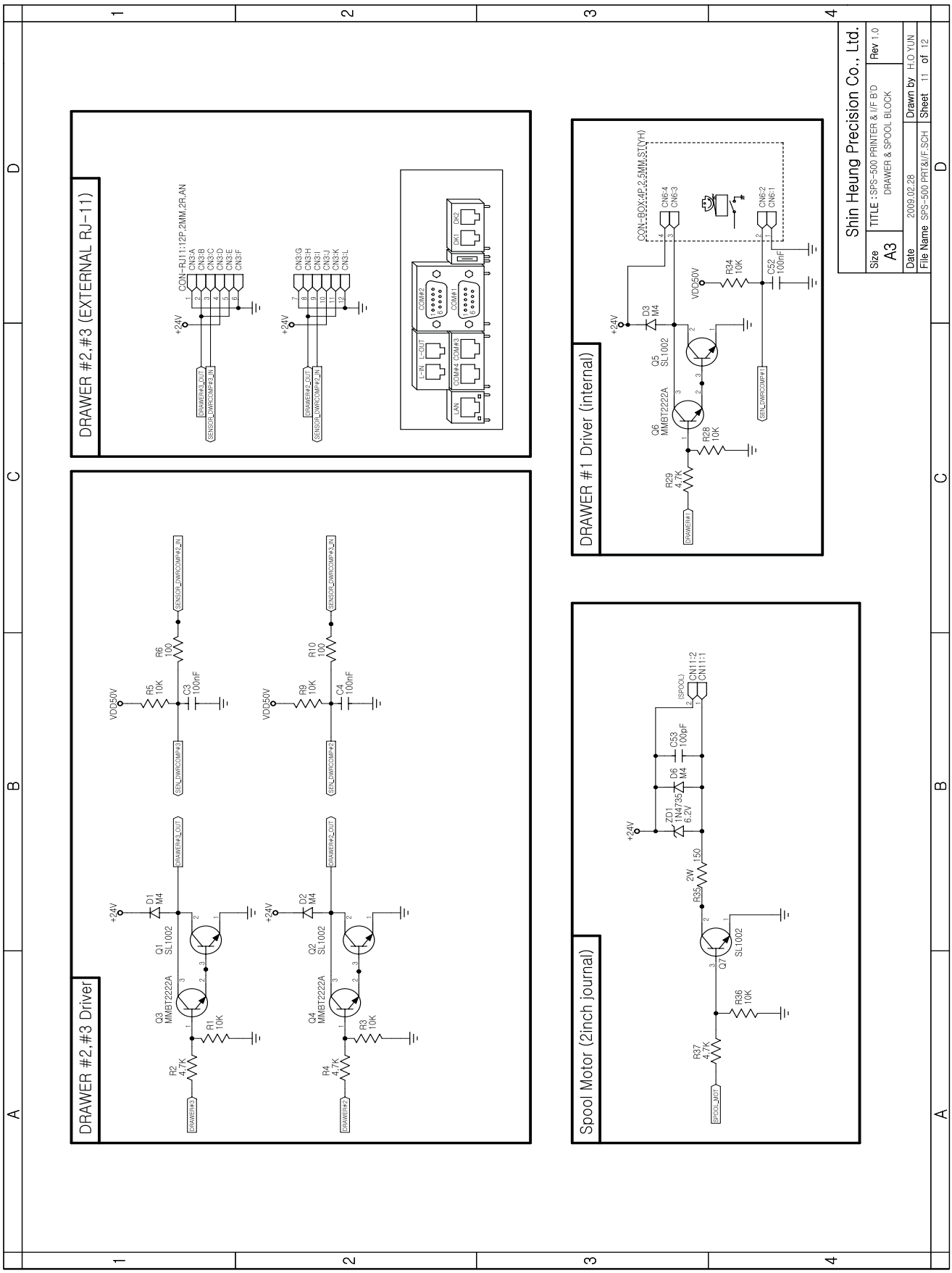
DRAWER #2,#3 (EXTERNAL RJ-11)
CON-RJ11:12P,2MM,2R,AN
CN3:A
CN3:B
CN3:C
CN3:D
CN3:E
CN3:F
CN3:G
CN3:H
CN3:I
CN3:J
CN3:K
CN3:L
+24V
DRAWER#2_OUT
SENSOR_DWRCOMP#2_IN
LAN
L-IN
L-OUT
COM#4
COM#3
COM#2
COM#1
DK1
DK2
DRAWER #2,#3 Driver
VDD50V
R5 10K
R6 100
C3 100nF
R9 10K
R10 100
C4 100nF
D1 M4
D2 M4
Q1 SL1002
Q2 SL1002
Q3 MMBT2222A
Q4 MMBT2222A
R1 10K
R3 10K
R2 4.7K
R4 4.7K
DRAWER#3
DRAWER#2
SEN_DWRCOMP#3
SEN_DWRCOMP#2
DRAWER #1 Driver (internal)
CON-BOX:4P-2.5MM,ST(YH)
CN6:4
CN6:3
CN6:2
CN6:1
D3 M4
Q5 SL1002
Q6 MMBT2222A
R34 10K
C52 100nF
R28 10K
R29 4.7K
DRAWER#1
SEN_DWRCOMP#1
Spool Motor (2inch journal)
(SPOOL)
CN11:2
CN11:1
C53 100pF
D6 M4
ZD1 1N4735 6.2V
R35 150 2W
Q7 SL1002
R36 10K
R37 4.7K
SPOOL_MOT
Shin Heung Precision Co., Ltd.
Size A3
TITLE : SPS-500 PRINTER & I/F B'D
DRAWER & SPOOL BLOCK
Rev 1.0
Date 2009.02.28
Drawn by H.O YUN
File Name SPS-500 PRT&I/F.SCH
Sheet 11 of 12

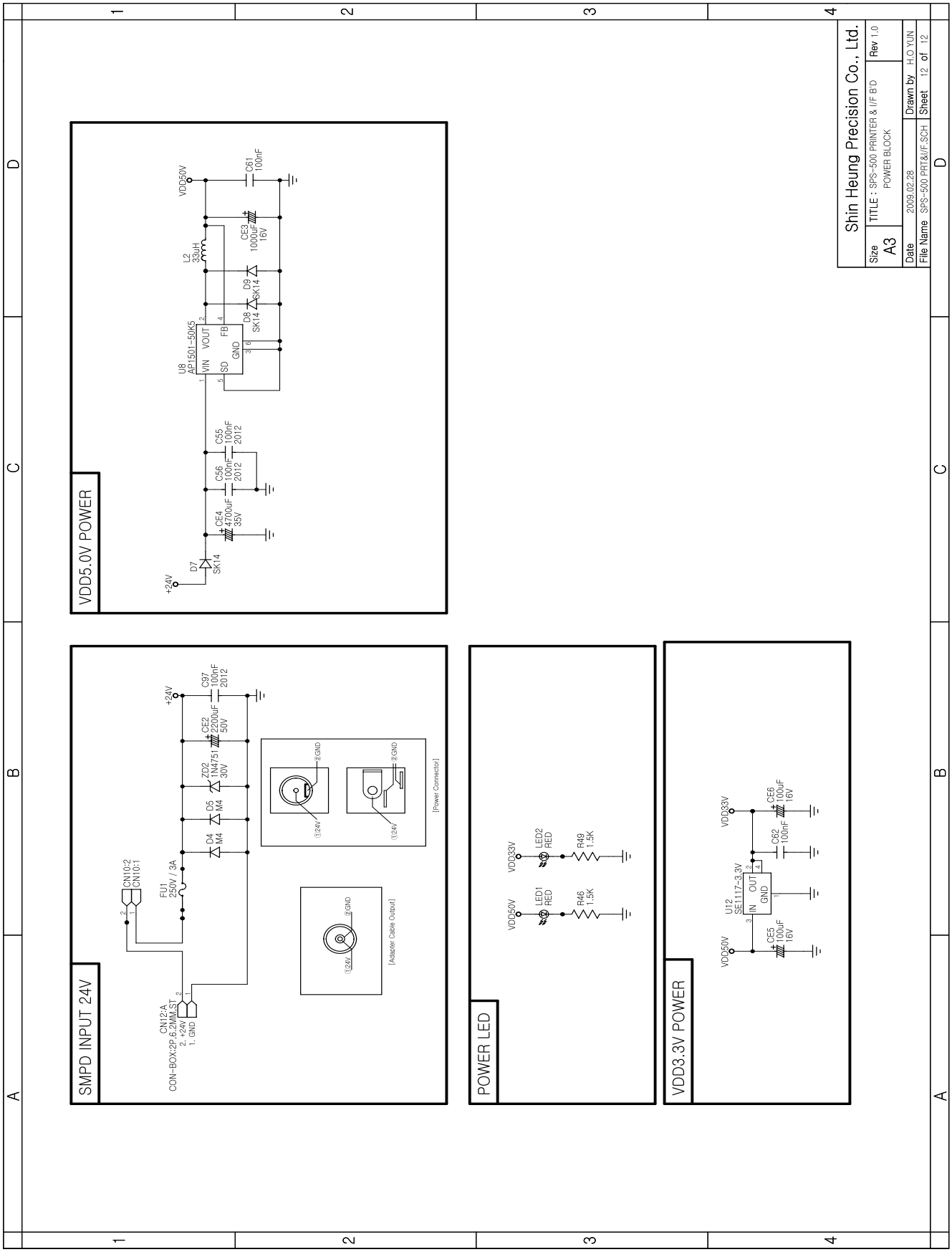
VDD5.0V POWER
+24V
D7 SK14
CE4 4700uF 35V
C56 100nF 2012
C55 100nF 2012
U8 AP1501-50K5
VIN VOUT SD FB GND
D8 SK14
D9 SK14
L2 33uH
CE3 1000uF 16V
VDD50V
C61 100nF
SMPD INPUT 24V
CN12:A CON-BOX:2P,6.2MM,ST
2: +24V
1: GND
CN10:2 CN10:1
FU1 250V / 3A
D4 M4
D5 M4
ZD2 1N4751 30V
CE2 2200uF 50V
C97 100nF 2012
[Adapter Cable Output]
[Power Connector]
POWER LED
VDD50V
LED1 RED
R46 1.5K
VDD33V
LED2 RED
R49 1.5K
VDD3.3V POWER
U12 SE1117-3.3V
IN OUT GND
CE5 100uF 16V
C62 100nF
CE6 100uF 16V
Shin Heung Precision Co., Ltd.
Size A3
TITLE : SPS-500 PRINTER & I/F B'D
POWER BLOCK
Rev 1.0
Date 2009.02.28
Drawn by H.O YUN
File Name SPS-500 PRT&I/F.SCH
Sheet 12 of 12

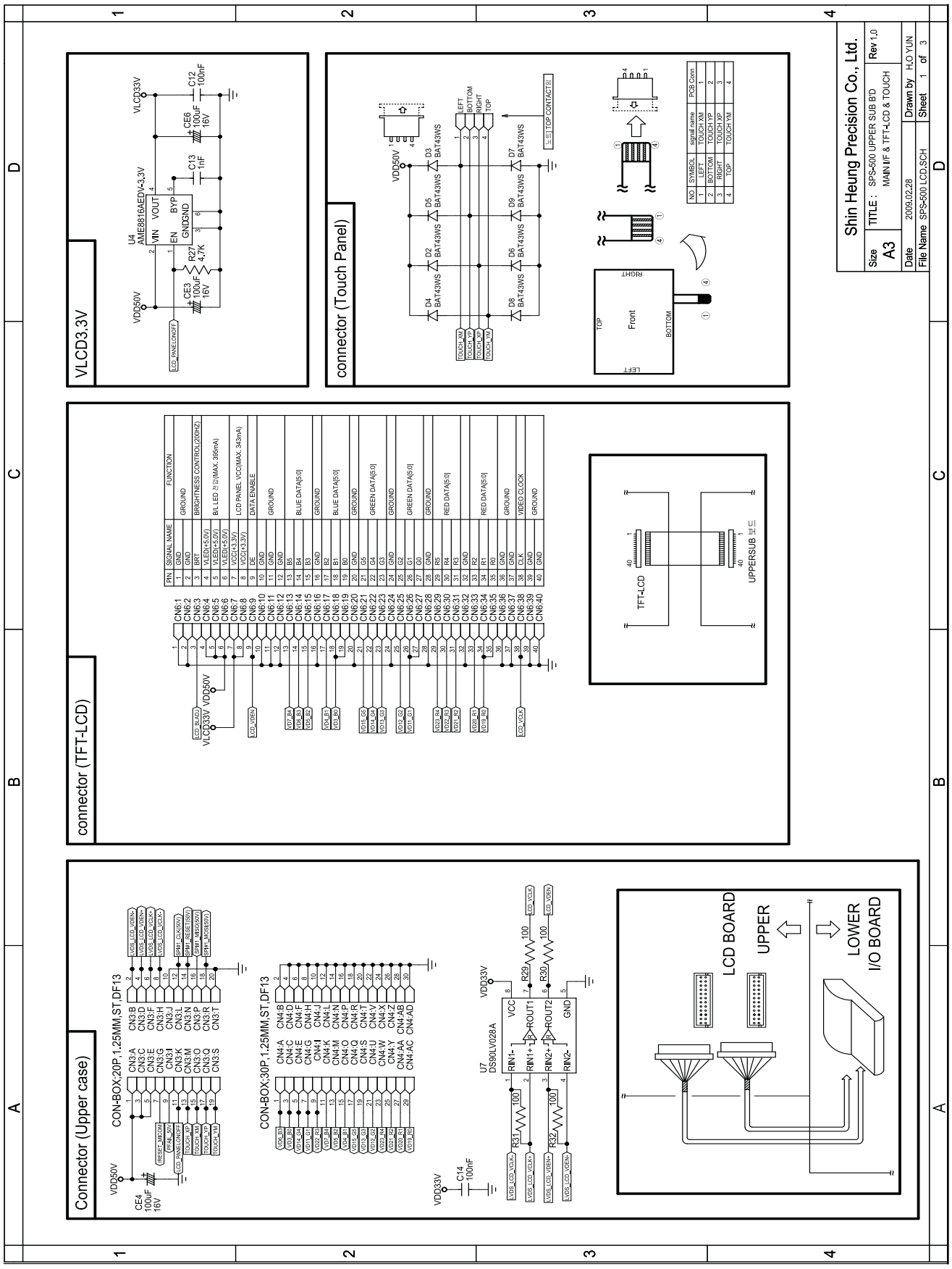
VLCD3.3V
connector (Touch Panel)
connector (TFT-LCD)
Connector (Upper case)
Shin Heung Precision Co., Ltd.
TITLE : SPS-500 UPPER SUB B'D
MAIN I/F & TFT-LCD & TOUCH
Rev 1.0
Size A3
Date 2009.02.28
Drawn by H.O YUN
File Name SPS-500 LCD.SCH
Sheet 1 of 3
LCD BOARD
UPPER
LOWER
I/O BOARD

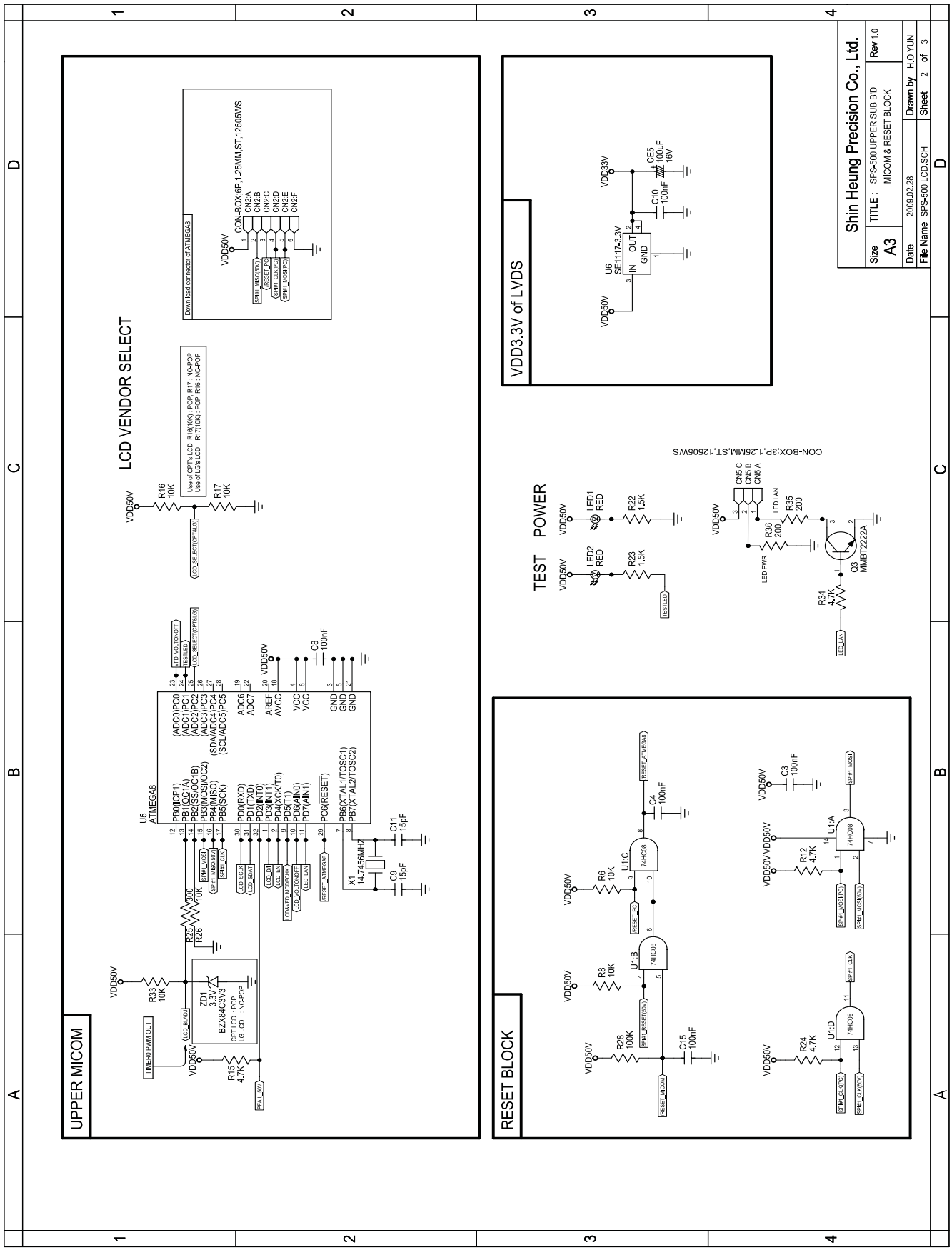
UPPER MICOM
LCD VENDOR SELECT
Down load connector of ATMEGA8
CON-BOX;6P,1.25MM,ST,12505WS
Use of CPT's LCD R16(10K) : POP, R17 : NO-POP
Use of LG's LCD R17(10K) : POP, R16 : NO-POP
U5
ATMEGA8
ZD1
3.3V
BZX84C3V3
CPT LCD : POP
LG LCD : NO-POP
X1
14.7456MHZ
TIMER0 PWM OUT
VDD50V
VDD33V
RESET BLOCK
U1:A
U1:B
U1:C
U1:D
74HC08
VDD3,3V of LVDS
U6
SE1117-3.3V
TEST POWER
LED1
RED
LED2
RED
CON-BOX;3P,1.25MM,ST,12505WS
Q3
MMBT2222A
LED LAN
LED PWR

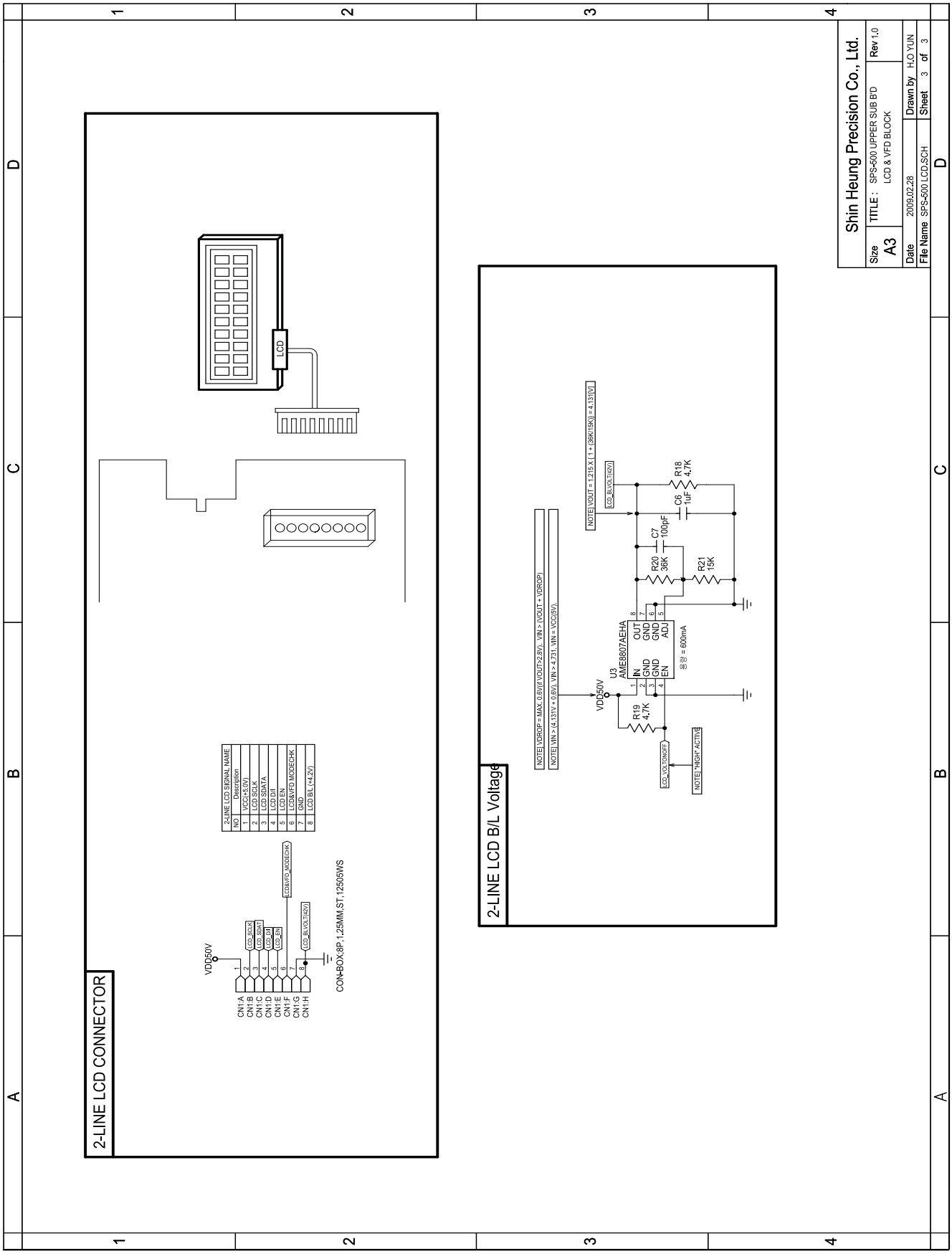
2-LINE LCD CONNECTOR
LCD
2-LINE LCD SIGNAL NAME
NO Description
1 VCC(+5.0V)
2 LCD SCLK
3 LCD SDATA
4 LCD D/I
5 LCD EN
6 LCD&VFD MODECHK
7 GND
8 LCD B/L (+4.2V)
VDD50V
CN1:A
CN1:B
CN1:C
CN1:D
CN1:E
CN1:F
CN1:G
CN1:H
LCD_SCLK
LCD_SDAT
LCD_D/I
LCD_EN
LCD&VFD_MODECHK
LCD_BLVOLT(4.2V)
CON-BOX,8P,1.25MM,ST,12505WS
2-LINE LCD B/L Voltage
NOTE) VDROP = MAX. 0.6V(if VOUT>2.8V), VIN > (VOUT + VDROP)
NOTE) VIN > (4.131V + 0.6V), VIN > 4.731, VIN = VCC(5V).
NOTE) VOUT = 1.215 X (1 + (36K/15K)) = 4.131[V]
LCD_BLVOLT(4.2V)
R18
4.7K
C6
1uF
C7
100pF
R20
36K
R21
15K
U3
AME8807AEHA
IN
GND
GND
EN
OUT
GND
GND
ADJ
용량 = 600mA
VDD50V
R19
4.7K
LCD_VOLTONOFF
NOTE) "HIGH" ACTIVE
Shin Heung Precision Co., Ltd.
Size
A3
TITLE : SPS-500 UPPER SUB B'D
LCD & VFD BLOCK
Rev 1.0
Date 2009.02.28
Drawn by H.O YUN
File Name SPS-500 LCD.SCH
Sheet 3 of 3

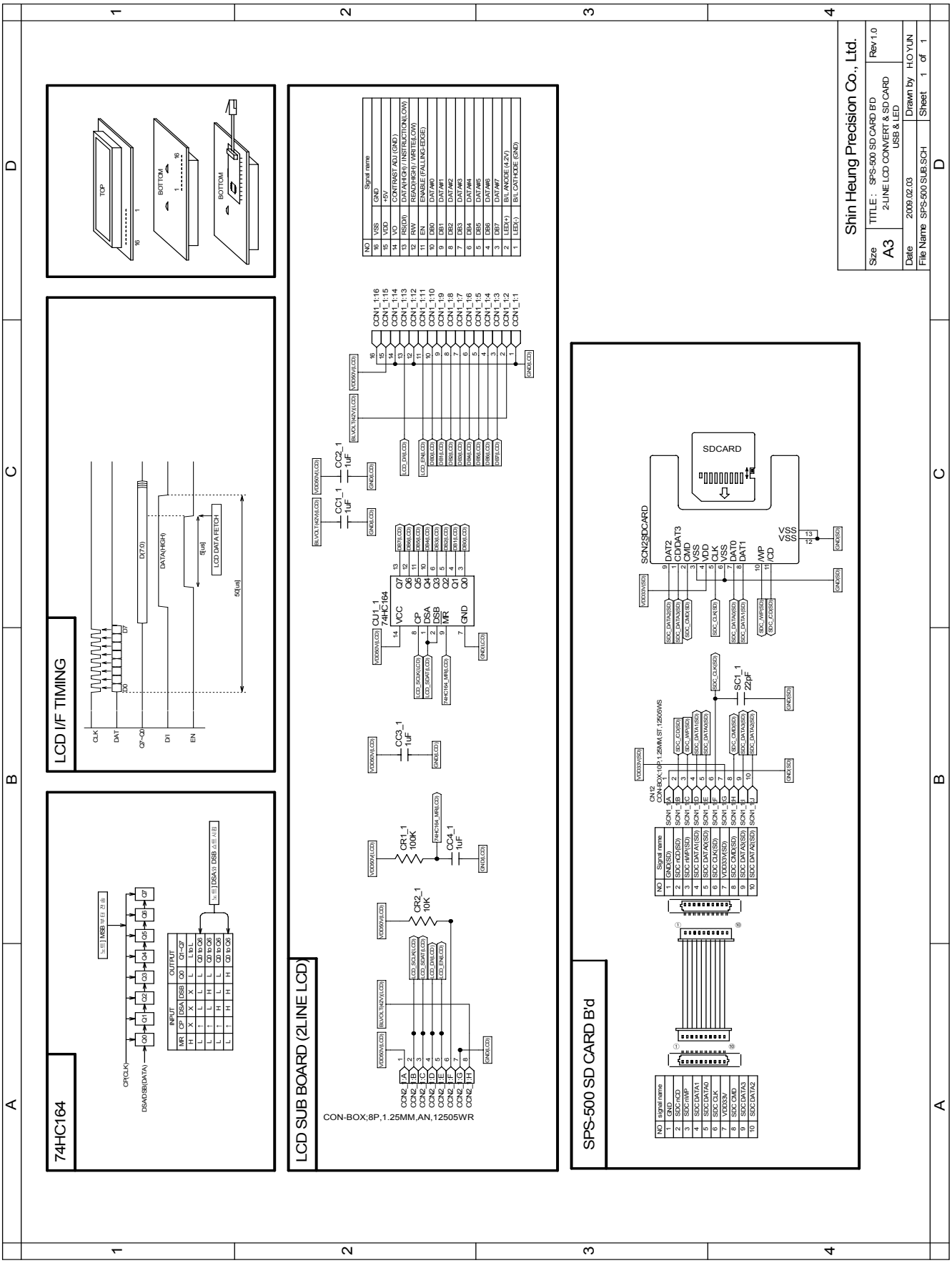
74HC164
LCD I/F TIMING
LCD SUB BOARD (2LINE LCD)
SPS-500 SD CARD B'd
CON-BOX;8P,1.25MM,AN,12505WR
SDCARD
Shin Heung Precision Co., Ltd.
TITLE : SPS-500 SD CARD B'D
2-LINE LCD CONVERT & SD CARD
USB & LED
Size A3
Rev 1.0
Date 2009.02.03
Drawn by H.O YUN
File Name SPS-500 SUB.SCH
Sheet 1 of 1

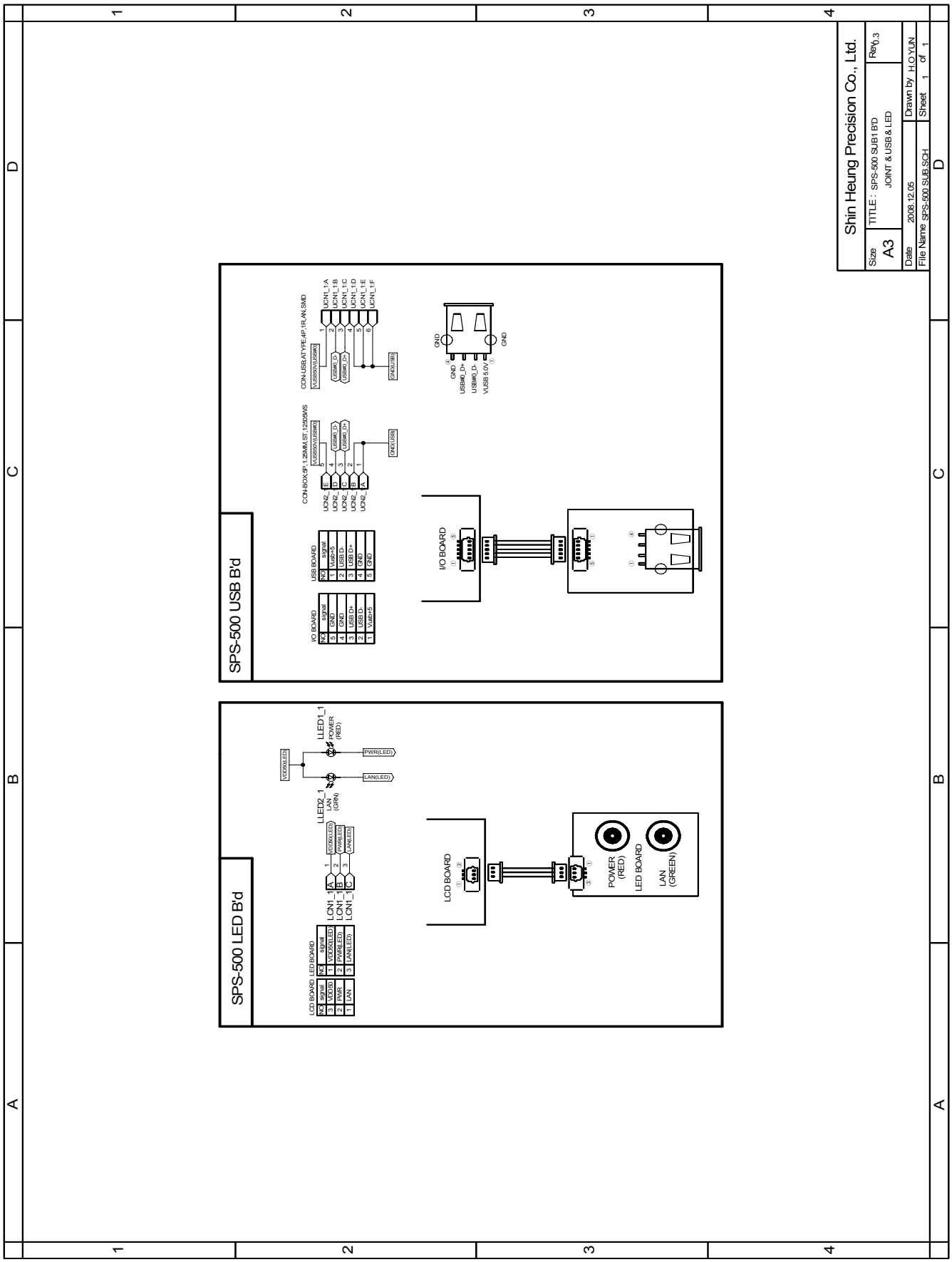
SPS-500 USB B'd
I/O BOARD
USB BOARD
CON-BOX,6P 1.25MM,ST 1250BWS
CON-USB,ATYPE,4P,1R,RN,SMD
I/O BOARD
LCD BOARD
POWER (RED)
LED BOARD
LAN (GREEN)
SPS-500 LED B'd
LCD BOARD
LED BOARD
LED1_1 POWER (RED)
LED2_1 LAN (GRN)
LCN1_1
LCN1_2
LCN1_3
PWR(LED)
LAN(LED)
Shin Heung Precision Co., Ltd.
Size A3
TITLE : SPS-500 SUB1 B'D
JOINT & USB & LED
Rev 0.3
Date 2008.12.05
Drawn by H.O.YUN
File Name SPS-500 SUB.SCH
Sheet 1 of 1

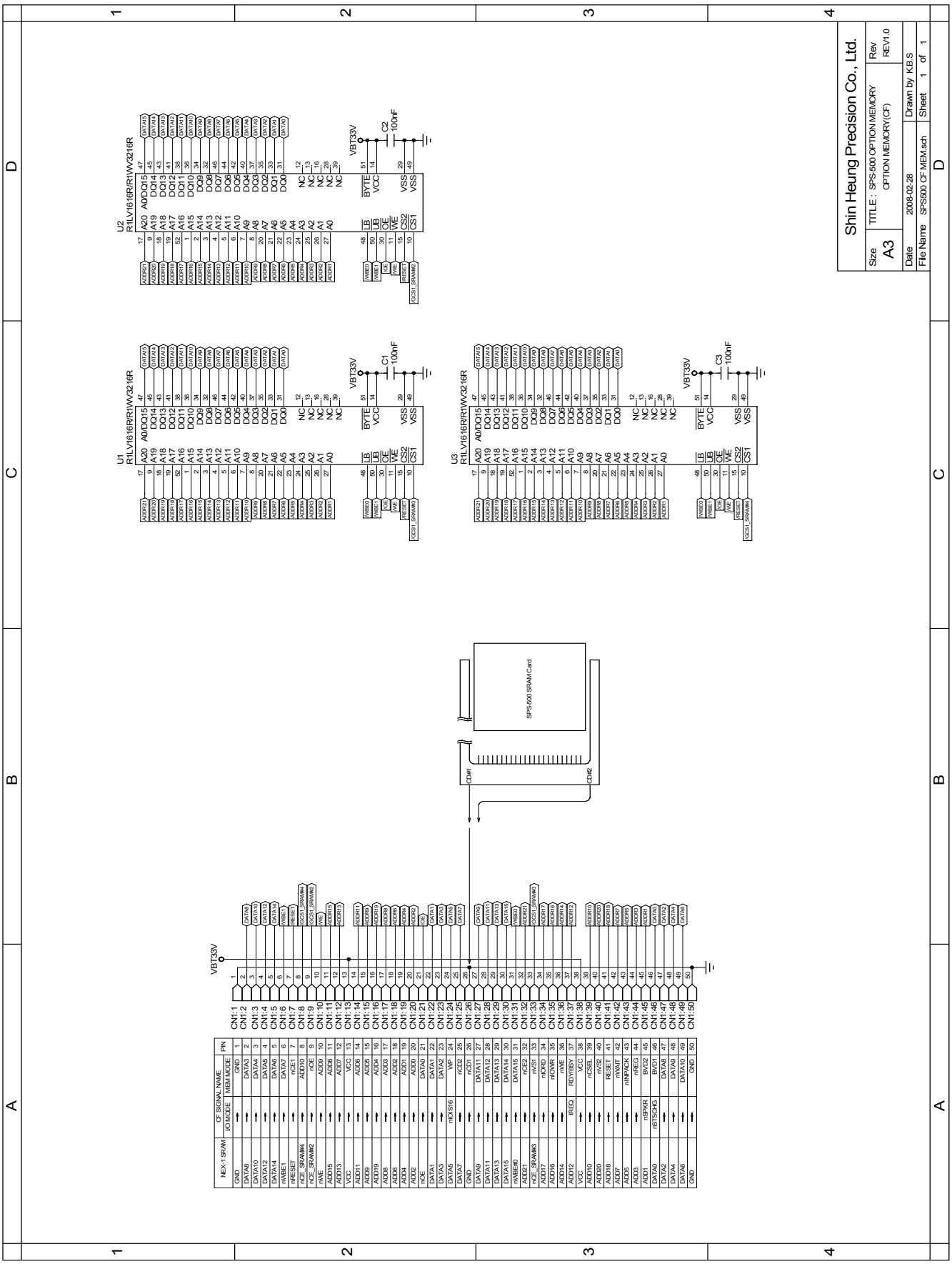
Shin Heung Precision Co., Ltd.
Size A3
TITLE : SPS-500 OPTION MEMORY
OPTION MEMORY(CF)
Rev REV1.0
Date 2008-02-28
Drawn by K.B.S
File Name SPS500 CF MEM.sch
Sheet 1 of 1
U1 R1LV1616R/R1WV3216R
U2 R1LV1616R/R1WV3216R
U3 R1LV1616R/R1WV3216R
SPS-500 SRAM Card
VBT33V
C1 100nF
C2 100nF
C3 100nF
CN1:1 CN1:2 CN1:3 CN1:4 CN1:5 CN1:6 CN1:7 CN1:8 CN1:9 CN1:10 CN1:11 CN1:12 CN1:13 CN1:14 CN1:15 CN1:16 CN1:17 CN1:18 CN1:19 CN1:20 CN1:21 CN1:22 CN1:23 CN1:24 CN1:25 CN1:26 CN1:27 CN1:28 CN1:29 CN1:30 CN1:31 CN1:32 CN1:33 CN1:34 CN1:35 CN1:36 CN1:37 CN1:38 CN1:39 CN1:40 CN1:41 CN1:42 CN1:43 CN1:44 CN1:45 CN1:46 CN1:47 CN1:48 CN1:49 CN1:50
NEX-1 SRAM | CF SIGNAL NAME I/O MODE | MEM MODE | PIN
GND | | GND | 1
DATA8 | | DATA3 | 2
DATA10 | | DATA4 | 3
DATA12 | | DATA5 | 4
DATA14 | | DATA6 | 5
nWE1 | | DATA7 | 6
nRESET | | nCE1 | 7
nCE_SRAM4 | | ADD10 | 8
nCE_SRAM2 | | nOE | 9
nWE | | ADD9 | 10
ADD15 | | ADD8 | 11
ADD13 | | ADD7 | 12
VCC | | VCC | 13
ADD11 | | ADD6 | 14
ADD9 | | ADD5 | 15
ADD19 | | ADD4 | 16
ADD8 | | ADD3 | 17
ADD6 | | ADD2 | 18
ADD4 | | ADD1 | 19
ADD2 | | ADD0 | 20
nCE | | DATA0 | 21
DATA1 | | DATA1 | 22
DATA3 | | DATA2 | 23
DATA5 | | VIP | 24
DATA7 | nDSI16 | nD32 | 25
GND | | nCD1 | 26
DATA9 | | DATA11 | 27
DATA11 | | DATA12 | 28
DATA13 | | DATA13 | 29
DATA15 | | DATA14 | 30
nWBE#0 | | DATA15 | 31
ADD21 | | nCE2 | 32
nCE_SRAM3 | | nVS1 | 33
ADD17 | | nDRD | 34
ADD16 | | nDWR | 35
ADD14 | | nWE | 36
ADD12 | | RDY/BSY | 37
VCC | IREQ | VCC | 38
ADD10 | | nCSEL | 39
ADD20 | | nVS2 | 40
ADD18 | | RESET | 41
ADD7 | | nWAIT | 42
ADD5 | | nINPACK | 43
ADD3 | | nREG | 44
ADD1 | nSPKR | BVD2 | 45
DATA0 | nSTSCHG | BVD1 | 46
DATA2 | | DATA8 | 47
DATA4 | | DATA9 | 48
DATA6 | | DATA10 | 49
GND | | GND | 50

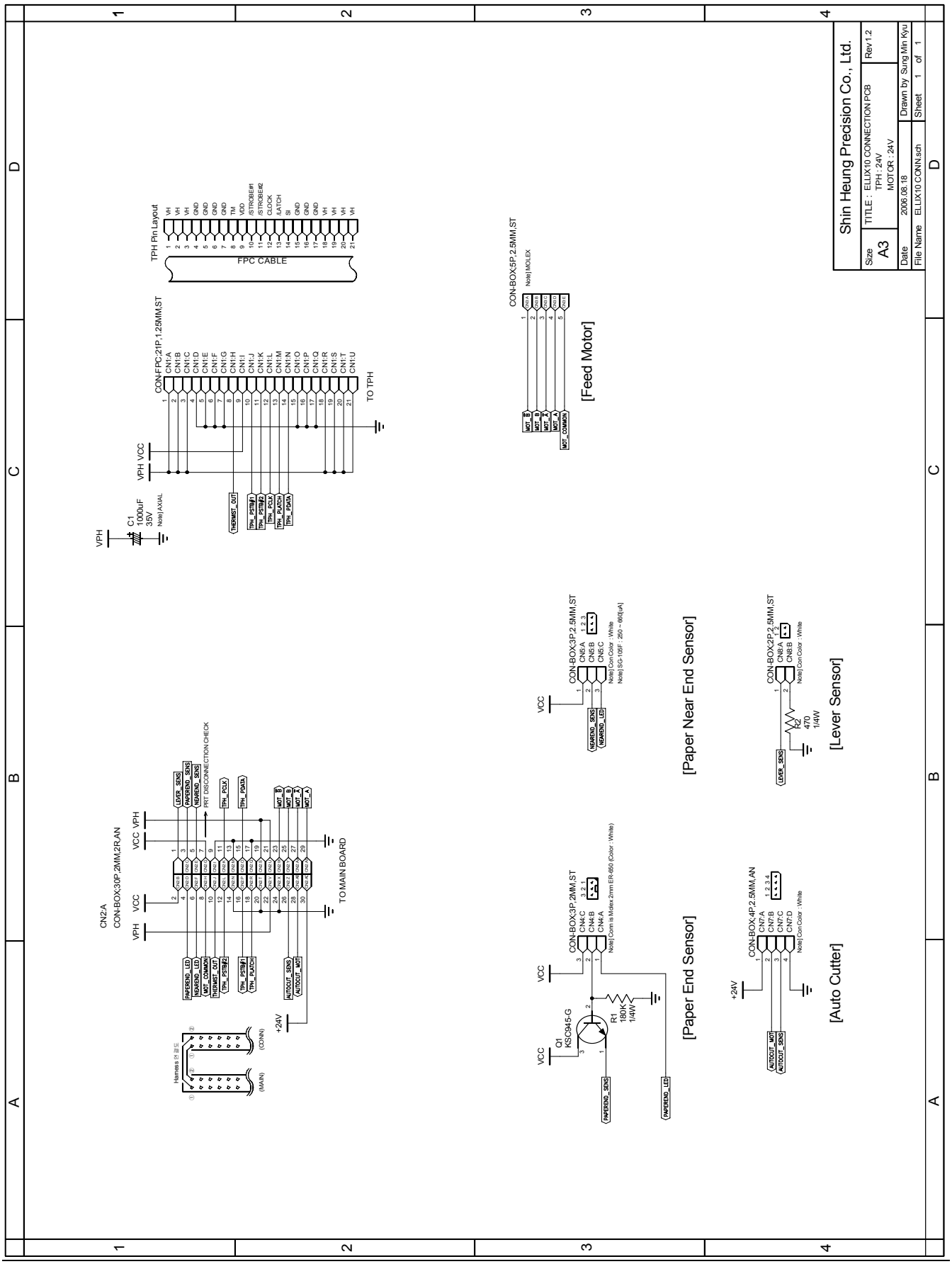
Shin Heung Precision Co., Ltd.
Size A3
TITLE : ELLIX10 CONNECTION PCB
TPH : 24V
MOTOR : 24V
Rev1.2
Date 2006.08.18
Drawn by Sung Min Kyu
File Name ELLIX10 CONN.sch
Sheet 1 of 1
TPH Pin Layout
FPC CABLE
CON-FPC;21P,1.25MM,ST
TO TPH
VPH VCC
VPH
C1 1000uF 35V
Note) AXIAL
CON-BOX;6P,2.5MM,ST
Note) MOLEX
[Feed Motor]
CN2;A
CON-BOX;30P,2MM,2R,AN
VCC VPH
VCC
VPH
PRT DISCONNECTION CHECK
TO MAIN BOARD
(MAIN)
(CONN)
+24V
CON-BOX;3P,2.5MM,ST
Note) Conn Color : White
Note) SG-105F : 250 ~ 860[uA]
[Paper Near End Sensor]
CON-BOX;3P,2MM,ST
Note) Conn is Molex 2mm ER-650 (Color : White)
Q1 KSC945-G
R1 180K 1/4W
[Paper End Sensor]
CON-BOX;2P,2.5MM,ST
Note) Conn Color : White
R2 470 1/4W
[Lever Sensor]
CON-BOX;4P,2.5MM,AN
Note) Conn Color : White
[Auto Cutter]

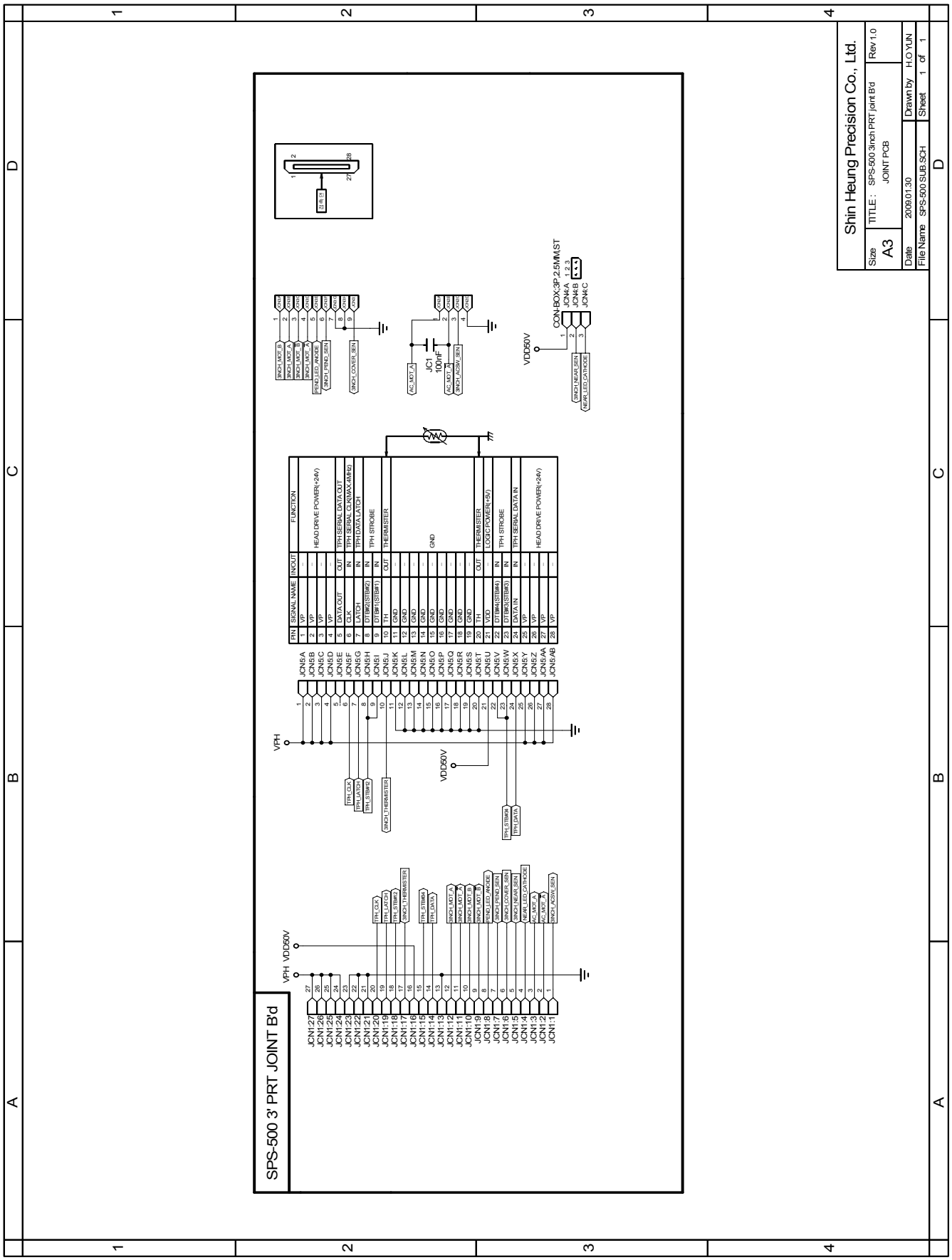
SPS-500 3' PRT JOINT B'd
Shin Heung Precision Co., Ltd.
TITLE : SPS-500 3inch PRT joint B'd
JOINT PCB
Size A3
Rev 1.0
Date 2009.01.30
Drawn by H.O YUN
File Name SPS-500 SUB.SCH
Sheet 1 of 1
VPH
VDD50V
CON-BOX-3P-2.5MM-ST
JC1 100nF

MEMO

UPDATE LOG

Application Date	Page	Part #	Notes (Cause & Solution)	S/Bulletin

Use this page to record any special servicing information such as Service Bulletins or Supplements.
When possible, record changes to Code numbers directly on the actual Parts List. Always record Service Bulletin numbers and Application Dates on this log to ensure that your data is always as current as possible.

SAM4S

Printed in KOREA

V1.1

Code No. : JK68-70127A