DAB
WATER•TECHNOLOGY

SUBMERSIBLE PUMPS

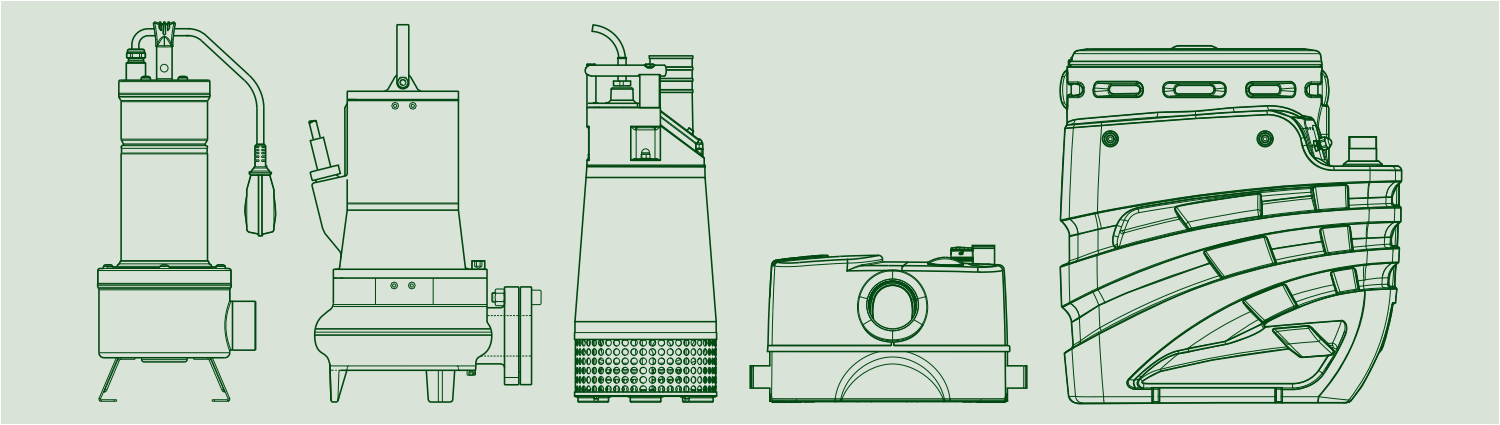

TECHNICAL CATALOGUE

IQNet®

THE INTERNATIONAL CERTIFICATION NETWORK

CERTIFICATE

IQNet and its partner
CISQ/IMQ-CSQ
hereby certify that the organization

DWT HOLDING SPA
VIA MARCO POLO 14 - 35035 MESTRINO (PD)
BRENDOLA (VI) - CASTELLO DI GODEGO (TV) - BIENTINA (PI) -
SAN GERMANO DEI BERICI (VI) - GESSATE (MI) -
PRC CHINA

for the following field of activities

Design, production, sale and assistance of components and electronic controls for pumps, electropumps, and pump sets for cold and hot water for civil, industrial and agricultural use

Refer to quality manual for details of applications to ISO 9001:2008 requirements

has implemented and maintains a

Quality Management System

which fulfills the requirements of the following standard

ISO 9001:2008

Issued on: 2013 - 09 - 23 Expiry date: 2015 - 06 - 15

Registration Number: IT - 824

Michael Drechsel
President of IQNET

Ing. Claudio Provetti
President of CISQ

IQNet Partners*:
AENOR *Spain* AFNOR Certification *France* AIB-Vincotte International *Belgium* ANCE-SIGE *Mexico* APCER *Portugal* CCC *Cyprus* CISQ *Italy* CQC *China* CQM *China* CQS *Czech Republic* Cro Cert *Croatia* DQS Holding GmbH *Germany* DS *Denmark* FCAV *Brazil* FONDONORMA *Venezuela* ICONTEC *Colombia* IMNC *Mexico* INNORPI *Tunisia* Inspecta Certification *Finland* IRAM *Argentina* JQA *Japan* KFQ *Korea* MIRTEC *Greece* MSZT *Hungary* Nemko AS *Norway* NSAI *Ireland* PCBC *Poland* Quality Austria *Austria* RR *Russia* SII *Israel* SIQ *Slovenia* SIRIM QAS International *Malaysia* SQS *Switzerland* SRAC *Romania* TEST St Petersburg *Russia* TSE *Turkey* YUQS *Serbia*
IQNet is represented in the USA by: AFNOR Certification, CISQ, DQS Holding GmbH and NSAI Inc.
* The list of IQNet partners is valid at the time of issue of this certificate. Updated information is available under www.iqnet-certification.com

All. 1 di 1
Ann. 1 of 1

CSQ
www.imq.it

CISQ is a member of IQNet
www.iqnet-certification.com

IQNet, the association of the world's first class certification bodies, is the largest provider of management System Certification in the world. IQNet is composed of more than 30 bodies and counts over 150 subsidiaries all over the globe.

ALLEGATO CERTIFICATO n. **9101.COGE**

ANNEX CERTIFICATE

(*) Unità Operative:
(*) Operative Units:

DAB PUMPS SPA
VIA BONANNO PISANO 1 - 56031 BIENTINA (PI)

TESLA SRL
VIA DEL LAVORO 3 - 36040 SAN GERMANO DEI BERICI (VI)

TESLA SRL
VIA BERGAMO 2 - 20060 GESSATE (MI)

DAB PUMPS QINGDAO CO. LTD.
40 KAITUO ROAD, QINGDAO DEVELOPMENT ZONE - SHANGDONG PROVINCE, PRC CHINA

DATE:	PRIMA CERTIFICAZIONE *FIRST CERTIFICATION*	EMISSIONE CORRENTE *CURRENT ISSUE*	SCADENZA *EXPIRY*
	1995-07-17	2013-09-23	2015-06-15

IMQ S.p.A. - VIA QUINTILIANO, 43 - 20138 MILANO

CISQ è la Federazione Italiana di Organismi di Certificazione dei sistemi di gestione aziendale.

CISQ is the Italian Federation of management system Certification Bodies.

FEDERAZIONE CISQ
www.cisq.com

ACCREDIA
EA: 18, 19

La validità del certificato è subordinata a sorveglianza annuale e riesame completo del Sistema di Gestione con periodicità triennale
The validity of the certificate is submitted to annual audit and a reassessment of the entire Management System within three years

CSQ
www.imq.it

CISQ is a member of IQNet
www.iqnet-certification.com

IQNet, the association of the world's first class certification bodies, is the largest provider of management System Certification in the world. IQNet is composed of more than 30 bodies and counts over 150 subsidiaries all over the globe.

CERTIFICATO N.
CERTIFICATE N. **9101.COGE**

SI CERTIFICA CHE IL SISTEMA QUALITA' DI
WE HEREBY CERTIFY THAT THE QUALITY SYSTEM OPERATED BY

DWT HOLDING SPA
VIA MARCO POLO 14 - 35035 MESTRINO (PD)

UNITA' OPERATIVE
OPERATIVE UNITS

DAB PUMPS
VIA MARCO POLO 14 - 35035 MESTRINO (PD)
DAB PUMPS
VIA EINAUDI 2 - 36040 BRENDOLA (VI)
DAB PUMPS
VIA E. FERMI 6-8-10 - 31030 CASTELLO DI GODEGO (TV)

Vedere gli Allegati per le altre Unità Operative (n° 1 pagina)
View the Annexes for the other Operative Units (n° 1 page)

E' CONFORME ALLA NORMA
IS IN COMPLIANCE WITH THE STANDARD

ISO 9001:2008

PER LE SEGUENTI ATTIVITA'
FOR THE FOLLOWING ACTIVITIES

Progettazione, produzione, vendita e assistenza di componenti e controlli elettronici per pompe, elettropompe e gruppi di pompaggio per acqua fredda e calda ad uso civile, industriale ed agricolo
Design, production, sale and assistance of components and electronic controls for pumps, electropumps, and pump sets for cold and hot water for civil, industrial and agricultural use

Riferirsi al manuale della qualità per l'applicabilità dei requisiti della norma ISO 9001:2008
Refer to quality manual for details of applications to ISO 9001:2008 requirements

IL PRESENTE CERTIFICATO E' SOGGETTO AL RISPETTO DEL REGOLAMENTO PER LA CERTIFICAZIONE DEI SISTEMI DI GESTIONE
THE USE AND THE VALIDITY OF THE CERTIFICATE SHALL SATISFY THE REQUIREMENTS OF THE RULES FOR CERTIFICATION OF MANAGEMENT SYSTEMS

DATE:	PRIMA CERTIFICAZIONE *FIRST CERTIFICATION*	EMISSIONE CORRENTE *CURRENT ISSUE*	SCADENZA *EXPIRY*
	1995-07-17	2013-09-23	2015-06-15

IMQ S.p.A. - VIA QUINTILIANO, 43 - 20138 MILANO

CISQ è la Federazione Italiana di Organismi di Certificazione dei sistemi di gestione aziendale.

CISQ is the Italian Federation of management system Certification Bodies.

FEDERAZIONE CISQ
www.cisq.com

ACCREDIA
EA: 18, 19

La validità del certificato è subordinata a sorveglianza annuale e riesame completo del Sistema di Gestione con periodicità triennale
The validity of the certificate is submitted to annual audit and a reassessment of the entire Management System within three years

CONTENTS

SUBMERSIBLE PUMPS

NOVA — PAGE 3

NOVA UP — PAGE 9

NOVA UP X — PAGE 12

NOVA UP MAE — PAGE 15

VERTY NOVA — PAGE 18

DRENAG 1000-1200 — PAGE 21

DRENAG 1400-1800 — PAGE 24

DRENAG 1600-2000-2500-3000 — PAGE 27

DIG 1100-1500-1800-2200 — PAGE 30

DIG 3700-5500-8500-11000 — PAGE 33

GRINDER 1000-1200-1600 — PAGE 36

GRINDER 1400-1800 — PAGE 39

FEKA 600 — PAGE 42

FEKA BVP — PAGE 46

FEKA GL 750-1000 — PAGE 49

FEKA VS — PAGE 52

FEKA VX — PAGE 55

FEKA 1400-1800 — PAGE 58

FEKA 2000 — PAGE 61

FKV — PAGE 64

FEKA 6000 — PAGE 75

FEKA 8000 — PAGE 78

SOCCORRER — PAGE 81

NOVAIR — PAGE 89

GENIX — PAGE 91

NOVABOX — PAGE 94

FEKABOX 110 — PAGE 96

FEKABOX 200 — PAGE 98

FEKAFOS 280 — PAGE 100

FEKAFOS 280 DOUBLE — PAGE 103

FEKAFOS 550 — PAGE 106

FEKAFOS 1200-2000-3800 — PAGE 109

ACCESSORIES – PANELS

PAGE 113

TECHNICAL APPENDIX

PAGE 133

TECHNICAL DATA

Operating range:
from 1 to 16 m^3/h, with head up to 10.2 metres.
Liquid temperature range:
from 0 °C to +35 °C for domestic use.
Pumped liquid: dirty water without fibres.
Particle size for free passage of solids through the suction grid:

NOVA 180 - NOVA 200	5 mm.
NOVA 300 - NOVA 600	10 mm.

Minimum draught depth:

NOVA 180 A	77 mm
NOVA 180 NA - NOVA 200	8 mm
NOVA 300	85 mm
NOVA 600 A	175 mm
NOVA 600 NA	38 mm

Max. immersion depth: 7 metres.
Maximum dry run time: 1 minute.
Protection class: IP 68.
Insulation class: F.

APPLICATIONS

The submersible pump of the NOVA range is suitable for automatically operated fixed domestic applications for draining basements and garages that are subject to flooding.

Thanks to its compact, easy to handle shape, it may also be used as a portable pump for emergencies such as lifting water from tanks or rivers, emptying swimming pools, fountains, excavations, and pedestrian subways. It is also ideal for gardening, and hobby applications in general.
The level switch allows fixed installation, ensuring automatic operation.
Version with special stainless steel pump shaft also available (SV).

CONSTRUCTION FEATURES OF THE PUMP

Hydro resistant technopolymer pump body, cover, and suction grid.
Stainless steel motor, roto shaft, and bolts and screws.
Threefold seal with interposed rings with oil pre-chamber.

CONSTRUCTION FEATURES OF THE MOTOR

Submersible type continuous duty asynchronous motor.
Stator enclosed in airtight stainless steel casing, with an outer cover that protects the wiring and the capacitor.
Rotor running on permanently lubricated ball bearings, oversized to ensure low noise and durability.
Standard built-in thermo-amperometric protection. Capacitor permanently fitted on single phase versions.
For the protection of the three-phase motor, we recommend the use of remote overload cut-outs, in compliance with local regulations.

Construction according to CEI 2-3 and CEI 61-69 (EN 60335-2-41).

Standard voltage:	single-phase	220-240 V / 50 Hz
	three-phase	400 V / 50 Hz

Standard cables for the single-phase version:

5 metre H05 RN-F for	NOVA 180 M-A NOVA 300 M-A NOVA 600 M-A
10 metre H05 RN-F for	NOVA 180 M-A NOVA 200 M-NA
10 metre H07 RN-F for	NOVA 600 M-A

Standard plug for the single-phase version: SCHUKO CEE 7 - VII - UNEL 47166-68

Standard cables for the three-phase version: 5 metres H07 RN-F

DAB PUMPS reserves the right to make modifications without notice.

MATERIALS

N.	PARTS*		MATERIALS
1	PUMP BODY		TECHNOPOLYMER
4	IMPELLER		TECHNOPOLYMER
29	OR RING		NBR
32	STOP RING		12E - UNI 7435 RUST-PROOF
54	MOTOR	CASE	AISI 304 STAINLESS STEEL X5 CrNi 1810 - UNI 6900/71
		ROTOR SHAFT	AISI 416 STAINLESS STEEL X12 CrS13 - UNI 6900/71
			FOR SV VERSION SHAFT IN AISI 431 STAINLESS STEEL
78	ADJUSTMENT RING		TECHNOPOLYMER
79	SUCTION GRID		TECHNOPOLYMER
83	FLOAT		TECHNOPOLYMER

* In contact with the liquid

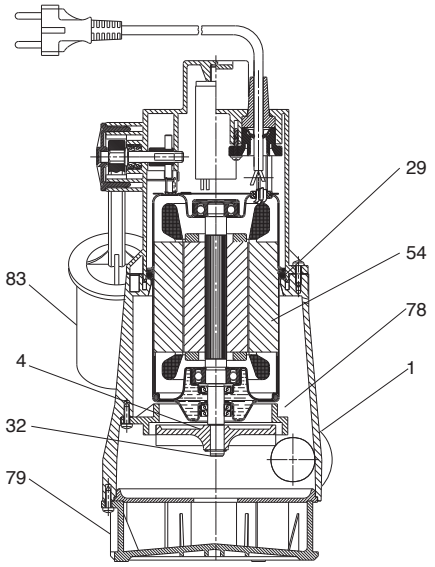

MODEL	WITH FLOAT (A)	WITHOUT FLOAT (NA)
NOVA 180	YES	YES
NOVA 200	NO	YES
NOVA 300	YES	NO
NOVA 600	YES	YES

MINIMUM WELL SIZE FOR AUTOMATIC OPERATION FIXED INSTALLATION:

NOVA 180 - NOVA 300

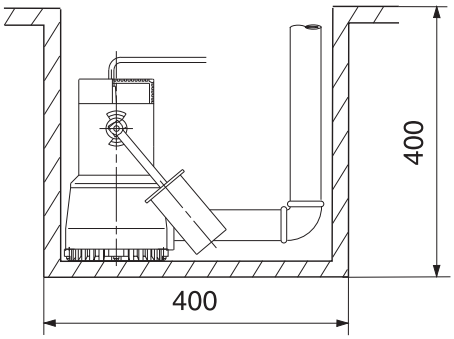

NOVA 600

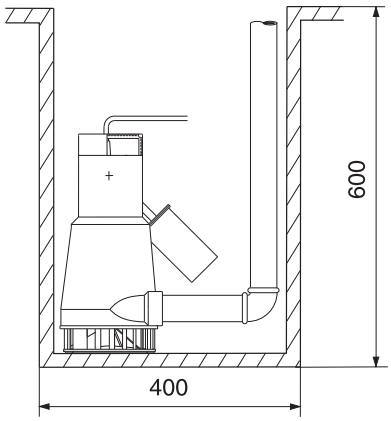

PERFORMANCE RANGE

The performance curves are based on kinematic viscosity values = 1 mm²/s and density equal to 1000 kg/m³. Curve tolerance according to ISO 9906.

GRAPHIC SELECTION TABLE

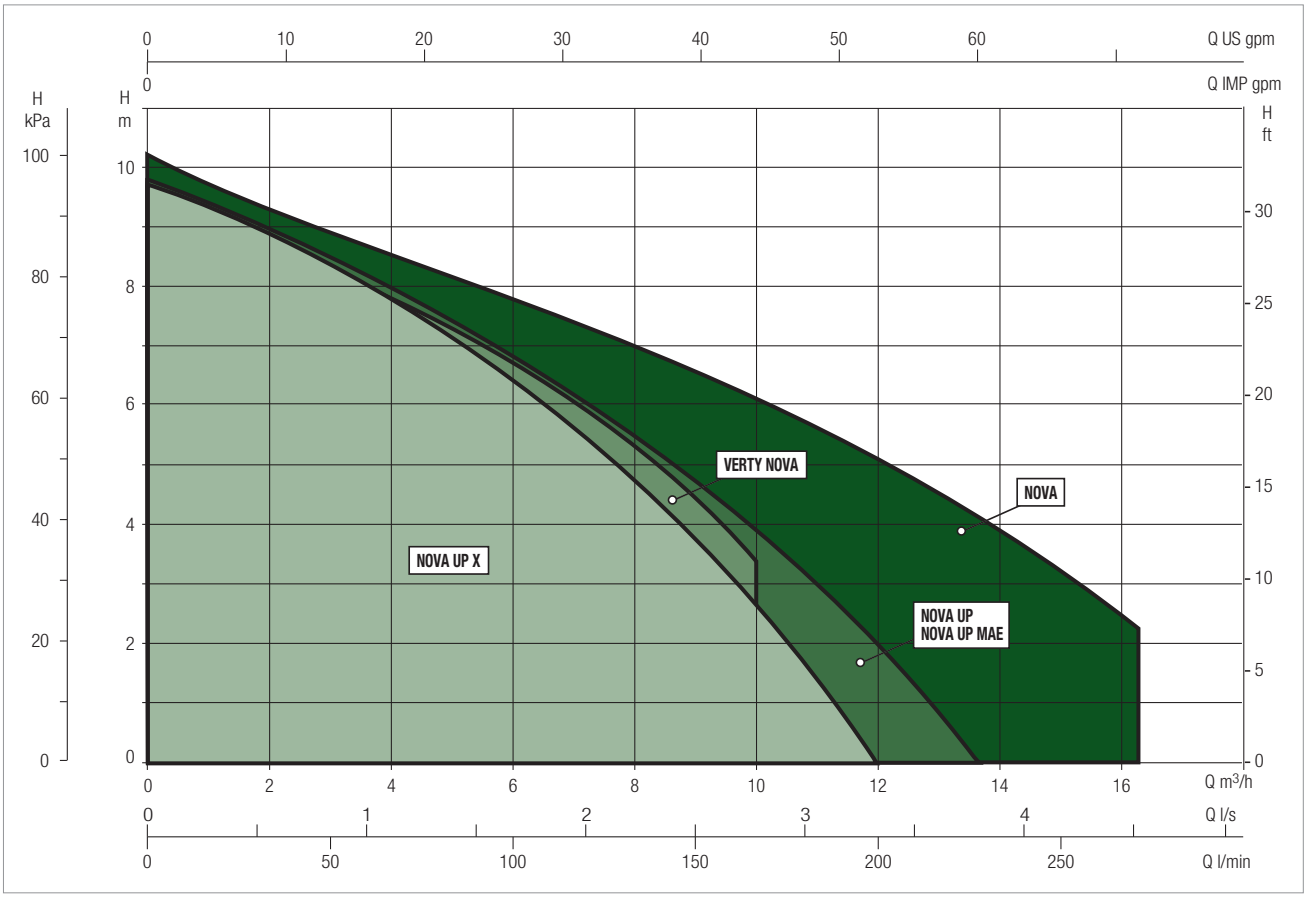

SELECTION TABLE - NOVA

MODEL	Q= m³/h	0	1	2	3	4.5	5	6	7	7.5	9	10	12	13.5	15
	Q=l/min	0	16.6	33.3	50	75	83.3	100	116.6	125	150	166.6	200	225	250
NOVA 180 M	H (m)	4.95	4.45	3.9	3.15	1.7	1.15								
NOVA 300 M		7.18	6.7	6.23	5.8	5.2	5	4.6	4.2	4	3.42	3	2.2		
NOVA 600 M-T		10.2	9.7	9.3	8.9	8.3	8.1	7.8	7.4	7.2	6.6	6.1	5	4.1	3.1

DAB PUMPS reserves the right to make modifications without notice.

NOVA 180 - CLEAN WATER DRAINING SUBMERSIBLE PUMPS FOR DOMESTIC USE

Liquid temperature range: from 0 °C to +35 °C for domestic use

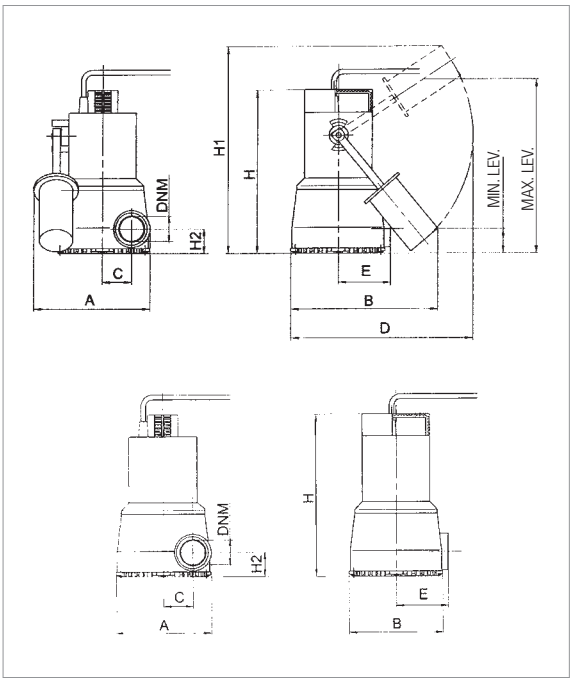

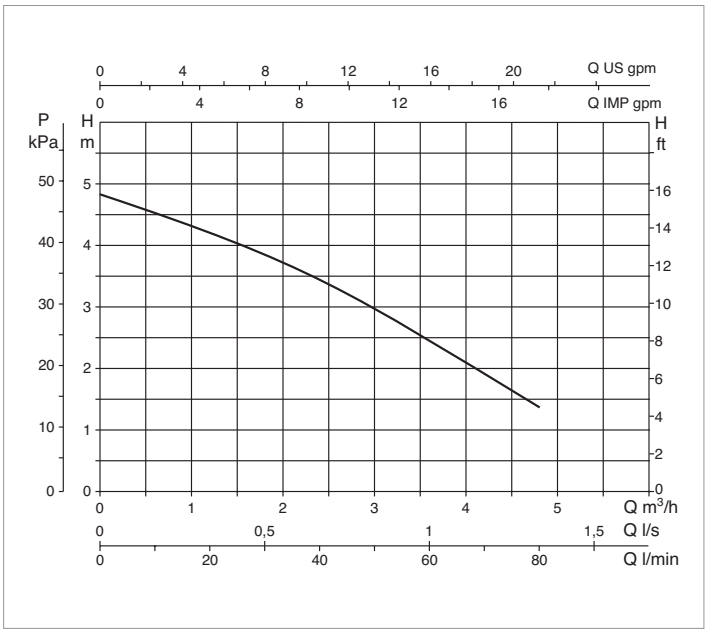

The performance curves are based on kinematic viscosity values = 1 mm²/s and density equal to 1000 kg/m³. Curve tolerance according to ISO 9906.

MODEL	ELECTRICAL DATA						
	POWER INPUT 50 Hz	P1 MAX kW	P2 NOMINAL		In A	CAPACITOR	
			kW	HP		µF	Vc
NOVA 180 M-A	1 x 220 - 240 V ~	0.19	0.2	0.28	0.9	5	450
NOVA 180 M-A - SV*	1 x 220 - 240 V ~	0.19	0.2	0.28	0.9	5	450
NOVA 180 M-NA - SV*	1 x 220 - 240 V ~	0.19	0.2	0.28	0.9	5	450

A: Automatic with float - NA: Non-automatic, without float
* With special stainless steel pump shaft

MODEL	A	B	C	D	E	H	H1	H2	LEV. MIN.	LEV. MAX.	DNM GAS	PACKING DIMENSIONS			CABLE	VOLUME (m³)	WEIGHT kg
												L/A	L/B	H			
NOVA 180 M-A	181	235	46	296	82	253	345	38	77	277	1¼"	287	202	320	5 mt.	0.019	4.6
NOVA 180 M-NA	148	148	46	-	82	253	-	38	-	-	1¼"	287	202	320	10 mt.	0.019	4.6
NOVA 180 M-A SV*	181	235	46	296	82	253	345	38	77	277	1¼"	287	202	320	5 mt.	0.019	4.6
NOVA 180 M-NA SV*	148	148	46	–	82	253	–	38	–	–	1¼"	287	202	320	10 mt.	0.019	4.5

NOVA 200 / NOVA 300 - CLEAN WATER DRAINING SUBMERSIBLE PUMPS FOR DOMESTIC USE

Liquid temperature range: from 0 °C to +35 °C for domestic use

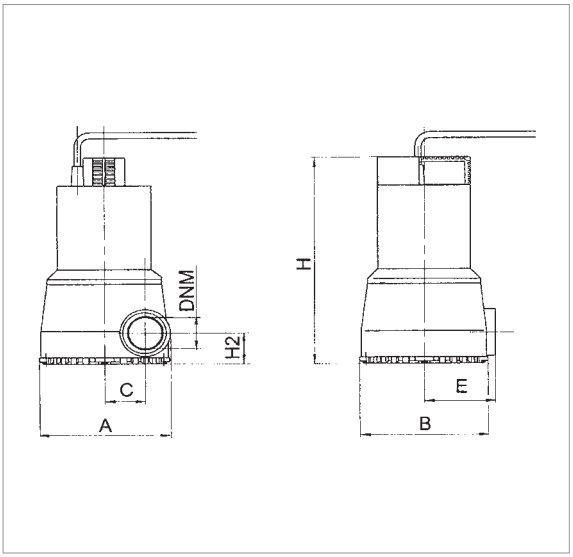

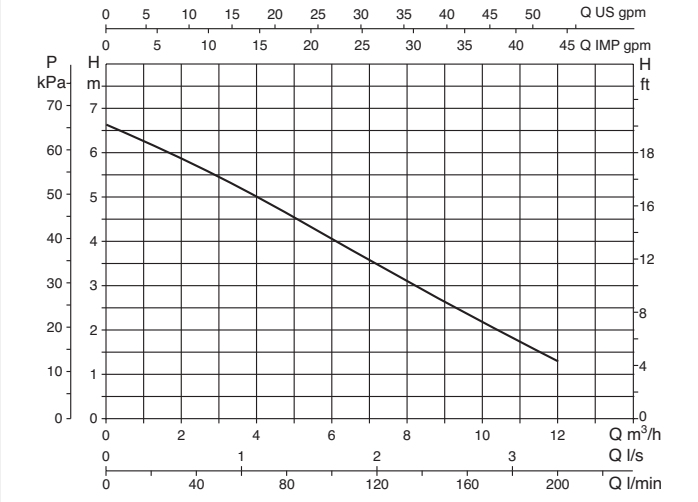

The performance curves are based on kinematic viscosity values = 1 mm²/s and density equal to 1000 kg/m³. Curve tolerance according to ISO 9906.

MODEL	ELECTRICAL DATA						
	POWER INPUT 50 Hz	P1 MAX kW	P2 NOMINAL		In A	CAPACITOR	
			kW	HP		µF	Vc
NOVA 200 M-NA - SV*	1 x 220 - 240 V ~	0.35	0.22	0.3	1.5	8	450

NA: Non-automatic, without float
* With special stainless steel pump shaft

MODEL	A	B	C	D	E	H	H1	H2	LEV. MIN.	LEV. MAX.	DNM GAS	PACKING DIMENSIONS			CABLE	VOLUME (m³)	WEIGHT kg
												L/A	L/B	H			
NOVA 200 M-NA - SV*	148	148	46	–	82	253	–	38	–	–	1¼"	287	202	320	10 mt.	0.019	4.5

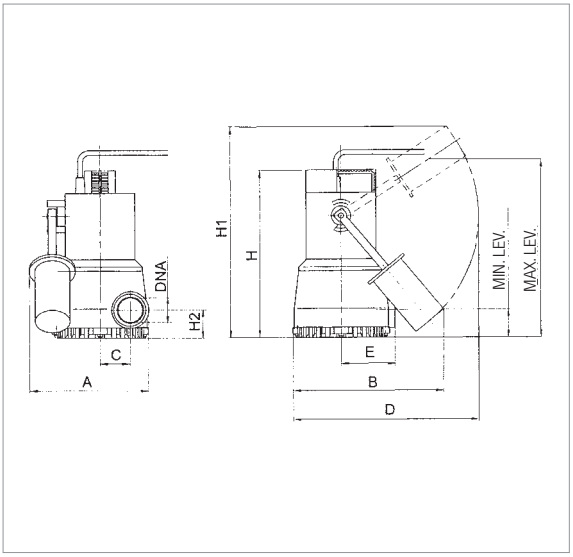

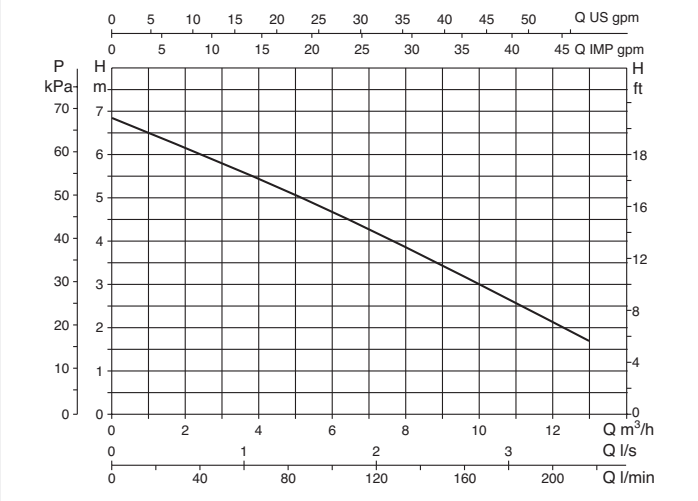

The performance curves are based on kinematic viscosity values = 1 mm²/s and density equal to 1000 kg/m³. Curve tolerance according to ISO 9906.

MODEL	ELECTRICAL DATA						
	POWER INPUT 50 Hz	P1 MAX kW	P2 NOMINAL		In A	CAPACITOR	
			kW	HP		µF	Vc
NOVA 300 M-A	1 x 220 - 240 V ~	0.35	0.22	0.3	1.6	8	450
NOVA 300 M-A - SV*	1 x 220 - 240 V ~	0.35	0.22	0.3	1.6	8	450

A: Automatic with float - NA: Non-automatic, without float
* With special stainless steel pump shaft

MODEL	A	B	C	D	E	H	H1	H2	LEV. MIN.	LEV. MAX.	DNM GAS	PACKING DIMENSIONS			CABLE	VOLUME (m³)	WEIGHT kg
												L/A	L/B	H			
NOVA 300 M-A	181	235	46	296	82	262	354	47	85	285	1¼"G	287	202	320	5 mt.	0.019	4.6
NOVA 300 M-A - SV*	181	235	46	296	82	262	354	47	85	285	1¼"G	287	202	320	10 mt.	0.019	4.6

NOVA 600 - CLEAN WATER DRAINING SUBMERSIBLE PUMPS FOR DOMESTIC USE

Liquid temperature range: from 0 °C to +35 °C for domestic use

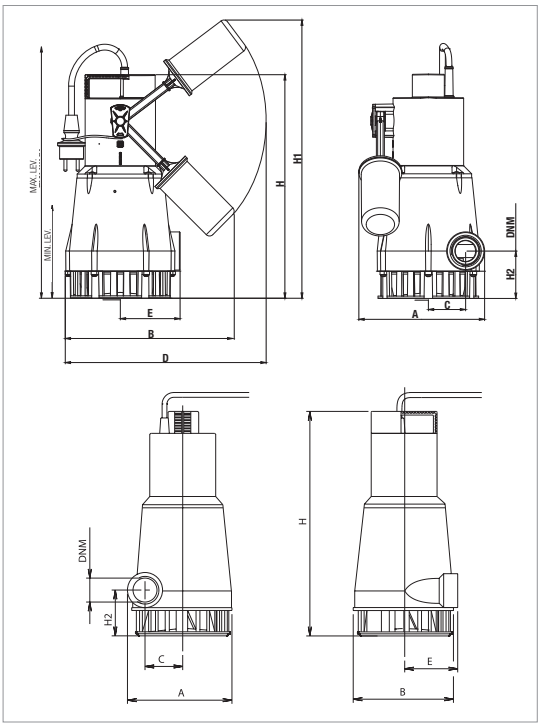

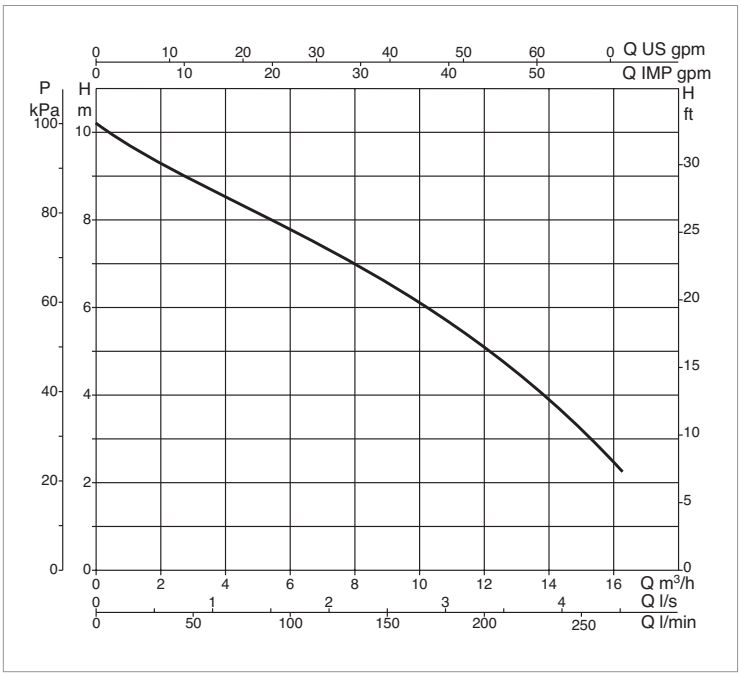

The performance curves are based on kinematic viscosity values = 1 mm²/s and density equal to 1000 kg/m³. Curve tolerance according to ISO 9906.

MODEL	ELECTRICAL DATA						
	POWER INPUT 50 Hz	P1 MAX kW	P2 NOMINAL		In A	CAPACITOR	
			kW	HP		µF	Vc
NOVA 600 M-A	1 x 220 - 240 V ~	0.80	0.55	0.75	3.4	14	450
NOVA 600 T-NA	3 x 400 V ~	0.80	0.55	0.75	1.6	-	-
NOVA 600 M-A - SV*	1 x 220 - 240 V ~	0.80	0.55	0.75	3.4	14	450
NOVA 600 M-NA - SV*	1 x 220 - 240 V ~	0.80	0.55	0.75	3.4	14	450
NOVA 600 T-NA - SV*	3 x 400 V ~	0.80	0.55	0.75	1.6	-	-

A: Automatic with float - NA: Non-automatic, without float
* With special stainless steel pump shaft

MODEL	A	B	C	D	E	H	H1	H2	LEV. MIN.	LEV. MAX.	DNM GAS	PACKING DIMENSIONS			CABLE	VOLUME (m³)	WEIGHT kg
												L/A	L/B	H			
NOVA 600 M-A	193	235	56	296	90	334	443	73	190	390	1¼"	287	202	431	5 mt.	0.025	7
NOVA 600 (M-T)-NA	162	160	56	–	90	334	–	73	–	–	1¼"	287	202	431	10 mt.	0.025	6.7
NOVA 600 M-A - SV*	193	235	56	296	90	334	443	73	190	390	1¼"	287	202	431	5 mt.	0.025	7
NOVA 600 (M-T)-NA SV*	162	160	56	–	90	334	–	73	–	–	1¼"	287	202	431	10 mt.	0.025	6.7

NOVA UP

SUBMERSIBLE PUMPS

TECHNICAL DATA

Operating range:
from 1 to 15 m^3/h with head up to 10 metres.
Liquid temperature range:
from 0 °C to +35 °C for domestic use.
Pumped liquid: dirty water without fibres.
Minimum draught depth:

NOVA UP 300 M-A	120 mm
NOVA UP 300 M-NA	60 mm
NOVA UP 600 M-A	165 mm
NOVA UP 600 M-NA	70 mm

Max. immersion depth: 7 metres.
Installation: vertical, fixed or portable.
Protection class: IP 68.
Insulation class: F.

APPLICATIONS

The vertical delivery draining submersible pump is suitable for domestic automatically operated fixed applications, for draining basements and garages that are subject to flooding. Thanks to its compact, easy to handle shape, it may also be used as a portable pump for emergencies such as lifting water from tanks or rivers, emptying swimming pools, fountains, excavations, and pedestrian subways. It is also ideal for gardening, and hobby applications in general. This pump can be used with liquids containing solid particles of up to 10 mm in size. The level switch allows fixed installation, ensuring automatic operation. With removable filter, it is capable of suction of up to a minimum of 2/3 mm (filter removed).

CONSTRUCTION FEATURES OF THE PUMP

Hydro resistant technopolymer pump body, cover, and suction grid.
Stainless steel motor, roto shaft, and bolts and screws.
Threefold seal with interposed rings with oil pre-chamber.

CONSTRUCTION FEATURES OF THE MOTOR

Submersible type continuous duty asynchronous motor.
Stator enclosed in airtight stainless steel casing, with an outer cover that protects the wiring and the capacitor. Rotor running on permanently lubricated ball bearings, oversized to ensure low noise and durability. Built-in thermal-amperometric protection and permanently connected capacitor.

MATERIALS

N.	PARTS*		MATERIALS
1	SUCTION STRAINER		TECHNOPOLYMER
2	BASE		TECHNOPOLYMER
3	IMPELLER		TECHNOPOLYMER
4	NUT		A2 DIN982-UNI7473 STAINLESS STEEL
5	WASHER		A2 STAINLESS STEEL
6	V. RING		NBR
7	MOTOR	CASE	ALUMINIUM
		ROTOR SHAFT	AISI 416 STAINLESS STEEL UNI EN 10088-1 X12CRS13
8	DIAPHRAGM		TECHNOPOLYMER
9	BODY		TECHNOPOLYMER
10	OR RING		NBR

* In contact with the liquid

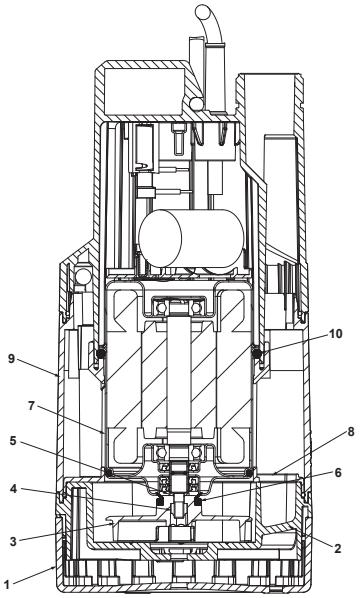

PERFORMANCE RANGE

The performance curves are based on kinematic viscosity values = 1 mm²/s and density equal to 1000 kg/m³. Curve tolerance according to ISO 9906.

GRAPHIC SELECTION TABLE

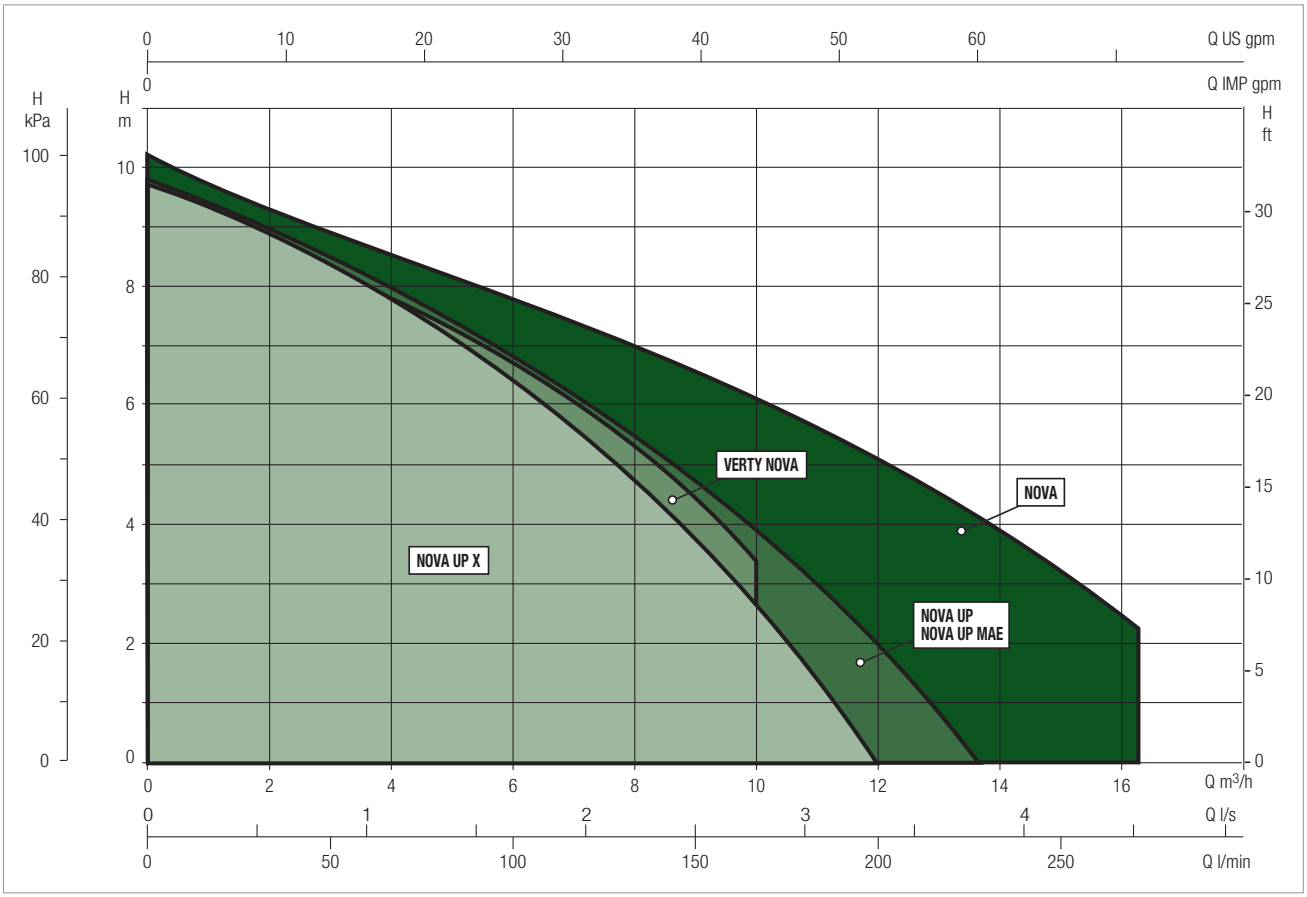

SELECTION TABLE - NOVA UP

MODEL	Q= m³/h	0	1	2	3	4.5	5	6	7	7.5	9	10	12	13.5	15
	Q=l/min	0	16.6	33.3	50	75	83.3	100	116.6	125	150	166.6	200	225	250
NOVA UP 300 M	H (m)	7.6	6.9	6.25	5.6	4.7	4.4	3.6	2.8	2.3	1				
NOVA UP 600 M		9.8	9.4	9	8.5	7.7	7.4	6.8	6.2	5.9	4.7	3.9	2	0.3	

NOVA UP - CLEAN WATER DRAINING SUBMERSIBLE PUMPS FOR DOMESTIC USE

Liquid temperature range: from 0 °C to +35 °C for domestic use

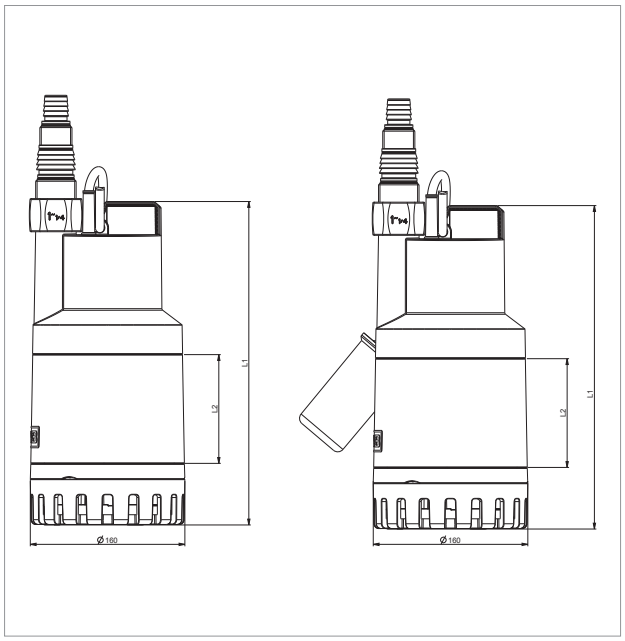

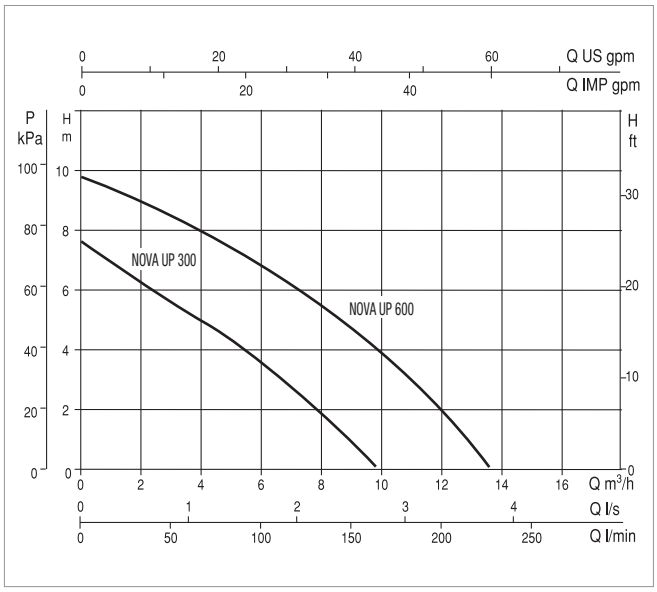

The performance curves are based on kinematic viscosity values = 1 mm^2/s and density equal to 1000 kg/m^3. Curve tolerance according to ISO 9906.

MODEL	ELECTRICAL DATA				
	POWER INPUT 50 Hz	P1 MAX kW	P2 NOMINAL		In A
			kW	HP	
NOVA UP 300 M-A	1 x 220 - 240 V ~	0.38	0.21	0.28	1.5
NOVA UP 300 M-NA	1 x 220 - 240 V ~	0.38	0.21	0.28	1.5
NOVA UP 600 M-A	1 x 220 - 240 V ~	0.77	0.52	0.69	3.5
NOVA UP 600 M-NA	1 x 220 - 240 V ~	0.77	0.52	0.69	3.5

MODEL	L1	L2	DNM GAS	PACKING DIMENSIONS			CABLE	VOLUME (m^3)	WEIGHT kg
				L/A	L/B	H			
NOVA UP 300 M-A	296	75.9	1" ¼	265	225	317	10 mt.	0.018	5.8
NOVA UP 300 M-NA	296	111.6	1" ¼	265	225	317	10 mt.	0.018	5.6
NOVA UP 600 M-A	332	111.6	1" ¼	265	225	352	10 mt.	0.021	7.3
NOVA UP 600 M-NA	332	75.9	1" ¼	265	225	352	10 mt.	0.021	7.1

DAB PUMPS reserves the right to make modifications without notice.

NOVA UP X

SUBMERSIBLE PUMPS

TECHNICAL DATA

Operating range:
from 1 to 15 m^3/h with head up to 10 metres.
Liquid temperature range:
from 0 °C to +35 °C for domestic use.
Pumped liquid: dirty water without fibres.
Minimum draught depth:

NOVA UP X 300 M-NA	70 mm
NOVA UP X 600 M-NA	80 mm

Max. immersion depth: 7 metres.
Installation: vertical, fixed or portable.
Protection class: IP 68.
Insulation class: F.

APPLICATIONS

The submersible pump with port for connection to the suction kit with float is suitable for use in rain water recovery system tanks, as well as other tank applications.

CONSTRUCTION FEATURES OF THE PUMP

Hydro resistant technopolymer pump body, cover, and suction grid.
Stainless steel motor, roto shaft, and bolts and screws.
Threefold seal with interposed rings with oil pre-chamber.

CONSTRUCTION FEATURES OF THE MOTOR

Submersible type continuous duty asynchronous motor.
Stator enclosed in airtight stainless steel casing, with an outer cover that protects the wiring and the capacitor. Rotor running on permanently lubricated ball bearings, oversized to ensure low noise and durability. Built-in thermal-amperometric protection and permanently connected capacitor.

MATERIALS

N.	PARTS*		MATERIALS
1	BASE		TECHNOPOLYMER
2	OR RING		NBR
3	IMPELLER		TECHNOPOLYMER
4	NUT		A2 DIN982-UNI7473 STAINLESS STEEL
5	WASHER		A2 STAINLESS STEEL
6	V. RING		NBR
7	MOTOR	CASE	ALUMINIUM
		ROTOR SHAFT	AISI 416 STAINLESS STEEL UNI EN 10088-1 X12CRS13
8	DIAPHRAGM		TECHNOPOLYMER
9	BODY		TECHNOPOLYMER
10	OR RING		NBR

* In contact with the liquid

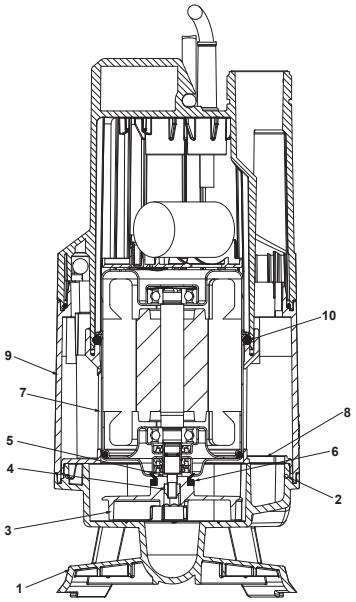

PERFORMANCE RANGE

The performance curves are based on kinematic viscosity values = 1 mm²/s and density equal to 1000 kg/m³. Curve tolerance according to ISO 9906.

GRAPHIC SELECTION TABLE

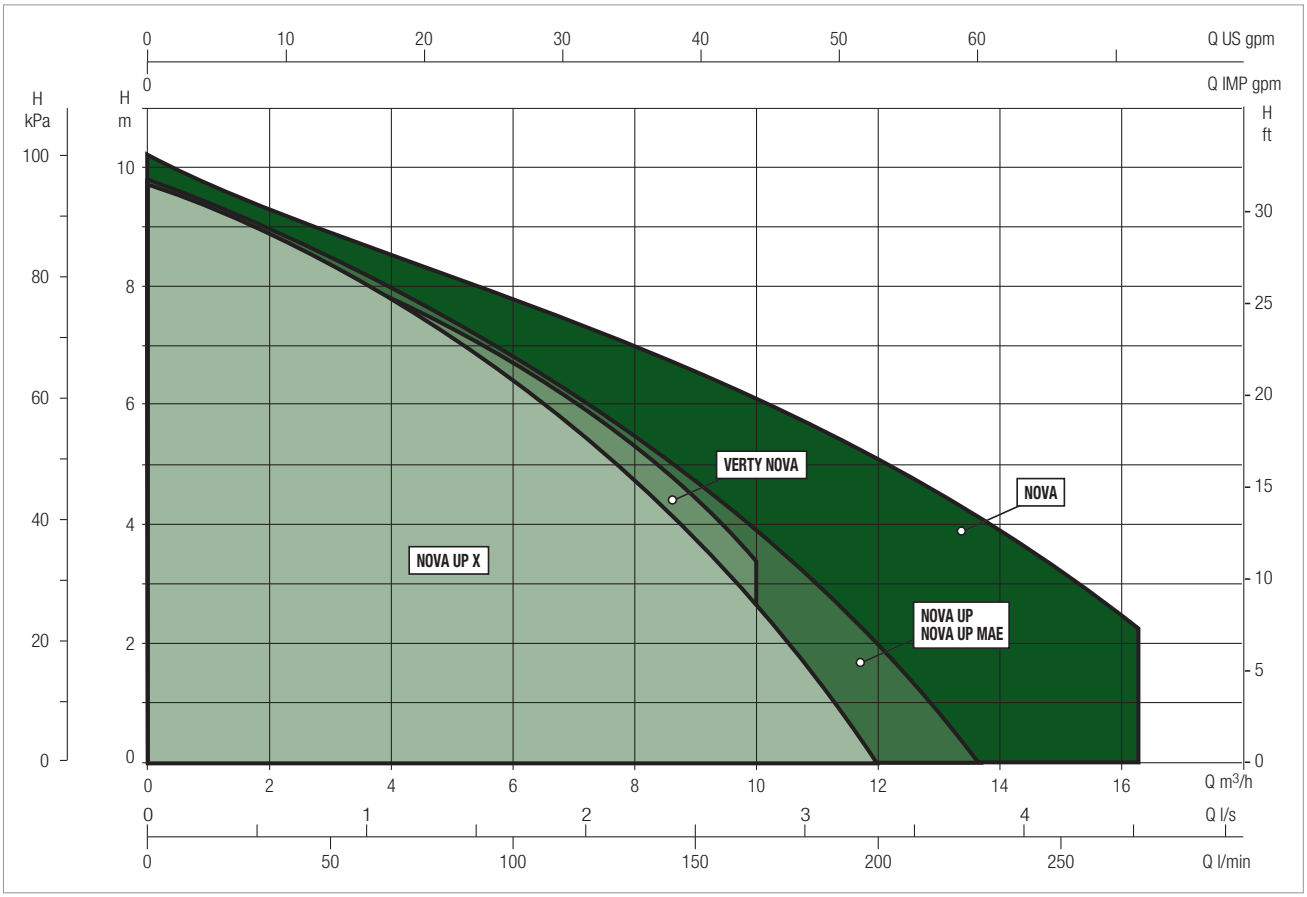

SELECTION TABLE - NOVA UP X

MODEL	Q= m³/h	0	1	2	3	4.5	5	6	7	7.5	9	10	12	13.5	15
	Q=l/min	0	16.6	33.3	50	75	83.3	100	116.6	125	150	166.6	200	225	250
NOVA UP X 300 M	H (m)	7.1	6.2	5.5	4.8	3.7	3.3	2.5	1.6	1					
NOVA UP X 600 M		9.7	9.4	8.9	8.4	7.5	7.2	6.5	5.6	5.1	3.7	2.5			

DAB PUMPS reserves the right to make modifications without notice.

NOVA UP X - CLEAN WATER DRAINING SUBMERSIBLE PUMPS FOR DOMESTIC USE

Liquid temperature range: from 0 °C to +35 °C for domestic use

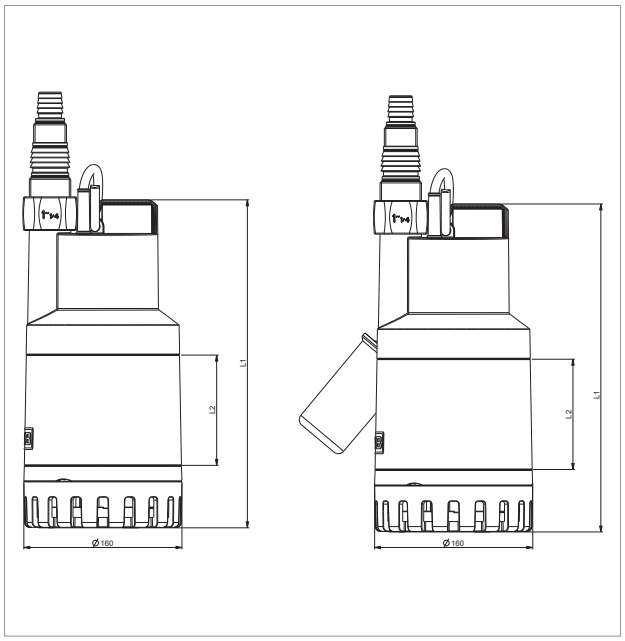

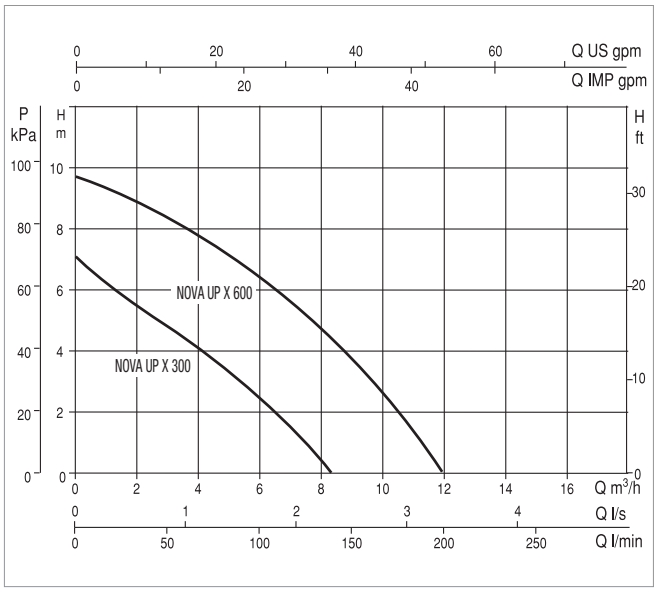

The performance curves are based on kinematic viscosity values = 1 mm²/s and density equal to 1000 kg/m³. Curve tolerance according to ISO 9906.

MODEL	ELECTRICAL DATA				
	POWER INPUT 50 Hz	P1 MAX kW	P2 NOMINAL		In A
			kW	HP	
NOVA UP X 300 M-A	1 x 220 - 240 V ~	0.77	0.52	0.69	3.5
NOVA UP X 600 M-NA	1 x 220 - 240 V ~	0.77	0.52	0.69	3.5

MODEL	L1	L2	DNM GAS	PACKING DIMENSIONS			CABLE	VOLUME (m³)	WEIGHT kg
				L/A	L/B	H			
NOVA UP X 300 M-A	313	268	1" ¼	198	198	415	10 mt.	0.018	5.6
NOVA UP X 600 M-NA	350	332	1" ¼	198	198	415	10 mt.	0.021	7.1

NOVA UP MAE

SUBMERSIBLE PUMPS

TECHNICAL DATA

Operating range:
from 1 to 15 m^3/h with head up to 10 metres.
Liquid temperature range:
from 0 °C to +35 °C for domestic use.
Pumped liquid: dirty water without fibres.
Minimum draught depth:

NOVA UP 300 M-AE	60 mm
NOVA UP 600 M-AE	70 mm

Max. immersion depth: 7 metres.
Installation: vertical, fixed or portable.
Protection class: IP 68.
Insulation class: F.

APPLICATIONS

The vertical delivery draining submersible pump is suitable for domestic automatically operated fixed applications, for draining basements and garages that are subject to flooding. This version is particularly suited for narrow well installation requiring automatic suction up to 2/3 mm. Thanks to its compact, easy to handle shape, it may also be used as a portable pump for emergencies such as lifting water from tanks or rivers, emptying swimming pools, fountains, excavations, and pedestrian subways. It is also ideal for gardening, and hobby applications in general. This pump can be used with liquids containing solid particles of up to 10 mm in size. The electronic level selector allows fixed installation, ensuring automatic operation, and enabling the selection of the level of the liquid for automatic start. With removable filter, it is capable of suction of up to a minimum of 2/3 mm (filter removed).

CONSTRUCTION FEATURES OF THE PUMP

Hydro resistant technopolymer pump body, cover, and suction grid.
Stainless steel motor, roto shaft, and bolts and screws.
Threefold seal with interposed rings with oil pre-chamber.

CONSTRUCTION FEATURES OF THE MOTOR

Submersible type continuous duty asynchronous motor.
Stator enclosed in airtight stainless steel casing, with an outer cover that protects the wiring and the capacitor. Rotor running on permanently lubricated ball bearings, oversized to ensure low noise and durability. Built-in thermal-amperometric protection and permanently connected capacitor.

MATERIALS

N.	PARTS*		MATERIALS
1	SUCTION STRAINER		TECHNOPOLYMER
2	BASE		TECHNOPOLYMER
3	IMPELLER		TECHNOPOLYMER
4	NUT		A2 DIN982-UNI7473 STAINLESS STEEL
5	WASHER		A2 STAINLESS STEEL
6	V. RING		NBR
7	MOTOR	CASE	ALUMINIUM
		ROTOR SHAFT	AISI 416 STAINLESS STEEL UNI EN 10088-1 X12CRS13
8	DIAPHRAGM		TECHNOPOLYMER
9	BODY		TECHNOPOLYMER
10 - 11	OR RING		NBR

* In contact with the liquid

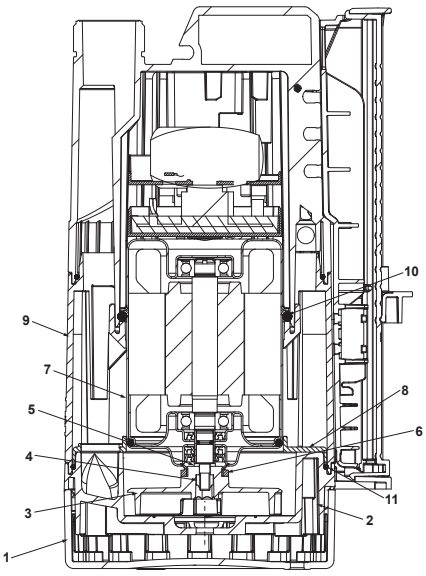

PERFORMANCE RANGE

The performance curves are based on kinematic viscosity values = 1 mm²/s and density equal to 1000 kg/m³. Curve tolerance according to ISO 9906.

GRAPHIC SELECTION TABLE

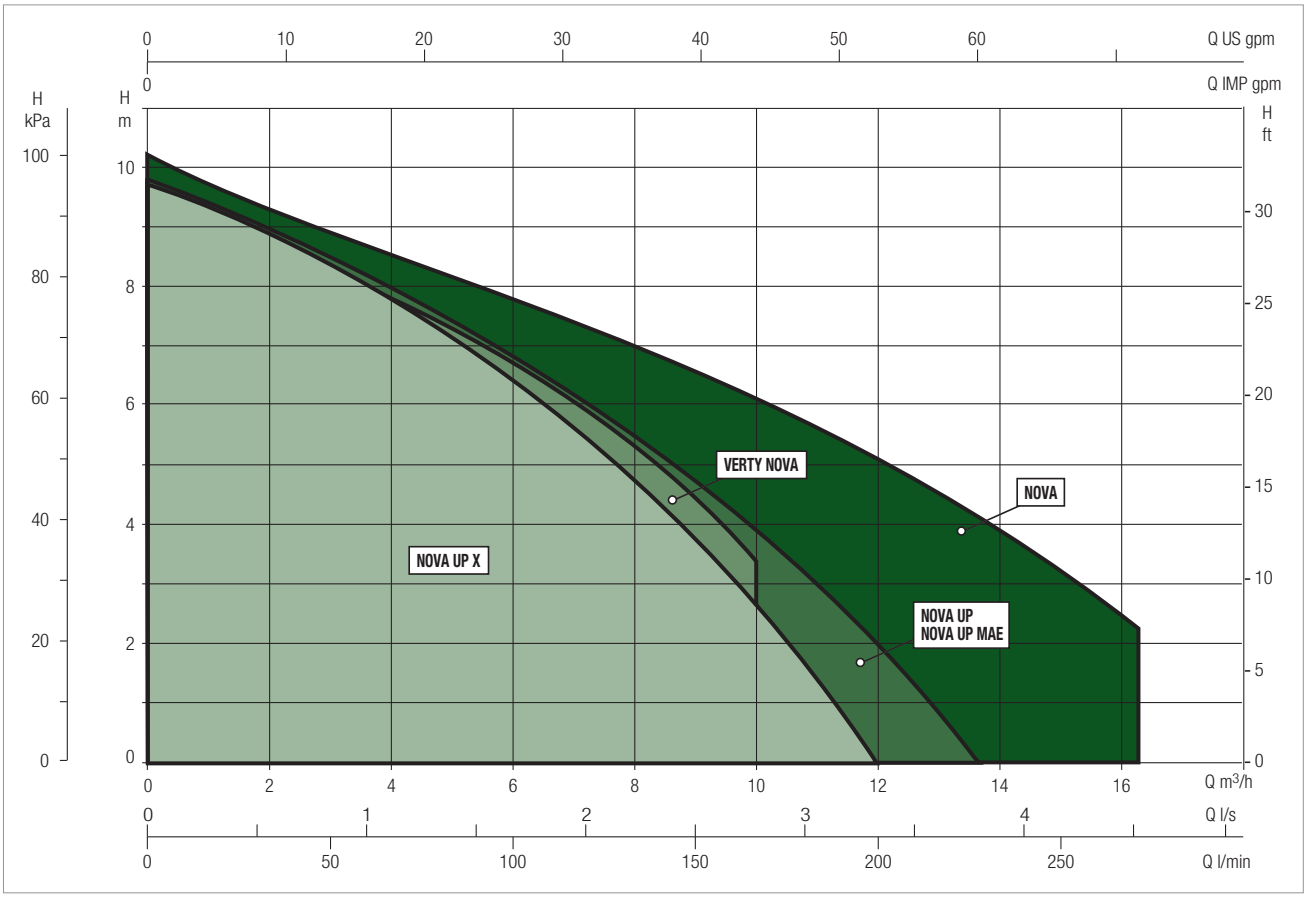

SELECTION TABLE - NOVA UP MAE

MODEL	Q= m³/h	0	1	2	3	4.5	5	6	7	7.5	9	10	12	13.5	15
	Q=l/min	0	16.6	33.3	50	75	83.3	100	116.6	125	150	166.6	200	225	250
NOVA UP 300 M-AE	H (m)	7.6	6.9	6.25	5.6	4.7	4.4	3.6	2.8	2.3	1				
NOVA UP 600 M-AE		9.8	9.4	9	8.5	7.7	7.4	6.8	6.2	5.9	4.7	3.9	2	0.3	

NOVA UP MAE - CLEAN WATER DRAINING SUBMERSIBLE PUMPS FOR DOMESTIC USE

Liquid temperature range: from 0 °C to +35 °C for domestic use

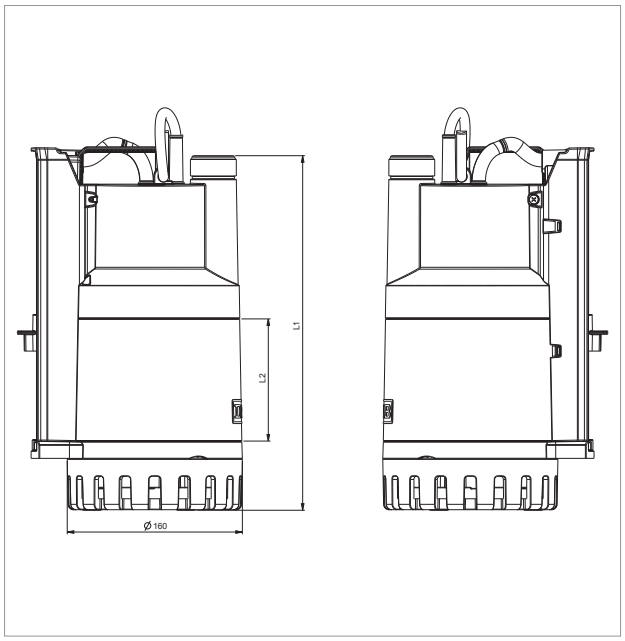

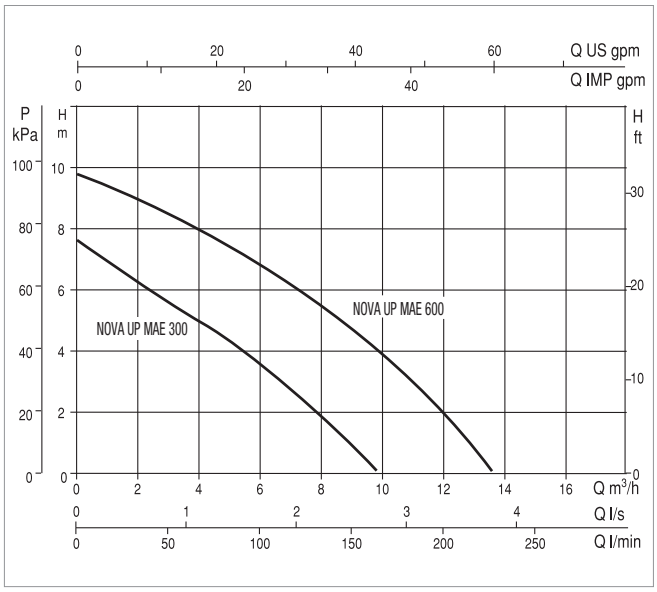

The performance curves are based on kinematic viscosity values = 1 mm^2/s and density equal to 1000 kg/m^3. Curve tolerance according to ISO 9906.

MODEL	ELECTRICAL DATA				
	POWER INPUT 50 Hz	P1 MAX kW	P2 NOMINAL		In A
			kW	HP	
NOVA UP 300 M-AE	1 x 220 - 240 V ~	0.38	0.21	0.28	1.5
NOVA UP 600 M-AE	1 x 220 - 240 V ~	0.77	0.52	0.69	3.5

MODEL	L1	L2	DNM GAS	PACKING DIMENSIONS			CABLE	VOLUME (m^3)	WEIGHT kg
				L/A	L/B	H			
NOVA UP 300 M-AE	296.2	75.9	1" ¾	265	225	317	10 mt.	0.018	5.8
NOVA UP 600 M-AE	324	111.6	1" ¾	265	225	352	10 mt.	0.021	7.3

VERTY NOVA

SUBMERSIBLE PUMPS WITH INTERNAL FLOAT

TECHNICAL DATA

Operating range:
from 1 to 10m³/h with head up to 9 metres.
Liquid temperature range:
from 0 °C to +35 °C for domestic use.
Pumped liquid: dirty water without fibres.
Pump priming limit:
10-15 mm in manual operation.
Max. immersion depth: 7 metres.

APPLICATIONS

The vertical delivery draining submersible pump is suitable for domestic automatically operated fixed applications, for draining basements and garages that are subject to flooding. Thanks to its compact and easy to handle shape, and the built-in float, it is suitable for particularly small draining wells (minimum 20x20 cm). It may also be used as a portable pump for emergencies such as lifting water from tanks or rivers, emptying swimming pools, fountains, excavations and underpasses. It is also ideal for gardening, and hobby applications in general. This pump can be used with liquids containing solid particles of up to 5 mm in size. The level switch with built-in float allows fixed installation, ensuring automatic operation. With easy access to the float for maintenance purposes, and automatic or manual mode selector. Minimum suction level up to 2/3 mm.

CONSTRUCTION FEATURES OF THE PUMP

Hydro resistant technopolymer pump body, cover, and suction grid.
Stainless steel motor, roto shaft, and bolts and screws.
Threefold seal with interposed rings with oil pre-chamber.

CONSTRUCTION FEATURES OF THE MOTOR

Submersible type continuous duty asynchronous motor.
Stator enclosed in airtight stainless steel casing, with an outer cover that protects the wiring and the capacitor. Rotor running on permanently lubricated ball bearings, oversized to ensure low noise and durability. Built-in thermal-amperometric protection and permanently connected capacitor.

MATERIALS

N.	PARTS*		MATERIALS
1	FILTER BASE		TECHNOPOLYMER
2	IMPELLER		TECHNOPOLYMER
3	NUT		A2 DIN982-UNI7473 STAINLESS STEEL
4	V. RING		NBR
5	WASHER		A2 STAINLESS STEEL
6	FLOAT		TECHNOPOLYMER
7	OR RING		NBR
8	DIAPHRAGM		TECHNOPOLYMER
9	MOTOR	CASE	ALUMINIUM
		ROTOR SHAFT	AISI 416 STAINLESS STEEL UNI EN 10088-1 X12CRS13
10	OR RING		NBR
11	BODY		TECHNOPOLYMER

* In contact with the liquid

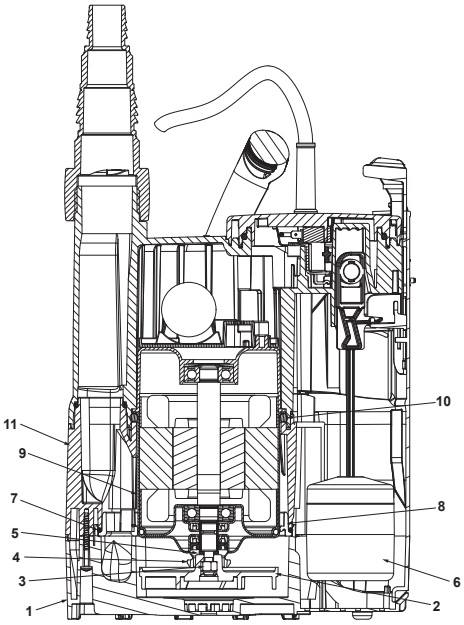

PERFORMANCE RANGE

The performance curves are based on kinematic viscosity values = 1 mm²/s and density equal to 1000 kg/m³. Curve tolerance according to ISO 9906.

GRAPHIC SELECTION TABLE

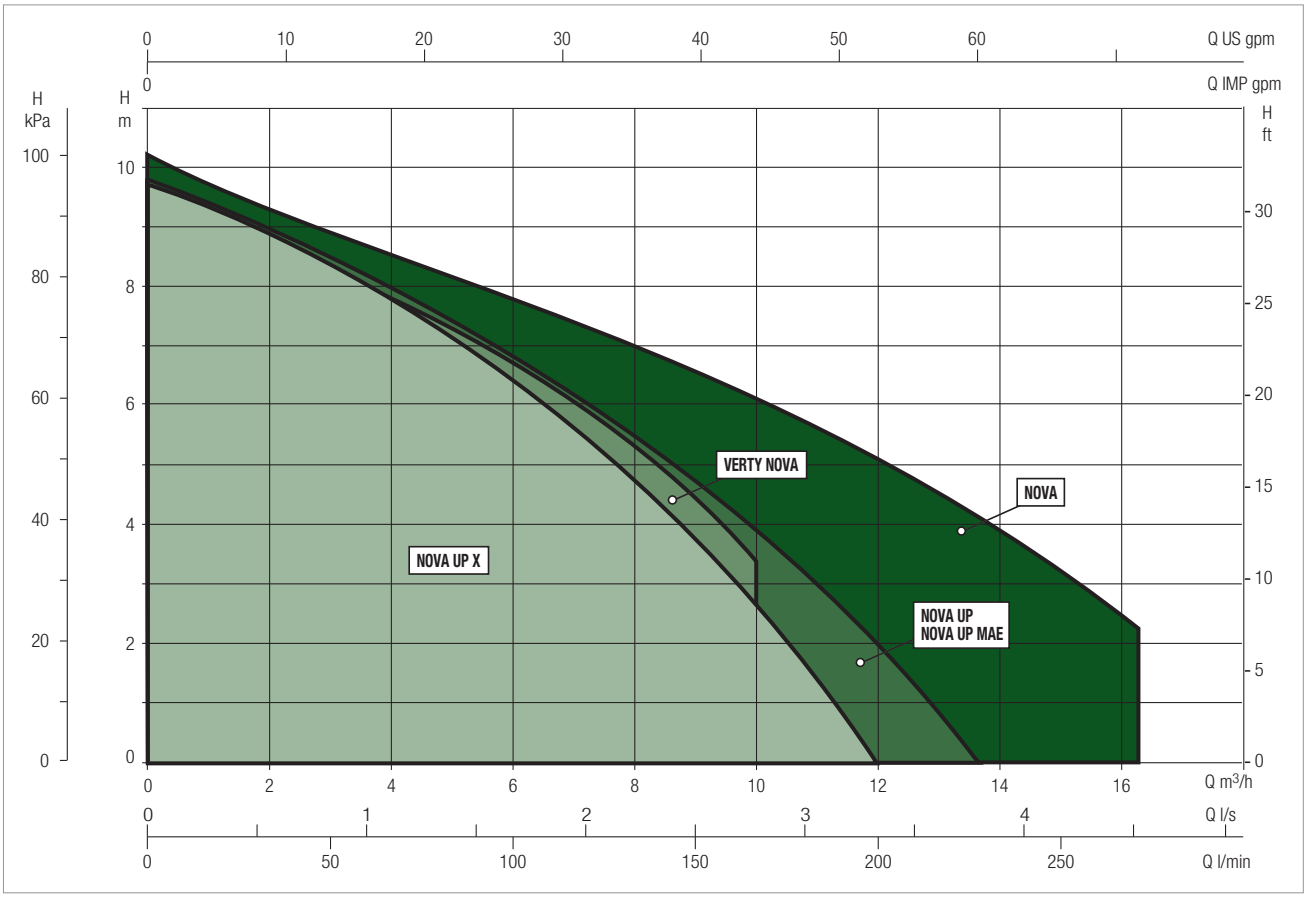

SELECTION TABLE - VERTY NOVA

MODEL	Q= m³/h	0	1	2	3	4.5	5	6	7	7.5	9	10	12	13.5	15
	Q=l/min	0	16.6	33.3	50	75	83.3	100	116.6	125	150	166.6	200	225	250
VERTY NOVA 200 M	H (m)	6.9	6.5	6	5.8	4.5	4	3	1.8						
VERTY NOVA 400 M		9	8.8	8.5	8.1	7.8	7	6.7	1.8	5.7	4.2	3.5			

DAB PUMPS reserves the right to make modifications without notice.

VERTY NOVA - CLEAN WATER DRAINING SUBMERSIBLE PUMPS FOR DOMESTIC USE WITH BUILT-IN FLOAT

Liquid temperature range: from 0 °C to +35 °C for domestic use

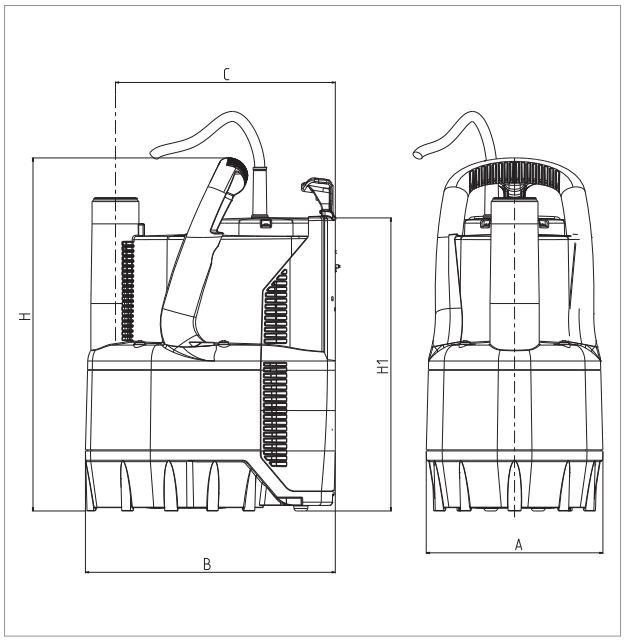

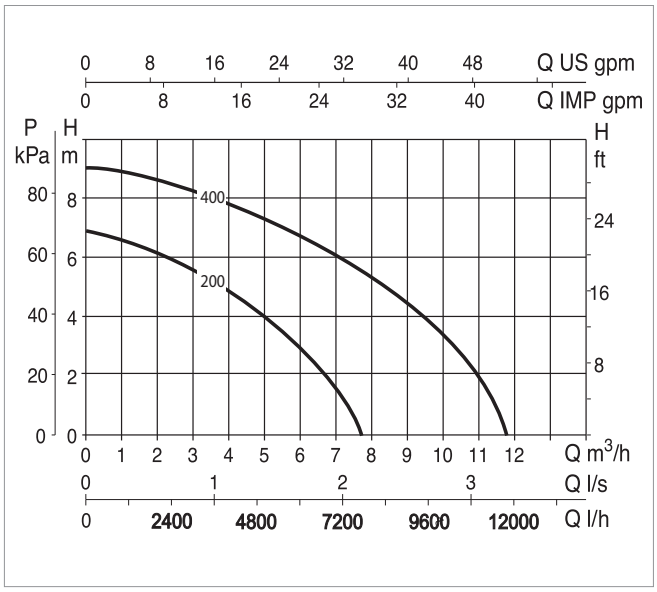

The performance curves are based on kinematic viscosity values = 1 mm²/s and density equal to 1000 kg/m³. Curve tolerance according to ISO 9906.

MODEL	ELECTRICAL DATA				
	POWER INPUT 50 Hz	P1 MAX kW	P2 NOMINAL		In A
			kW	HP	
VERTY NOVA 200 M	1 x 230 V ~	0.3	0.2	0.28	1.3
VERTY NOVA 400 M	1 x 230 V ~	0.6	0.4	0.55	2.6

MODEL	A	B	C	ØD	H	H1	DNM GAS	PACKING DIMENSIONS			CABLE	VOLUME (m³)	WEIGHT kg
								L/A	L/B	H			
VERTY NOVA 200 M	158	225	200	33	318	265	1" ¼	222	193	340	10 mt.	0.014	4.2
VERTY NOVA 400 M	158	225	200	33	354	301	1" ¼	222	193	340	10 mt.	0.014	5.1

DRENAG 1000-1200

SUBMERSIBLE PUMPS

TECHNICAL DATA

Operating range: from 3 to 28 m^3/h with head up to 17 metres.
Pumped liquid: rain water, ground water, sandy water from construction sites and clean, non aggressive, waste water.
Free passage of solids: 10 mm.
Liquid temperature range:
- from 0 °C to +35 °C for domestic use (EN 60335-2-41).
- from 0 °C to +50 °C for other uses.

Maximum ambient temperature for operation with motor above water: +40 °C
Maximum immersion depth: 7 metres.
Motor protection class: IP 68
Insulation class: F
Standard voltage: 220-240 V - 50Hz single-phase.
380-415 V - 50Hz three-phase.
Installation: fixed or portable, vertical or horizontal.

APPLICATIONS

Stainless steel centrifugal submersible pump with microcast ring impeller, suitable for draining clean waste water, sandy water, muddy water with solid particles of sizes up to 10 mm without fibres.Suitable for residential applications and for construction sites, also in case of unexpected flooding.

CONSTRUCTION FEATURES OF THE PUMP

Pump body, microcast ring impeller, motor flange, filter and disc, motor casing, cable compartment casing with handle and cover in AISI 304 stainless steel. Insulating rubber covered handle. AISI 316 stainless steel motor shaft. Double mechanical seal with interposed oil chamber (non-toxic oil) in carbon-alumina on the motor side, and silicon carbide-silicon carbide on the pump side.

CONSTRUCTION FEATURES OF THE MOTOR

Dry, asynchronous and waterproof motor, cooled by the pumped liquid. Rotor running on permanently lubricated sealed ball bearings, selected to ensure low noise and durability. Thermo-amperometric protection provided as standard. Permanently connected capacitor in the single-phase version.
The single-phase version can be supplied with float for automatic operation. Power cable: 10 metre H07RN-F, with UNEL 47166-68 plug for the single-phase version.
Number of poles: 2
Max starts/hour: 20

MATERIALS

N.	PARTS*		MATERIALS
1	PUMP BODY		AISI 304 STAINLESS STEEL X5CrNi 1810 - UNI 6900/71
4	IMPELLER		
7	MOTOR SHAFT		MICROCAST STAINLESS STEEL AISI 316 X5CrNiMo 1712 - UNI 6900/71
16	MECHANICAL SEAL	PUMP SIDE	SILICON CARBIDE/SILICON CARBIDE
		MOTOR SIDE	CARBON/ALUMINA
36	SEAL COVER		AISI 304 STAINLESS STEEL X5CrNi 1810 - UNI 6900/71
42	STRAINER		
54	MOTOR CASING		
69	PUMP LINER		
92	STRAINER COVER		
120	HANDLE		AISI 304 STAINLESS STEEL X5CrNi 1810 - UNI 6900/7 INSULATING RUBBER COATED

* In contact with the liquid

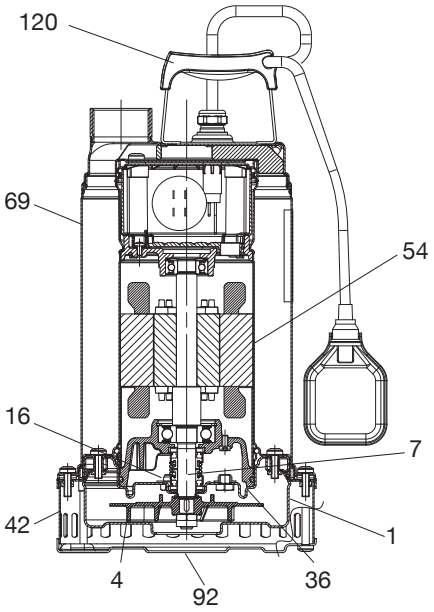

PERFORMANCE RANGE

The performance curves are based on kinematic viscosity values = 1 mm²/s and density equal to 1000 kg/m³. Curve tolerance according to ISO 9906.

GRAPHIC SELECTION TABLE

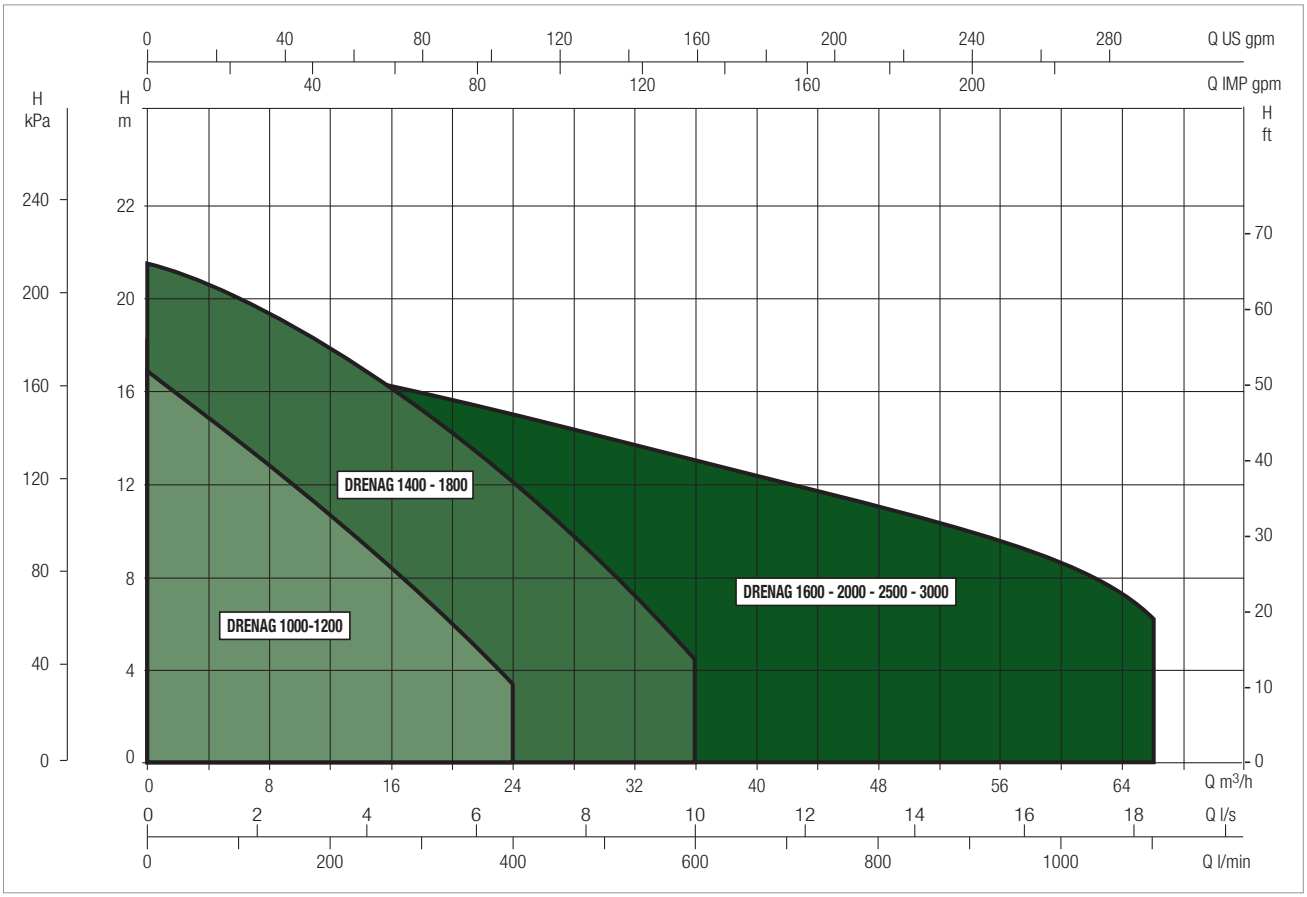

SELECTION TABLE - DRENAG 1000-1200

MODEL	Q= m³/h	0	3	6	9	12	15	18	24	30	36	42	48	54	60	66
	Q=l/min	0	50	100	150	200	250	300	400	500	600	700	800	900	1000	1100
DRENAG 1000 M-T	H (m)	15.3	13.7	12.1	10.5	8.7	6.8	4.7								
DRENAG 1200 M-T		17	15.4	13.8	12.4	10.7	9	7.3	3.3							

DRENAG 1000 - 1200 - SUBMERSIBLE PUMPS FOR DRAINING CONSTRUCTION SITE CLEAN AND SANDY WATER

Liquid temperature range: from 0 °C to +35 °C for domestic use - from 0 °C to +50 °C for the other uses.

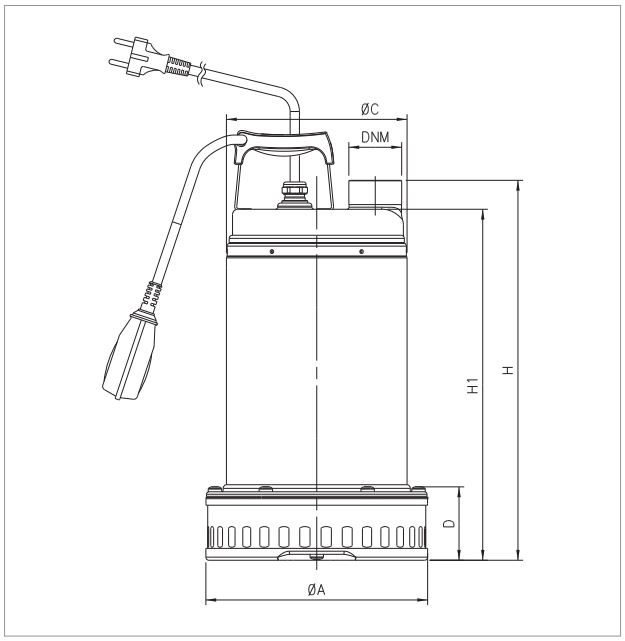

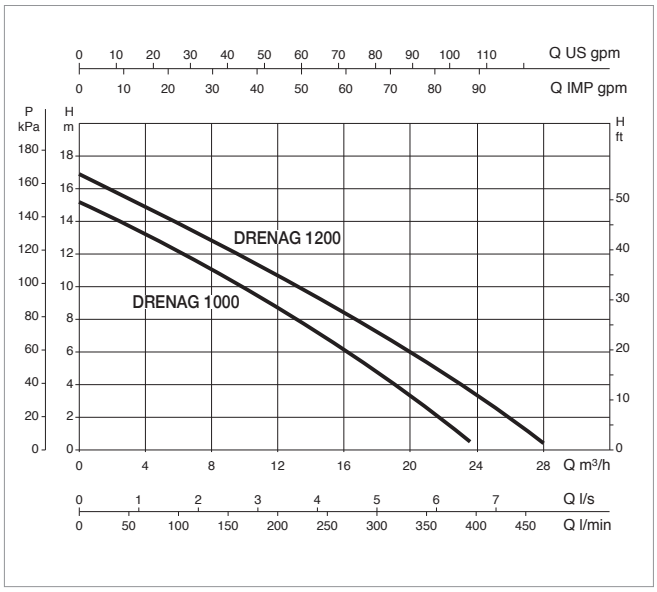

The performance curves are based on kinematic viscosity values = 1 mm^2/s and density equal to 1000 kg/m^3. Curve tolerance according to ISO 9906.

MODEL	ELECTRICAL DATA						
	POWER INPUT 50 Hz	P1 MAX W	P2 NOMINAL		In A	CAPACITOR	
			kW	HP		µF	Vc
DRENAG 1000 M	1 x 220 V -240 V ~	1.29	1	1.36	6	25	450
DRENAG 1000 T	3 x 400 V ~	1.18	1	1.36	2.43	-	-
DRENAG 1200 M	1 x 220 V -240 V ~	1.85	1.2	1.6	7.5	30	450
DRENAG 1200 T	3 x 400 V ~	1.65	1.2	1.6	3.24	-	-

MODEL	Ø A	Ø C	D	H	H1	Ø DNM	PACKING DIMENSIONS			VOLUME (m^3)	WEIGHT kg
							L/A	L/B	H		
DRENAG 1000	215	175	71	413	385	1 ½" F	240	600	250	0.034	17
DRENAG 1200	215	175	71	413	385	1 ½" F	240	600	250	0.034	18.5

PORTABLE INSTALLATION

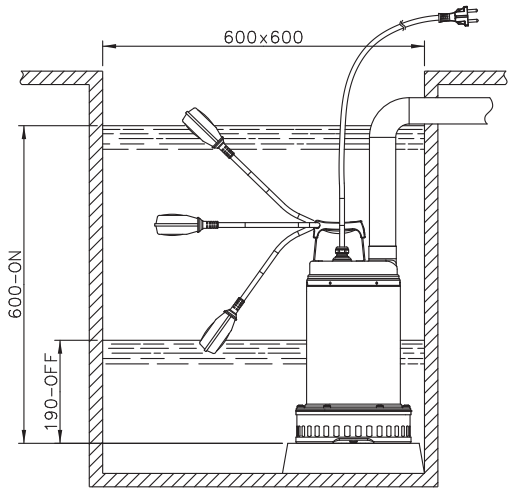

DRENAG 1400-1800

SUBMERSIBLE PUMPS

TECHNICAL DATA

Operating range: from 6 to 33 m^3/h with head up to 19,2 m for the single phase version, and 21,5 m for the three-phase version.
Pumped liquid: sandy water, muddy construction site water, clean waste water, rain water, ground water, fountain, river, or lake water, non aggressive.
Free passage of solids: 12 mm.
Liquid temperature range: from 0 °C to +55 °C
Max. immersion depth: 7 metres.
Protection class: IP68
Insulation class: F
Standard voltage: 220-240 V - 50Hz single-phase.
380-415 V - 50Hz three-phase.
Installation: fixed or portable, vertical position.

APPLICATIONS

Cast-iron centrifugal submersible pump with ring impeller, suitable for work site applications, designed for draining, lifting, or decanting sandy and muddy water, ground water, rain water, fountain water, clean waste water, lake and river water, containing solid particles with size up to 12 mm.

CONSTRUCTION FEATURES OF THE PUMP

Cast-iron pump body and motor casing. High resistance cast-iron ring impeller. Cast-iron suction covered with abrasion resistant rubber.
Stainless steel rotor shaft, handle, filter, filter cover and bolts and screws. Inspectable oil seal chamber.
Silicon carbide mechanical seal. GAS threaded 2" radial delivery port, to facilitate the installation of lifting devices (DSD 2).

CONSTRUCTION FEATURES OF THE MOTOR

Continuous duty, dry asynchronous submersible motor in watertight casing.
Rotor running on ball bearings, oversized and permanently lubricated.
Thermal protection in the winding, to be connected to the control panel.
In order to operate, the pumps must be equipped with control and protection systems, supplied separately

and not connected to the electric pumps.
The single-phase version must be equipped with an ED control panel, and built-in capacitor.
Supplied with 10 metre neoprene rubber power input cable 6x(4x1,5)+(2x0,5).
Number of poles: 2
Max starts/hour: 20

MATERIALS

N.	PARTS*	MATERIALS
1	PUMP BODY	CAST IRON 200 UNI ISO 185
4	IMPELLER	CAST IRON 200 UNI ISO 185
7	MOTOR SHAFT	AISI 416 STAINLESS STEEL X12CrS13 - UNI 6900/71
10	MOTOR CASING	CAST IRON 200 UNI ISO 185
16	MECHANICAL SEAL	SILICON CARBIDE
28	OR RING	VITON
29	OR RING	VITON
35	SUCTION COVER	CAST IRON 200 UNI ISO 185
42	SUCTION STRAINER	AISI 304 STAINLESS STEEL X5CrNi 1810- UNI 6900/71
77	PROTECTION COVER	CAST IRON 200 UNI ISO 185
92	STRAINER COVER	AISI 304 STAINLESS STEEL X5CrNi 1810- UNI 6900/71
120	HANDLE	AISI 304 STAINLESS STEEL X5CrNi 1810- UNI 6900/71

* In contact with the liquid

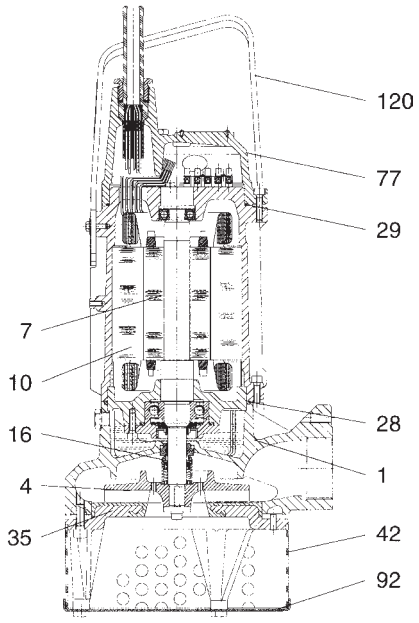

PERFORMANCE RANGE

The performance curves are based on kinematic viscosity values = 1 mm²/s and density equal to 1000 kg/m³. Curve tolerance according to ISO 9906.

GRAPHIC SELECTION TABLE

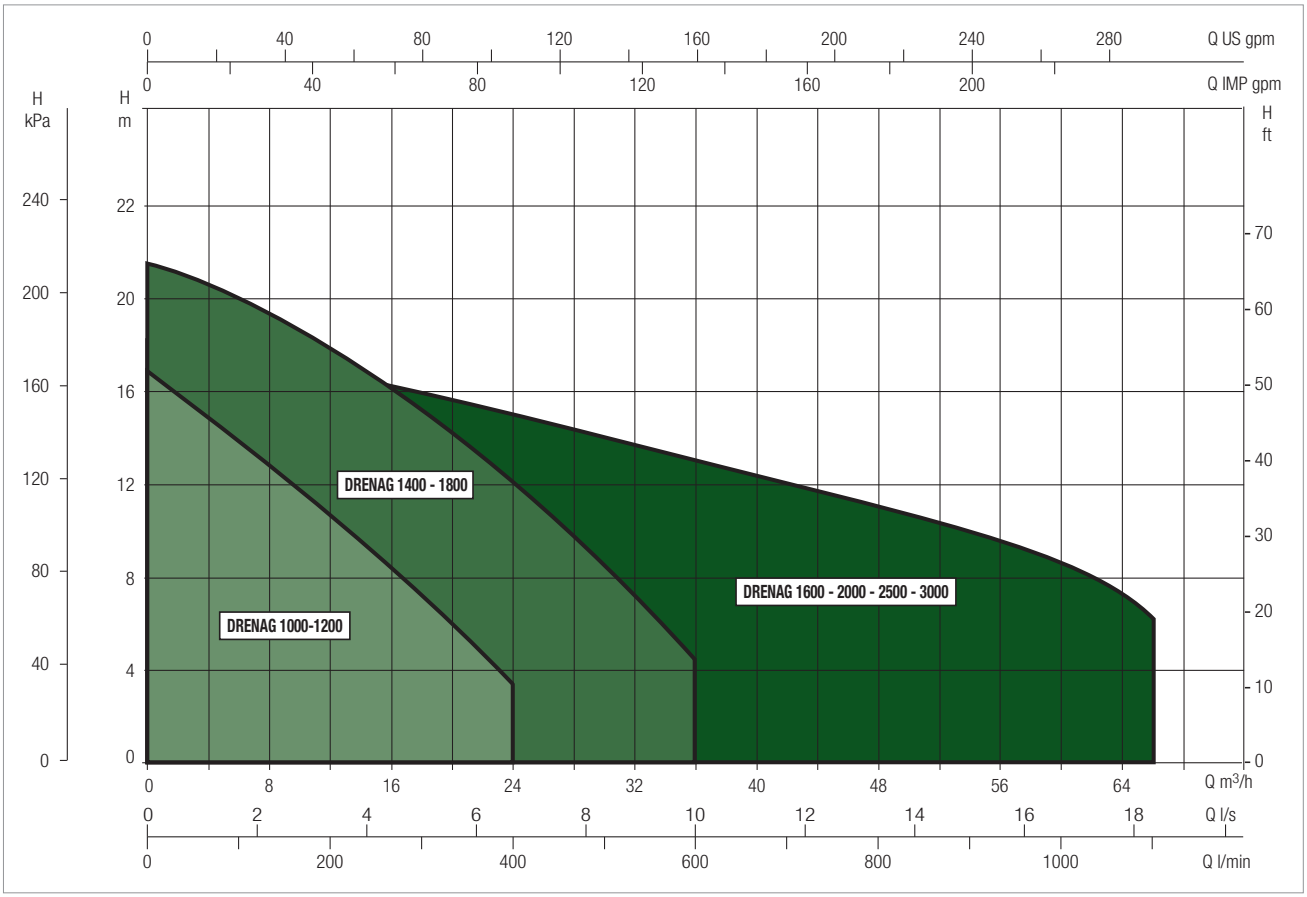

SELECTION TABLE - DRENAG 1400-1800

MODEL	Q= m³/h	0	3	6	9	12	15	18	24	30	36	42	48	54	60	66
	Q=l/min	0	50	100	150	200	250	300	400	500	600	700	800	900	1000	1100
DRENAG 1400 M	H (m)	19.2	17	15.9	14.6	13.5	12.1	9	5.5							
DRENAG 1800 T		21.5	20	19	18	16.5	15.2	12	8.5	4.5						

DAB PUMPS reserves the right to make modifications without notice.

DRENAG 1400 - 1800 - SUBMERSIBLE PUMPS FOR DRAINING CONSTRUCTION SITE CLEAN AND SANDY WATER

Liquid temperature range: from 0 °C to +55 °C

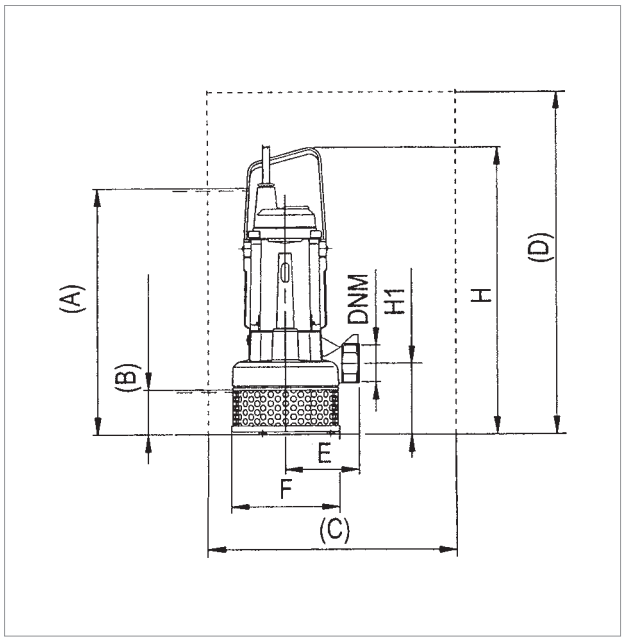

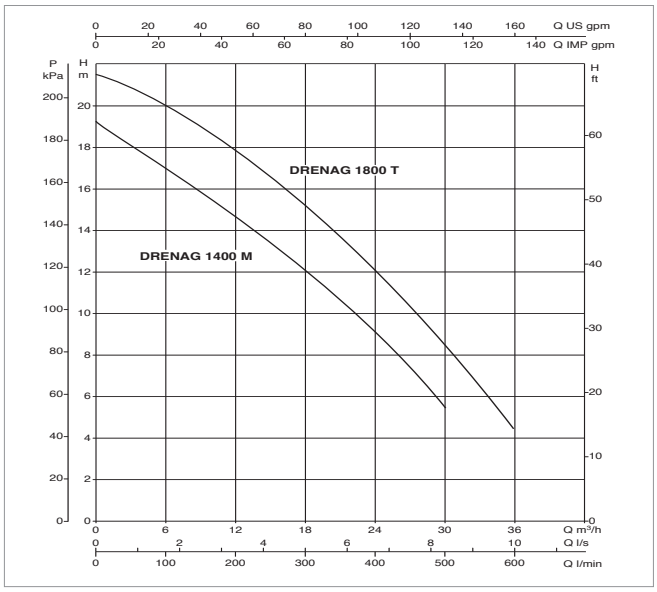

The performance curves are based on kinematic viscosity values = 1 mm^2/s and density equal to 1000 kg/m^3. Curve tolerance according to ISO 9906.

MODEL	ELECTRICAL DATA						
	POWER INPUT 50 Hz	P1 MAX kW	P2 NOMINAL		In A	CAPACITOR	
			kW	HP		µF	Vc
DRENAG 1400 M	1 x 220 V -240 V ~	2	1.1	1.5	9.2	30	450
DRENAG 1800 T	3 x 400 V ~	2.3	1.5	2	4.4	-	-

MODEL	A	B	C	D	E	F Ø	DNM	H	H1	PACKING DIMENSIONS			VOLUME (m^3)	WEIGHT kg
										L/A	L/B	H		
DRENAG 1400	500	90	500 X 500 min	600 min	150	219	2" G	584	144	680	330	446	0.1	43.3
DRENAG 1800	500	90	500 X 500 min	600 min	150	219	2" G	584	144	680	330	446	0.1	44.2

DRENAG 1600-2000-2500-3000

SUBMERSIBLE PUMPS

TECHNICAL DATA

Operating range:
from 3 to 66 m^3/h with head up to 17 metres.
Pumped liquid:
clean draining water in general, for domestic or civil use, compatible with the construction materials.
Free passage of solids: 5 mm.
Free passage: 5 mm.
Liquid temperature range: from 0 °C to 40 °C.
Maximum immersion depth: 7 metres.
Motor protection class: IP 68.
Insulation class: F.
Standard voltage: 220-240 V - 50Hz single-phase.
380-415 V - 50Hz three-phase.
Power cable: H07RN-F, 10 metres.
Installation: free, vertical position.
Continuous duty with completely submerged pump.

APPLICATIONS

Submersible electric pump suitable for construction site, industrial, or residential applications, for draining sandy, ground, meteoric, and clean waste water with solid particles with size up to 5 mm.

CONSTRUCTION FEATURES OF THE PUMP

Anodized aluminium upper cover and pump body; ENGJS 200 cast iron hydraulic body and impeller
Double mechanical seal, carbon/alumina in oil chamber on the motor side, silicon/silicon on the pump side.
GAS threaded 2" 1/2 radial delivery port.

CONSTRUCTION FEATURES OF THE MOTOR

Dry, asynchronous and waterproof motor, cooled by the surrounding liquid.
Continuous S1 duty with completely submerged pump.
Rotor mounted on permanently lubricated ball bearings, oversized to ensure long-term reliability and extended lifetime.
Capacitor housed in the wiring compartment under the upper cover for the single-phase version.
Number of poles: 2
Max starts/hour: 20

MATERIALS

N.	PARTS*	MATERIALS
1	POWER INPUT CABLE	H07RN-F
2	UPPER COVER	ANODIZED ALUMINIUM
3	MOTOR BODY	ANODIZED ALUMINIUM
4	MOTOR SHAFT	AISI 420
5	OR	NBR
6	BEARING FLANGE	EN GJL 200 CAST IRON
7	MECHANICAL SEAL	MOTOR: CARBON/ALUMINA
		PUMP: SILICON - SILICON
8	IMPELLER	EN GJL 200 CAST IRON
9	HYDRAULIC BODY	EN GJL 200 CAST IRON
10	GRID	AISI 304 STAINLESS STEEL

* In contact with the liquid

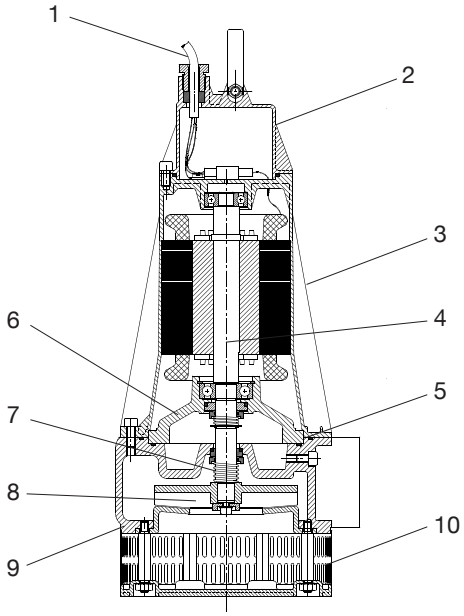

DRENAG RANGE

SUBMERSIBLE PUMPS

PERFORMANCE RANGE

The performance curves are based on kinematic viscosity values = 1 mm²/s and density equal to 1000 kg/m³. Curve tolerance according to ISO 9906.

GRAPHIC SELECTION TABLE

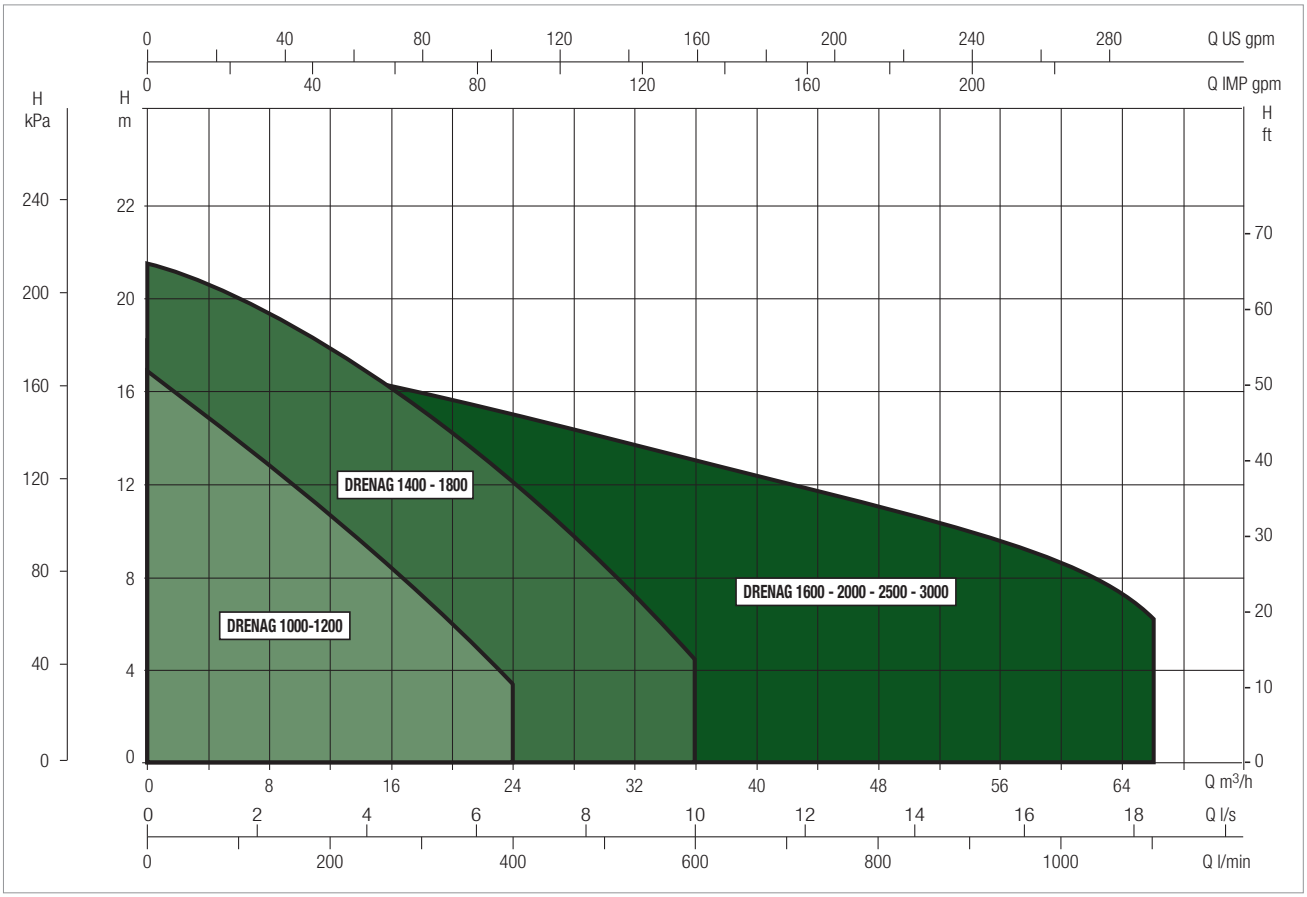

SELECTION TABLE - DRENAG 1600-2000-2500-3000

MODEL	Q= m³/h	0	3	6	9	12	15	18	24	30	36	42	48	54	60	66
	Q=l/min	0	50	100	150	200	250	300	400	500	600	700	800	900	1000	1100
DRENAG 1600 M-T	H (m)	8	7.6	7.2	7	6.7	6.4	6	5.3	4.7	3.9	2.8				
DRENAG 2000 T		10.8	10.5	10.3	10	9.7	9.4	9.1	8.4	7.4	6.4	5.3	4.2	2.9		
DRENAG 2500 T		15	14.4	13.9	13.5	13.1	12.8	12.4	11.7	10.9	9.9	8.9	7.9	6.7	5.3	3.9
DRENAG 3000 T		18.2	17.9	17.6	17.2	16.8	16.4	15.9	14.9	14	12.9	12	10.9	9.9	8.2	6.2

DAB PUMPS reserves the right to make modifications without notice.

DRENAG 1600 - 2000 - 2500 - 3000 - WORK SITE CLEAN AND SANDY WATER DRAINING SUBMERSIBLE PUMPS

Liquid temperature range: from 0 °C to +40 °C

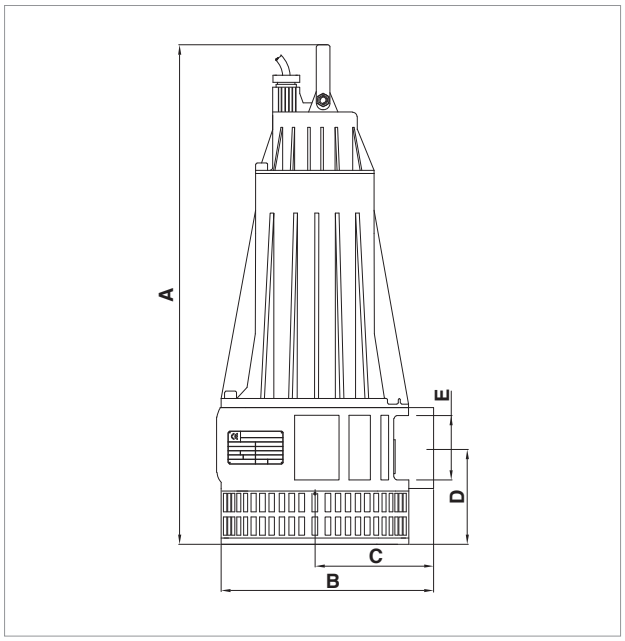

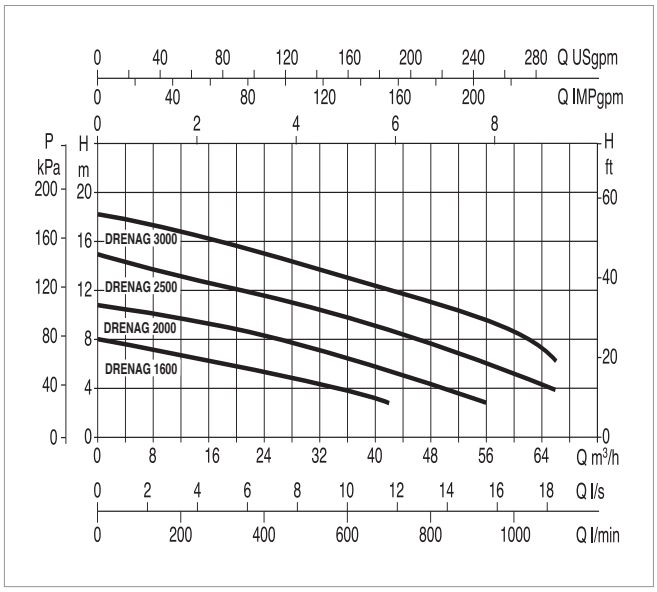

The performance curves are based on kinematic viscosity values = 1 mm^2/s and density equal to 1000 kg/m^3. Curve tolerance according to ISO 9906.

MODEL	ELECTRICAL DATA						
	POWER INPUT 50 Hz	P1 MAX kW	P2 NOMINAL		In A	CAPACITOR	
			kW	HP		µF	Vc
DRENAG 1600 M-A	1 x 230 V ~	1.6	1.1	1.5	7.4	30	450
DRENAG 1600 T-NA	3 x 400 V ~	1.6	1.1	1.5	3	-	-
DRENAG 2000 T-NA	3 x 400 V ~	2	1.4	1.9	4.1	-	-
DRENAG 2500 T-NA	3 x 400 V ~	3.1	1.8	2.4	5.3	-	-
DRENAG 3000 T-NA	3 x 400 V ~	3.5	2.2	2.9	6.2	-	-

MODEL	A	B	C	D	E - DNM GAS	FREE PASSAGE mm	PACKING DIMENSIONS			VOLUME (m^3)	WEIGHT kg
							L/A	L/B	H		
DRENAG 1600 M-A	550	215	112	110	2" ½	5	400	400	750	0.12	23.5
DRENAG 1600 T-NA	550	215	112	110	2" ½	5	400	400	750	0.12	23.5
DRENAG 2000 T-NA	550	215	112	110	2" ½	5	400	400	750	0.12	23.5
DRENAG 2500 T-NA	550	215	112	110	2" ½	5	400	400	750	0.12	24
DRENAG 3000 T-NA	550	215	112	110	2" ½	5	400	400	750	0.12	26

DAB PUMPS reserves the right to make modifications without notice.

DIG 1100-1500-1800-2200

SUBMERSIBLE PUMPS

TECHNICAL DATA

Operating range:
from 6 to 54 m^3/h with head up to 20 metres.
Pumped liquid: rain water, ground water, sandy water from construction site, water containing abrasive particles in general.
Free passage of solids: 6 mm.
Liquid temperature range: from 0 °C to 35 °C.
Maximum immersion depth: 20 metres (with cable of appropriate length).
Motor protection class: IP 68.
Insulation class: F.
Standard voltage: 220-240 V - 50Hz single-phase.
380-415 V - 50Hz three-phase.
Installation: fixed or portable, vertical position.
Continuous service with completely or partially submerged pump.
Power cable:
10 metres H07RN-F. Special patented steel core reinforced tear-resistant electric cable also available on request.

APPLICATIONS

Portable pumps, ideal for draining abrasive liquids in the field:
- Building, tunnel, or infrastructure construction sites
- Civil, for pedestrian subways and car parks
- Industrial, for process waters
- Open mines and caves
- Municipal, for emergency sandy water flooding

CONSTRUCTION FEATURES OF THE PUMP

Pump body made of EN GJL 200 cast iron, internally lined with high abrasion and wear resistance Nitrile (NR) rubber.
Double silicon carbide/silicon carbide mechanical seal on the pump side and carbon/alumina seal on the motor side, in oil chamber plus lip seal.
AISI 304 stainless steel suction grid
Delivery ND: 2”½
Open CRA2 650 HB chrome cast iron impeller

CONSTRUCTION FEATURES OF THE MOTOR

Dry, asynchronous and waterproof type motor, cooled by the pumped liquid. Rotor mounted on permanently lubricated ball bearings, oversized to ensure long-term reliability and extended lifetime. Standard built-in thermo-amperometric protection. Capacitor permanently fitted on single phase versions. Continuous S1 service with completely or partially submerged pump.
Number of poles: 2
Max starts/hour: 15

MATERIALS

N.	PARTS*	MATERIALS
1	POWER INPUT CABLE	H07RN-F
2	HANDLE	CHROME STEEL
3	UPPER COVER	EN GJL 200 CAST IRON
4	OR	NBR
5	EXTERNAL COOLING LINER	AISI 304 STAINLESS STEEL
6	ROTOR SHAFT	AISI 420
7	MOTOR BODY	AISI 304
8	BEARING FLANGE	EN GJL 200 CAST IRON
9	MECHANICAL SEAL	MOTOR: CARBON/ALUMINA PUMP: SILICON CARBIDE/SILICON CARBIDE
10	IMPELLER	AISI ASTM 532-80
11	HYDRAULIC BODY	70SHORE ABRASION RESISTANCE RUBBER
12	GRID	AISI 304 STAINLESS STEEL

* In contact with the liquid

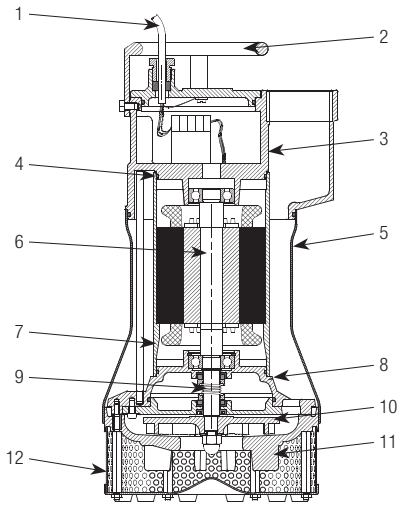

DAB PUMPS reserves the right to make modifications without notice.

PERFORMANCE RANGE

The performance curves are based on kinematic viscosity values = 1 mm²/s and density equal to 1000 kg/m³. Curve tolerance according to ISO 9906.

GRAPHIC SELECTION TABLE

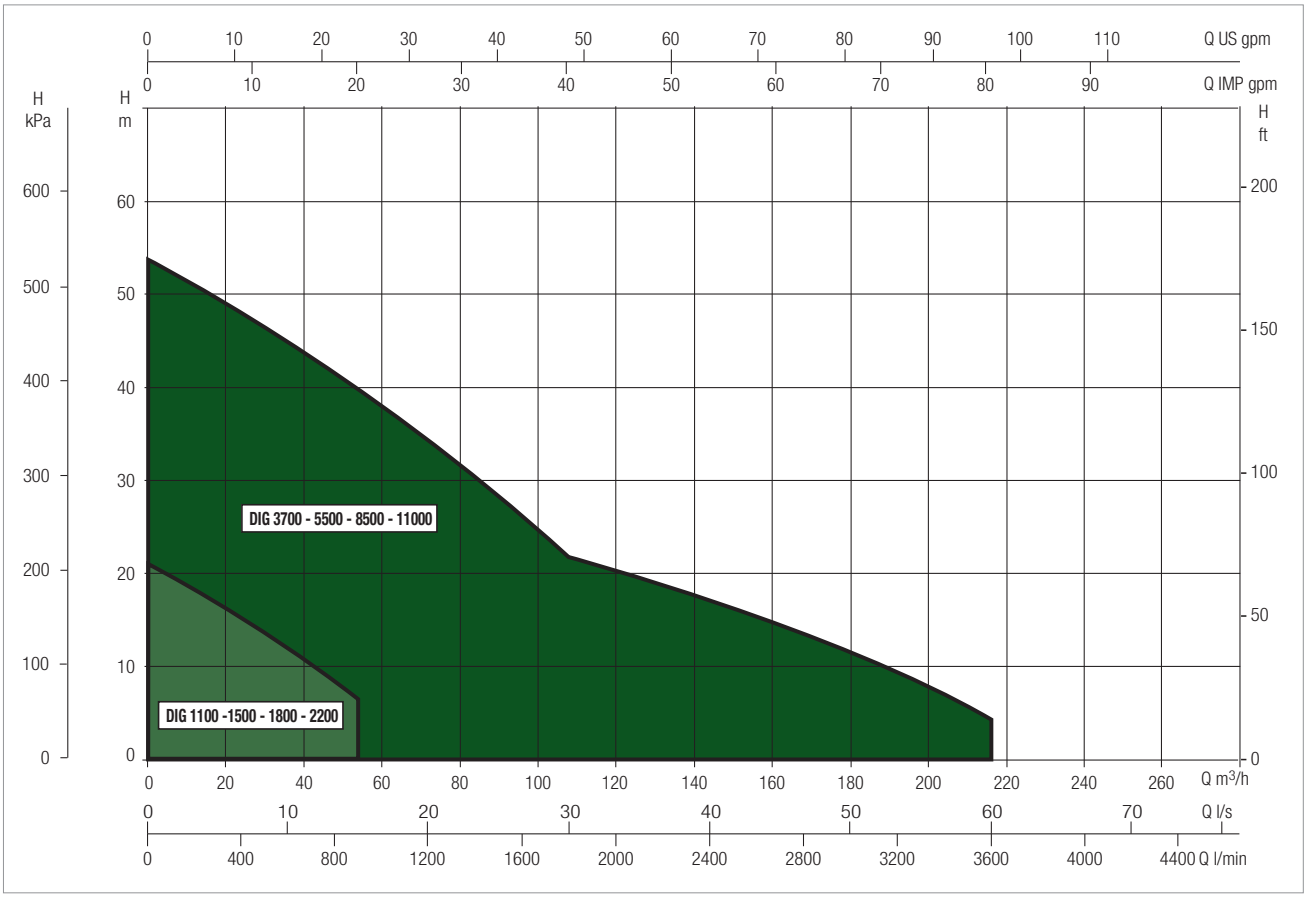

SELECTION TABLE - DIG 1100 -1500 - 1800 - 2200

MODEL	Q= m³/h	0	6	12	18	24	30	36	42	48	54	60	72	84	96	108	120	132
	Q=l/min	0	100	200	300	400	500	600	700	800	900	1000	1200	1400	1600	1800	2000	2200
DIG 1100 M-T	H (m)	11.3	10.6	9.6	8.5	7.4	6.5	5.3	3.8	3.0								
DIG 1500 T		13		11.0	10.0	9.0	8.0	6.8	5.3	4.0								
DIG 1800 T		17.6		15.0	13.8	12.5	11.0	9.4	8.1	6.3	4.9							
DIG 2200 T		20.1		16.8	15.2	14.1	12.4	10.6	9.1	7.4	5.9							

DAB PUMPS reserves the right to make modifications without notice.

DIG 1100 -1500 - 1800 - 2200 - SUBMERSIBLE PUMPS FOR DRAINING CLEAR WATER CONTAINING ABRASIVE SUBSTANCES

Liquid temperature range: from 0 °C to +35 °C

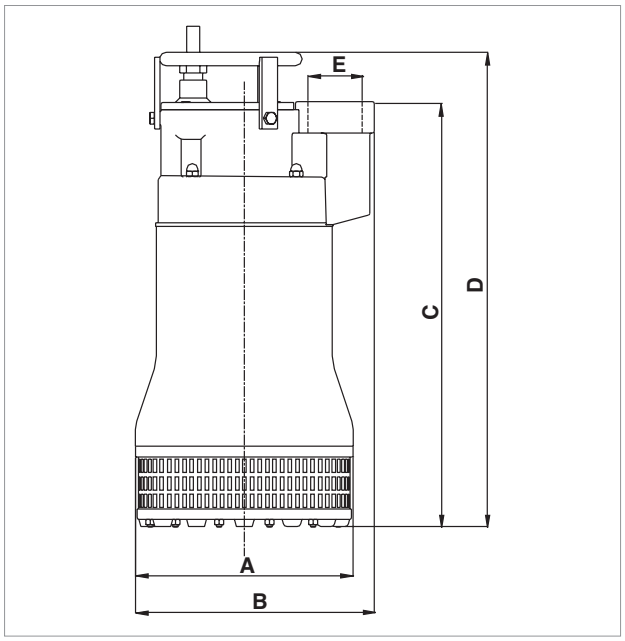

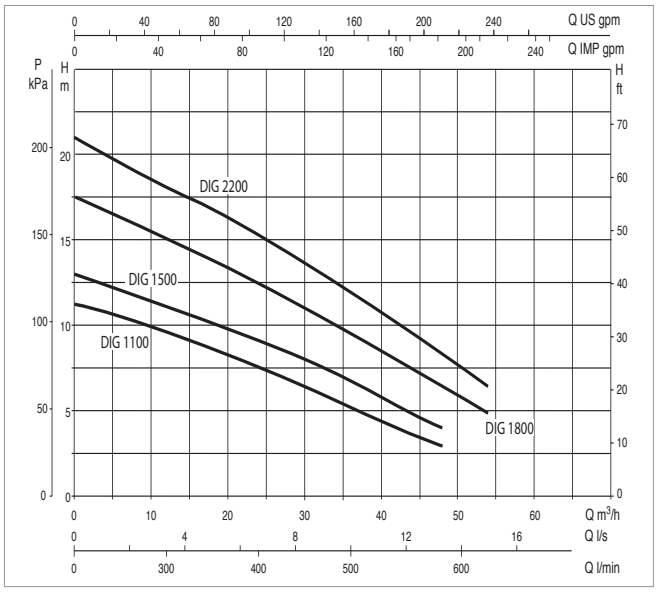

The performance curves are based on kinematic viscosity values = 1 mm^2/s and density equal to 1000 kg/m^3. Curve tolerance according to ISO 9906.

MODEL	ELECTRICAL DATA						
	POWER INPUT 50 Hz	P1 MAX kW	P2 NOMINAL		In A	CAPACITOR	
			kW	HP		µF	Vc
DIG 1100 MA	1 x 230 V ~	1.7	1.1	1.5	7.8	25	450
DIG 1100 M-NA	1 x 230 V ~	1.7	1.1	1.5	7.8	25	450
DIG 1100 T-NA	1 x 230 V ~	1.7	1.1	1.5	3	-	-
DIG 1500 T-NA	1 x 230 V ~	2.4	1.5	2	4.3	-	-
DIG 1800 T-NA	1 x 230 V ~	3.2	1.8	2.4	5.3	-	-
DIG 2200 T-NA	1 x 230 V ~	4.0	2.2	3	6.4	-	-

MODEL	A	B	C	D	E DNM	FREE PASSAGE mm	PACKING DIMENSIONS			VOLUME (m^3)	WEIGHT kg
							L/A	L/B	H		
DIG 1100 MA	250	270	480	530	2 1/2" - F	6	400	400	750	0.12	34
DIG 1100 M-NA	250	270	480	530	2 1/2" - F	6	400	400	750	0.12	34
DIG 1100 T-NA	250	270	480	530	2 1/2" - F	6	400	400	750	0.12	34
DIG 1500 T-NA	250	270	480	530	2 1/2" - F	6	400	400	750	0.12	35
DIG 1800 T-NA	250	270	480	530	2 1/2" - F	6	400	400	750	0.12	36
DIG 2200 T-NA	250	270	480	530	2 1/2" - F	6	400	400	750	0.12	37

DIG 3700 - 5500 - 8500 - 11000

SUBMERSIBLE PUMPS

TECHNICAL DATA

Operating range: from 12 to 240 m^3/h with head up to 57.5 metres.
Pumped liquid: rain water, ground water, sandy water from construction site, water containing abrasive particles in general.
Free passage of solids: 6 mm.
Liquid temperature range: from 0 °C to 35 °C.
Maximum immersion depth: 20 metres (with cable of appropriate length).
Motor protection class: IP 68
Insulation class: F
Standard voltage: 220-240 V - 50Hz single-phase.
380-415 V - 50Hz three-phase.
Installation: fixed or portable, vertical position.
Continuous service with completely or partially submerged pump.
Power cable: 10 metres H07RN-F. Special patented steel core reinforced tear-resistant electric cable also available on request.

APPLICATIONS

Portable pumps, ideal for draining abrasive liquids in the field:
- Building, tunnel, or infrastructure construction sites
- Civil, for pedestrian subways and car parks
- Industrial, for process waters
- Open mines and caves
- Municipal, for emergency sandy water flooding

CONSTRUCTION FEATURES OF THE PUMP

Pump body made of EN GJL 200 cast iron, internally lined with high abrasion and wear resistance Nitrile (NR) rubber.
Double silicon carbide/silicon carbide mechanical seal on the pump side and carbon/alumina seal on the motor side, in oil chamber.
AISI 304 stainless steel suction grid
Delivery ND: 3" for the APT version, 4" for the MPT version
Open CRA2 650 HB chrome cast iron impeller

CONSTRUCTION FEATURES OF THE MOTOR

Dry, asynchronous and waterproof type motor, cooled by the pumped liquid. Rotor mounted on permanently lubricated ball bearings, oversized to ensure long-term reliability and extended lifetime. Built-in thermo-amperometric protection. Continuous S1 service with completely or partially submerged pump.
Number of poles: 2
Max starts/hour: 15

MATERIALS

N.	PARTS*	MATERIALS
1	POWER INPUT CABLE	H07RN-F
2	HANDLE	
3	UPPER COVER	EN GJL 200 CAST IRON
4	OR	NBR
5	EXTERNAL COOLING LINER	AISI 304 STAINLESS STEEL
6	ROTOR SHAFT	AISI 420
7	MOTOR BODY	
8	BEARING FLANGE	EN GJL 200 CAST IRON
9	MECHANICAL SEAL	MOTOR: SILICON CARBIDE/SILICON CARBIDE PUMP: SILICON CARBIDE/SILICON CARBIDE
10	IMPELLER	CRA2 650HB CHROME CAST IRON
11	HYDRAULIC BODY	70SHORE ABRASION RESISTANCE RUBBER
12	GRID	AISI 304 STAINLESS STEEL

* In contact with the liquid

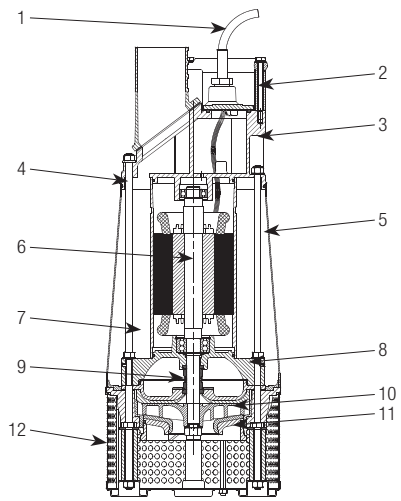

PERFORMANCE RANGE

The performance curves are based on kinematic viscosity values = 1 mm²/s and density equal to 1000 kg/m³. Curve tolerance according to ISO 9906.

GRAPHIC SELECTION TABLE

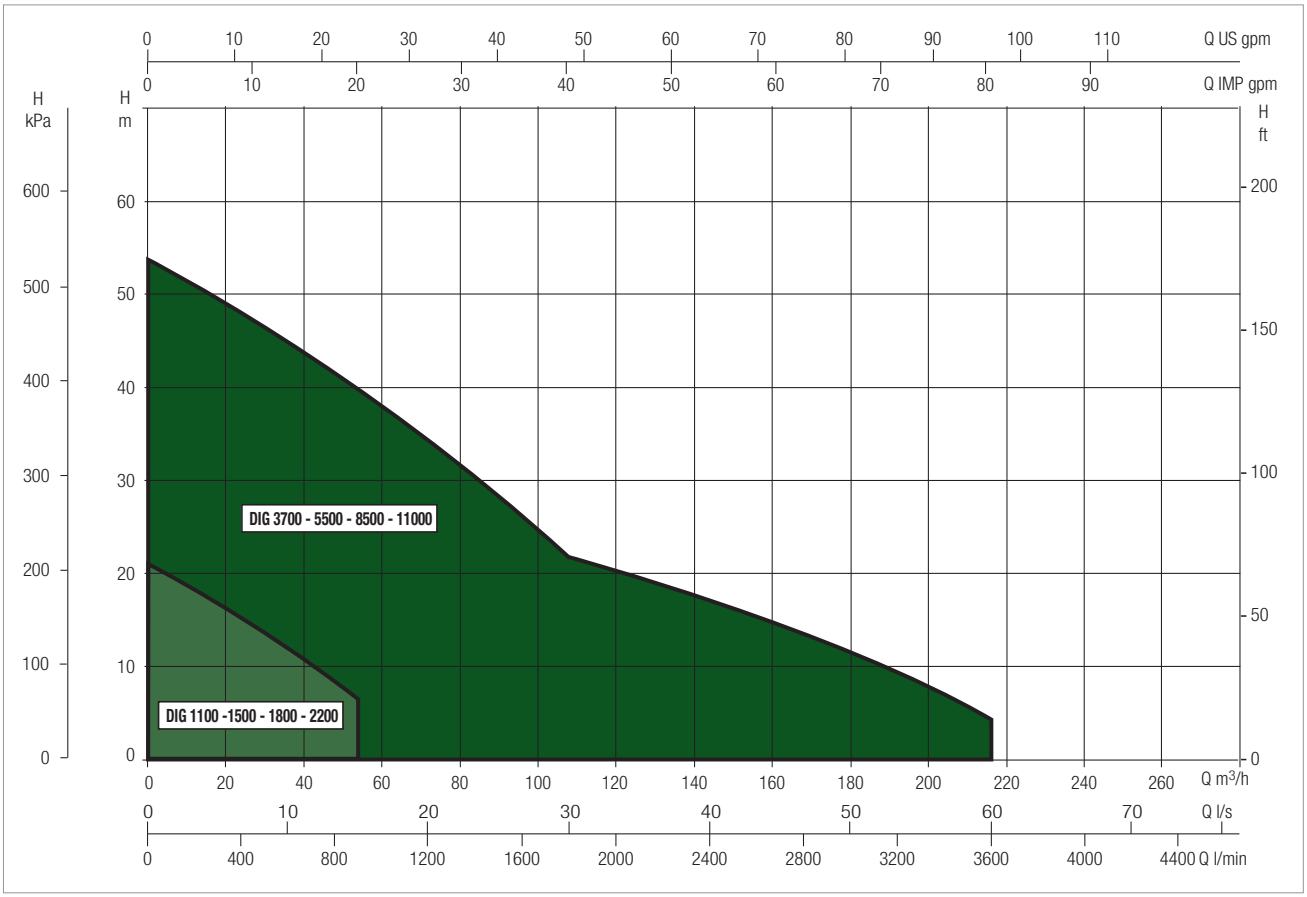

SELECTION TABLE - DIG 3700 5500 - 8500 - 11000

MODEL	Q= m³/h	0	6	12	18	24	30	36	42	48	54	60	72	84	96	108	120	132
	Q=l/min	0	100	200	300	400	500	600	700	800	900	1000	1200	1400	1600	1800	2000	2200
DIG 3700 AP T	H (m)	32.5		29.0	27.3	25.0	23.2	20.1	17.5	14.8	12.3							
DIG 3700 MP T		12.5		12.1	11.8	11.6	11.3	11.0	10.6	10.1	9.9	9.4	8.5	7.4	6.0	4.9	3.3	
DIG 5500 AP T		41.6		37.7	35.3	32.4	30.0	27.0	23.8	21.2	18.0	14.7	7.8	2.5				
DIG 5500 MP T		20.0		19.5	19.2	18.9	18.6	18.2	17.9	17.3	16.7	15.8	14.4	12.6	10.5	9.1	7.2	5.0
DIG 8500 AP T		45.0		42.8	40.3	38.1	35.8	34.3	32.2	30.1	28.3	26.2	22.4	18.3	14.6	11.6	8.6	5.4
DIG 8500 MP T		23.0		22.5	22.0	21.5	21.2	20.8	20.3	19.7	19.2	18.5	17.5	16.2	15.1	13.5	11.7	10.3
DIG 11000 AP T		58		54.0	52.0	50.5	49.0	47.5	46.0	44.0	42.0	40.0	36.0	31.0	26.0	21.0	16.0	11.0
DIG 11000 MP T		32		31.0	31.0	30.1	29.4	29.1	28.0	28.0	27.4	26.5	25.6	24.6	23.3	22.1	20.7	19.1

DIG 3700 -5500 - 8500 - 11000 - SUBMERSIBLE PUMPS FOR DRAINING CLEAR WATER CONTAINING ABRASIVE SUBSTANCES

Liquid temperature range: from 0 °C to +35 °C

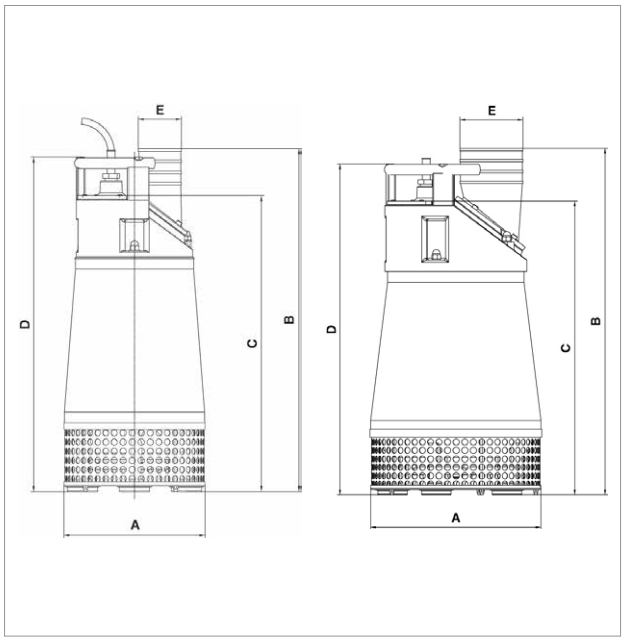

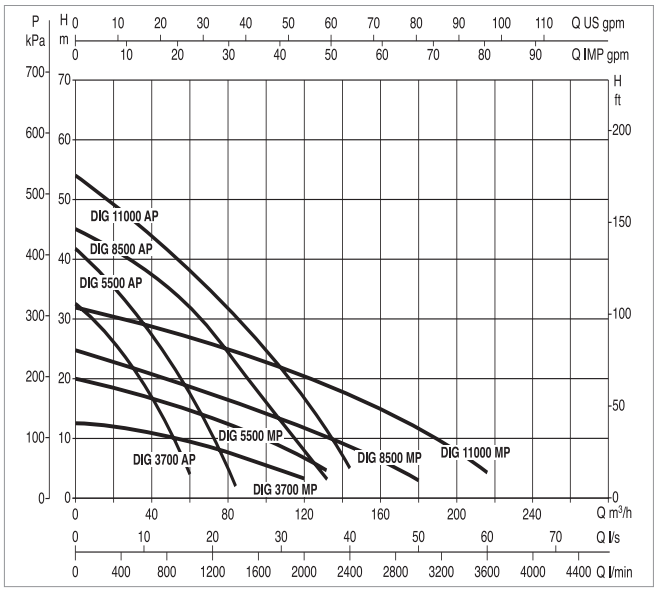

The performance curves are based on kinematic viscosity values = 1 mm^2/s and density equal to 1000 kg/m^3. Curve tolerance according to ISO 9906.

MODEL	ELECTRICAL DATA				
	POWER INPUT 50 Hz	P1 MAX kW	P2 NOMINAL		In A
			kW	HP	
DIG 3700 AP T-NA	3 x 400 V ~	4.2	3.7	5	7.7
DIG 3700 MP T-NA	3 x 400 V ~	4.3	3.7	5	7.8
DIG 5500 AP T-NA	3 x 400 V ~	7.0	5.5	7.5	12.0
DIG 5500 MP T-NA	3 x 400 V ~	5.4	5.5	7.5	10.0
DIG 8500 AP T-NA	3 x 400 V ~	10.4	8.5	11.4	19.0
DIG 8500 MP T-NA	3 x 400 V ~	9.9	8.5	11.4	16.0
DIG 11000 AP T-NA	3 x 400 V ~	13.6	11	15	22.5
DIG 11000 MP T-NA	3 x 400 V ~	12.5	11	15	21.5

MODEL	A	B	C	D	E DNM	FREE PASSAGE mm	PACKING DIMENSIONS			VOLUME (m^3)	WEIGHT kg
							L/A	L/B	H		
DIG 3700 AP T-NA	326	840	685	775	3"	10	600	800	1050	0.5	90
DIG 3700 MP T-NA	326	794	685	775	4"	10	600	800	1050	0.5	90
DIG 5500 AP T-NA	326	840	685	775	3"	10	600	800	1050	0.5	96
DIG 5500 MP T-NA	326	794	685	775	4"	10	600	800	1050	0.5	96
DIG 8500 AP T-NA	404	894	773	862	4"	10	600	800	1050	0.5	150
DIG 8500 MP T-NA	404	894	773	862	6"	10	600	800	1050	0.5	150
DIG 11000 AP T-NA	404	894	773	862	4"	10	600	800	1050	0.5	165
DIG 11000 MP T-NA	404	894	773	862	6"	10	600	800	1050	0.5	165

DAB PUMPS reserves the right to make modifications without notice.

GRINDER 1000-1200-1600

SUBMERSIBLE PUMPS

TECHNICAL DATA

Operating range:
from 3 to 18 m^3/h with head up to 23 metres.
Pumped liquid:
water loaded with filamentous matter, paper or textile material, generally for use in domestic or civil sewage waste systems without grids, compatibly with the construction materials.
Liquid temperature range: from 0 °C to 35 °C.
Maximum immersion depth:
20 metres (with cable of appropriate length).
Motor protection class: IP 68.
Insulation class: F.
Standard voltage: 220-240 V - 50Hz single-phase.
380-415 V - 50Hz three-phase.
Power cable: H07RN-F, standard length 10 metres.
Supplied with: UNI 1092 PN 6 flange
Installation: fixed using a coupling device, or free in the vertical position.
Continuous duty with completely submerged pump.

APPLICATIONS

Submersible cast iron pump with grinder for lifting water loaded with filamentous matter, paper or textile material, generally for use in domestic or civil sewage waste systems without grids.

CONSTRUCTION FEATURES OF THE PUMP

ENGJL 200 cast-iron cover, motor body, hydraulic body and impeller; AISI 440C grinder.
Double carbon/alumina mechanical seal in oil chamber.

CONSTRUCTION FEATURES OF THE MOTOR

Dry, asynchronous and waterproof motor, cooled by the surrounding liquid.
Continuous S1 duty with completely submerged pump.
Rotor mounted on permanently lubricated ball bearings, oversized to ensure long-term reliability and extended lifetime.
In the single-phase version, the pump is supplied with capacitor housed in an appropriate box with circuit breaker that enables start-up. The automatic version is also supplied with a float.
Single-phase version supplied with float and control panel with overload protection and start-up capacitors.
Number of poles: 2
Max starts/hour: 15

MATERIALS

N.	PARTS*	MATERIALS
1	POWER INPUT CABLE	H07RN-F
2	UPPER COVER	EN GJL 200 CAST IRON
3	MOTOR BODY	EN GJL 200 cast iron
4	MOTOR SHAFT	AISI 420
5	OR	NBR
6	BEARING FLANGE	EN GJL 200 cast iron
7	MECHANICAL SEAL	Motor: Carbon graphite - Alumina Pump: Carbon graphite - Alumina
8	RADIAL SEAL	NBR
9	IMPELLER	EN GJL 200 CAST IRON
10	HYDRAULIC BODY	EN GJL 200 CAST IRON
11	GRINDER	HARD AISI 440C STEEL

* In contact with the liquid

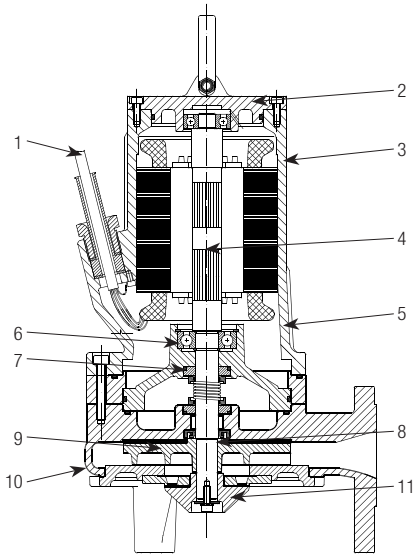

PERFORMANCE RANGE

The performance curves are based on kinematic viscosity values = 1 mm²/s and density equal to 1000 kg/m³. Curve tolerance according to ISO 9906.

GRAPHIC SELECTION TABLE

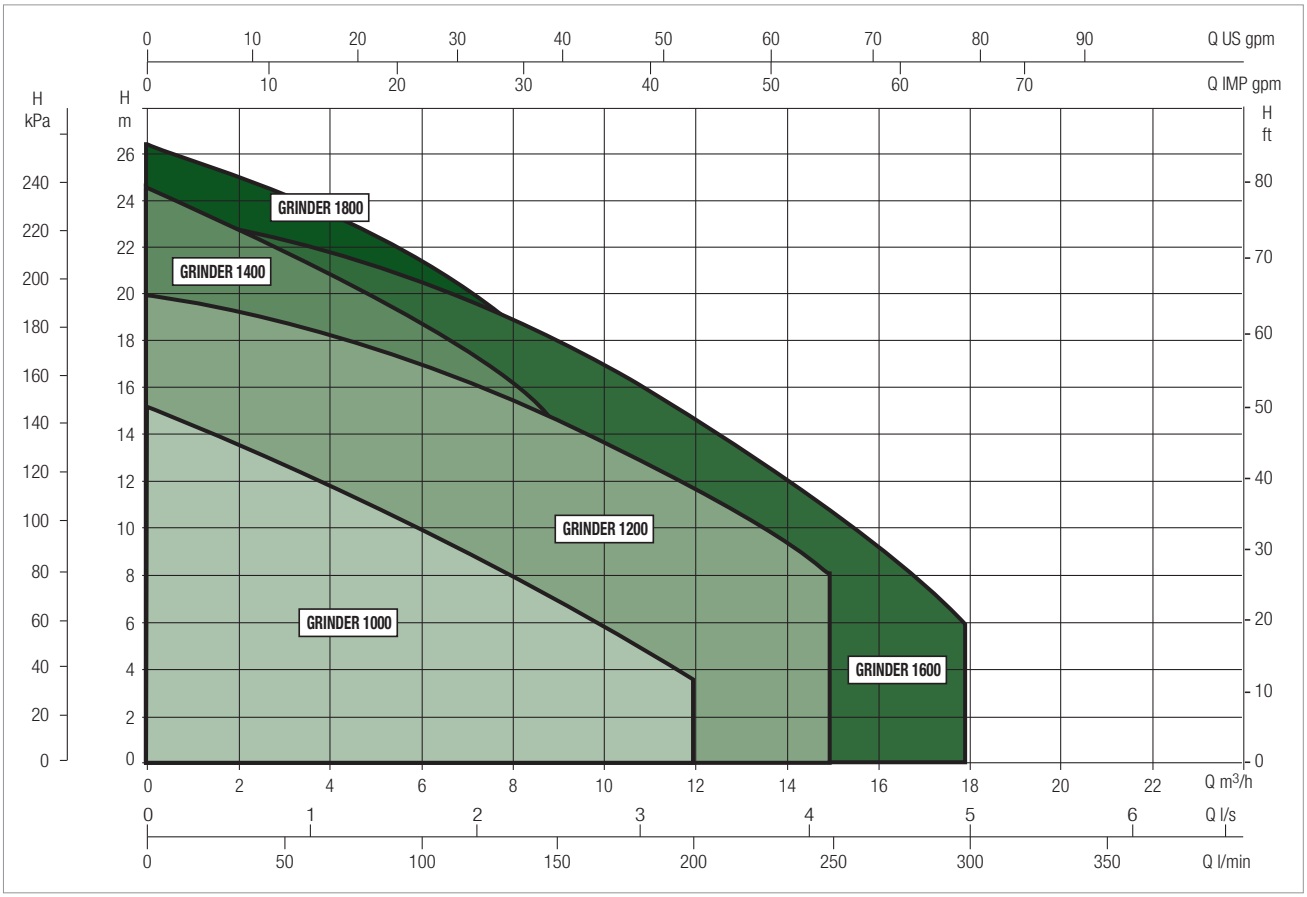

SELECTION TABLE - GRINDER 1000-1200-1600

MODEL	Q= m³/h	0	3	6	9	12	15	18
	Q=l/min	0	50	100	150	200	250	300
GRINDER 1000 M-T	H (m)	15.2	12.9	10	6.9	3.6		
GRINDER 1200 M-T		20	13.9	17	14.7	11.7	8.1	4.2
GRINDER 1600 M-T		23.5	22.3	20.6	18	14.8	11	5.7

DAB PUMPS reserves the right to make modifications without notice.

GRINDER 1000-1200-1600 - SUBMERSIBLE PUMPS FOR LIFTING WASTE WATER FOR GRINDING

Liquid temperature range: from 0 °C to +35 °C

Fig. A

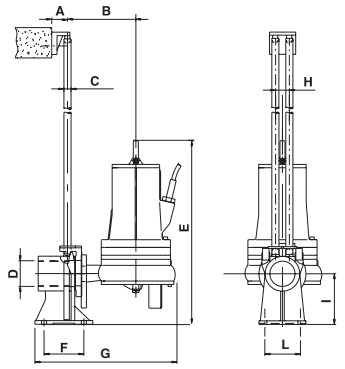

Fig. B

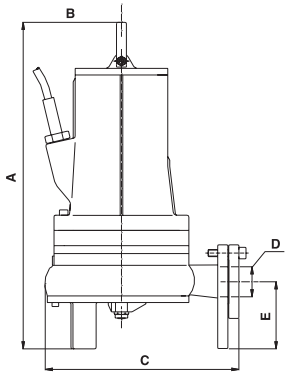

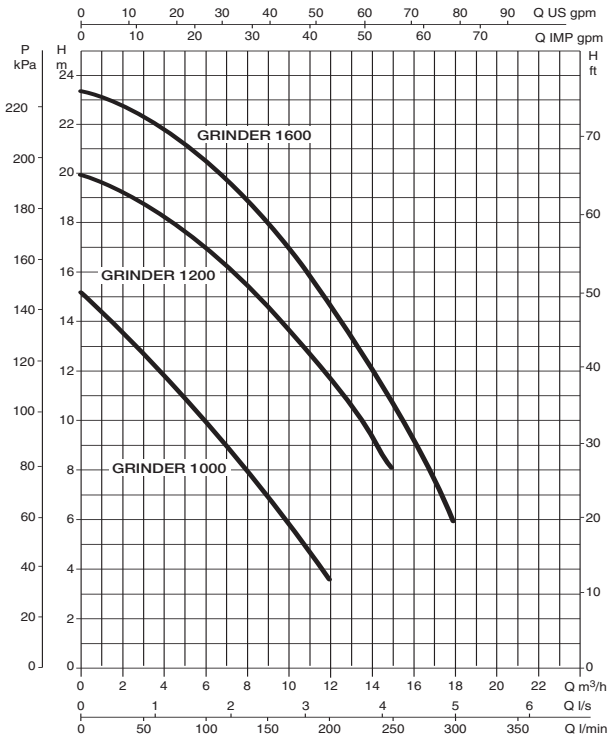

The performance curves are based on kinematic viscosity values = 1 mm²/s and density equal to 1000 kg/m³. Curve tolerance according to ISO 9906.

MODEL	ELECTRICAL DATA						
	POWER INPUT 50 Hz	P1 MAX kW	P2 NOMINAL		In A	CAPACITOR	
			kW	HP		µF	Vc
GRINDER 1000 M-A	1 x 220 - 240 V ~	1.5	1	1.3	8	30+40	450
GRINDER 1000 M-NA	1 x 220 - 240 V ~	1.5	1	1.3	8	30+40	450
GRINDER 1000 T	3 x 400 V ~	1.6	1	1.3	2.8	-	-
GRINDER 1200 M-A	1 x 220 - 240 V ~	2.8	1.5	2	12.7	35+40	450
GRINDER 1200 M-NA	1 x 220 - 240 V ~	2.8	1.5	2	12.7	35+40	450
GRINDER 1200 T	3 x 400 V ~	2.7	1.5	2	4.7	-	-
GRINDER 1600 M-A	1 x 220 - 240 V ~	3.8	1.8	2.4	16.8	35+40	450
GRINDER 1600 M-NA	1 x 220 - 240 V ~	3.8	1.8	2.4	16.8	35+40	450
GRINDER 1600 T	3 x 400 V ~	3.3	1.8	2.4	5.8	-	-

MODEL (FIG. A)	A	B	C Ø	D	E	F	G	H	I	L
GRINDER 1000	50	160	¾"	2"G	540	85	410	38	130	94
GRINDER 1200	50	160	¾"	2"G	540	85	410	38	130	94
GRINDER 1600	50	160	¾"	2"G	540	85	410	38	130	94

MODEL (FIG. B)	A	B	C	E	DNM GAS	PACKING DIMENSIONS			VOLUME (m³)	WEIGHT kg
						L/A	L/B	H		
GRINDER 1000	445	145	270	110	2"	680	330	446	0.1	38
GRINDER 1200	445	145	270	110	2"	680	330	446	0.1	39
GRINDER 1600	445	145	270	110	2"	680	330	446	0.1	40

DAB PUMPS reserves the right to make modifications without notice.

GRINDER 1400-1800

SUBMERSIBLE PUMPS

TECHNICAL DATA

Operating range: from 2 to 9 m^3/h with head up to 24,5 m for the single-phase version, and 26,5 m for the three-phase version.
Pumped liquid: grey waste water, rough loaded water containing solid matter and/or long fibre, non aggressive.
Liquid temperature range: from 0 °C to +55 °C
Maximum ambient temperature for operation with motor above water: +40 °C
Max. immersion depth: 7 metres.
Protection class: IP68
Insulation class: F
Standard voltage: 220-240 V - 50Hz single-phase.
380-415 V - 50Hz three-phase.
Power cable: H07RN-F, 10 metres.
Installation: fixed or portable, vertical position.

APPLICATIONS

Cast-iron centrifugal submersible pump with grinder, suitable for lifting and decanting dirty waste civil and industrial water. Thanks to the grinding system, the matter found in the sewage (organic waste, textiles, rubber, etc.), is ground, enabling the lifting of the liquid without the risk of clogging or obstruction in the delivery piping.

CONSTRUCTION FEATURES OF THE PUMP

Cast-iron pump body, motor casing and suction cover. High resistance cast-iron ring impeller. Microcast tempered steel grinder to ensure strength and durability. Stainless steel rotor shaft, handle, and bolts and screws. Inspectable oil seal chamber. Silicon carbide mechanical seal. GAS threaded 2" radial delivery port, to facilitate the installation of lifting devices (DSD 2).

CONSTRUCTION FEATURES OF THE MOTOR

Continuous duty, dry asynchronous submersible motor in watertight casing. Rotor running on ball bearings, oversized and permanently lubricated. Thermal protection in the winding, to be connected to the control panel.
In order to operate, the pumps must be equipped with control and protection systems, supplied separately
and not connected to the electric pumps. The single-phase version must be equipped with an ED HS control panel.
Supplied with 10 metre neoprene rubber power input cable 6x(4x1,5)+(2x0,5).
Number of poles: 2
Max starts/hour: 20

MATERIALS

N.	PARTS*	MATERIALS
1	PUMP BODY	CAST IRON 200 UNI ISO 185
4	IMPELLER	CAST IRON 200 UNI ISO 185
7	MOTOR SHAFT	AISI 416 STAINLESS STEEL X12CrS13 - UNI 6900/71
10	MOTOR CASING	CAST IRON 200 UNI ISO 185
16	MECHANICAL SEAL	SILICON CARBIDE
28	OR RING	VITON
29	OR RING	VITON
35	SUCTION COVER	CAST IRON 200 UNI ISO 185
77	PROTECTION COVER	CAST IRON 200 UNI ISO 185
120	HANDLE	AISI 304 STAINLESS STEEL X5CrNi 1810- UNI 6900/71
147	FIXED GRINDER SECTION	AISI 440 TEMPERED STAINLESS STEEL
148	FIXED GRINDER SECTION	AISI 440 TEMPERED STAINLESS STEEL

* In contact with the liquid

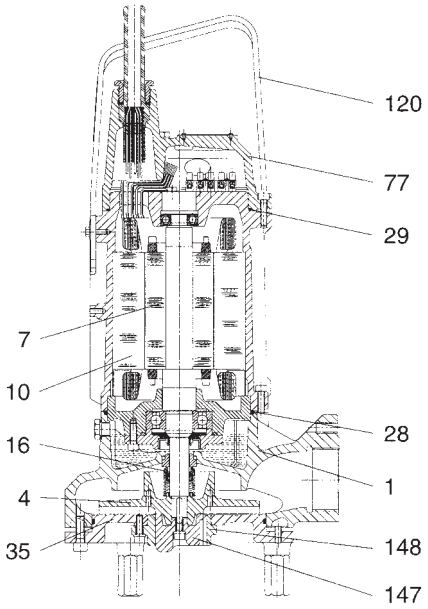

GRINDER RANGE

SUBMERSIBLE PUMPS

PERFORMANCE RANGE

The performance curves are based on kinematic viscosity values = 1 mm²/s and density equal to 1000 kg/m³. Curve tolerance according to ISO 9906.

GRAPHIC SELECTION TABLE

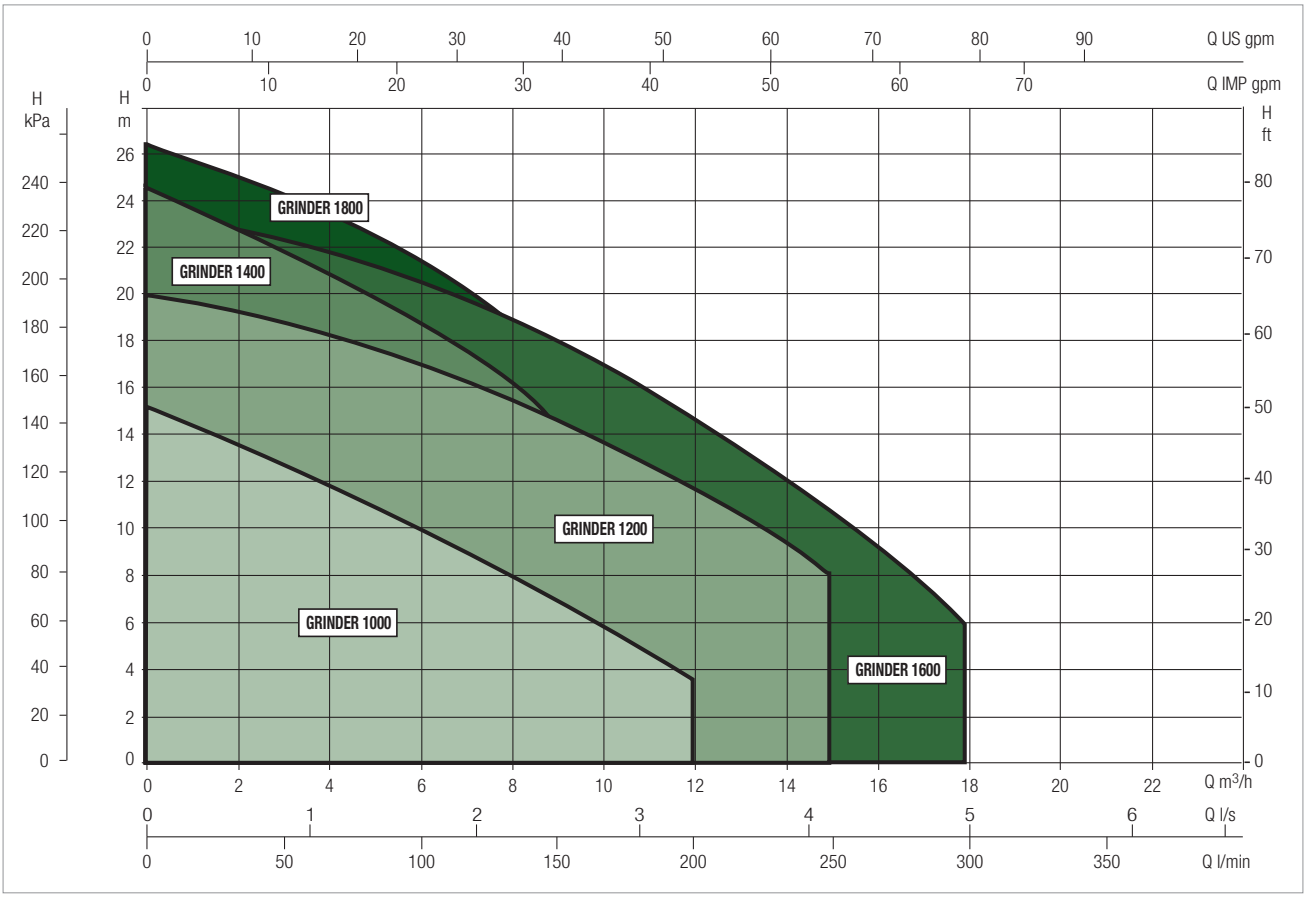

SELECTION TABLE - GRINDER 1400-1800

MODEL	Q= m³/h	0	3	6	9	12	15	18
	Q=l/min	0	50	100	150	200	250	300
GRINDER 1400 M	H (m)	24.5	22.3	19	14.1			
GRINDER 1800 M		25.3	25	22.3	19.9	16		

GRINDER 1400 - 1800 - SUBMERSIBLE PUMPS FOR LIFTING WASTE WATER FOR GRINDING

Liquid temperature range: from 0 °C to +55 °C

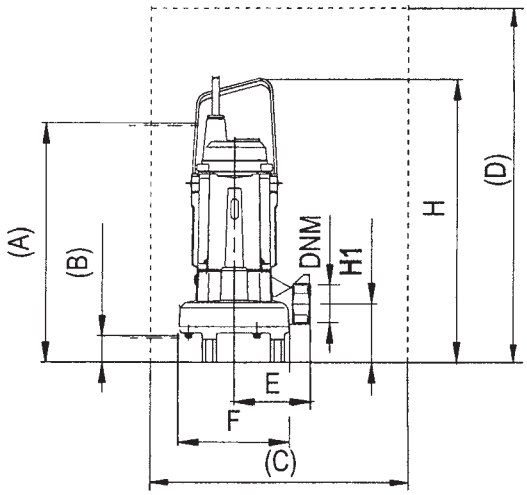

(A) minimum level for continuous operation
(B) minimum residual level in manual operation
(C) minimum well base size
(D) minimum well height size

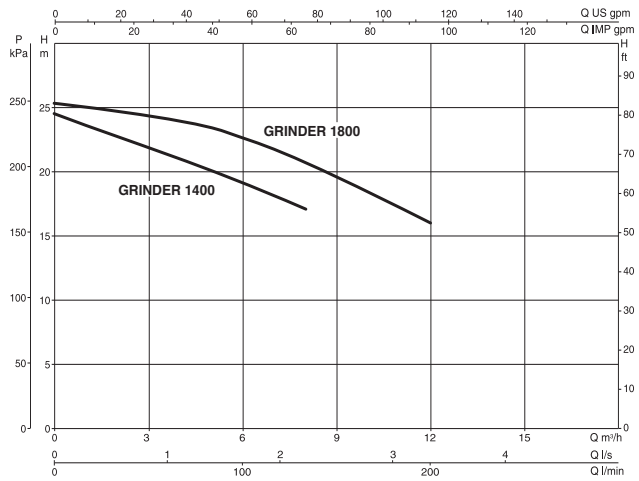

The performance curves are based on kinematic viscosity values = 1 mm²/s and density equal to 1000 kg/m³. Curve tolerance according to ISO 9906.

MODEL	ELECTRICAL DATA						
	POWER INPUT 50 Hz	P1 MAX kW	P2 NOMINAL		In A	CAPACITOR	
			kW	HP		µF	Vc
GRINDER 1400 M	1 x 220 V -240 V ~	1.95	1.1	1.5	8.7	40	450
GRINDER 1800 T	3 x 400 V ~	2	1.5	2	3.8	-	-

MODEL	A	B	C	D	E	F Ø	DNM	H	H1	PACKING DIMENSIONS			VOLUME (m³)	WEIGHT kg
										L/A	L/B	H		
GRINDER 1400 M	500	50	500 X 500 min	600 min	150	219	2" G	549	109	680	330	446	0.1	43.2
GRINDER 1800 T	500	50	500 X 500 min	600 min	150	219	2" G	549	109	680	330	446	0.1	43.8

DAB PUMPS reserves the right to make modifications without notice.

FEKA 600

SUBMERSIBLE PUMPS

TECHNICAL DATA

Version with special stainless steel pump shaft also available.
Operating range:
from 1 to 16 m^3/h with head up to 7,45 metres.
Liquid temperature range:
from 0 °C to +35 °C for domestic use.
Pumped liquid: cesspool sewage water.
Particle size for free passage of solids through the suction grid:

FEKA 600	25 mm

Minimum draught depth:

FEKA 600 A	175 mm
FEKA 600 NA	38 mm

Max. immersion depth: 7 metres.
Maximum dry run time: 1 minute.
Protection class: IP 68.
Insulation class: F.

APPLICATIONS

The submersible pump of the FEKA series is suitable for lifting sewage water from cesspools, and is capable of handling suspended solid matter with size up to 25 mm.

The level switch allows fixed installation, ensuring automatic operation.
Version with special stainless steel pump shaft also available (SV).

CONSTRUCTION FEATURES OF THE PUMP

Hydro resistant technopolymer pump body, cover, and suction grid.
Stainless steel motor, roto shaft, and bolts and screws.
Threefold seal with interposed rings with oil pre-chamber.

CONSTRUCTION FEATURES OF THE MOTOR

Submersible type continuous duty asynchronous motor.
Stator enclosed in airtight stainless steel casing, with an outer cover that protects the wiring and the capacitor.
Rotor running on permanently lubricated ball bearings, oversized to ensure low noise and durability.
Standard built-in thermo-amperometric protection. Capacitor permanently fitted on single phase versions.
For the protection of the three-phase motor, we recommend the use of remote overload cut-outs, in compliance with local regulations.

Construction according to CEI 2-3 and CEI 61-69 (EN 60335-2-41).

Standard voltage:	single-phase	220-240 V / 50 Hz
	three-phase	400 V / 50 Hz

Standard cables for the single-phase version:

5 metre H05 RN-F for	FEKA 600 M-A
10 metre H07 RN-F for	FEKA 600 M-NA

Standard plug for the single-phase version: SCHUKO CEE 7 - VII - UNEL 47166-68

Standard cables for the three-phase version: 5 metres H07 RN-F

DAB PUMPS reserves the right to make modifications without notice.

MATERIALS

N.	PARTS*		MATERIALS
1	PUMP BODY		TECHNOPOLYMER
4	IMPELLER		TECHNOPOLYMER
29	OR RING		NBR
32	STOP RING		12E - UNI 7435 RUST-PROOF
54	MOTOR	CASE	AISI 304 STAINLESS STEEL X5 CrNi 1810 - UNI 6900/71
		ROTOR SHAFT	AISI 416 STAINLESS STEEL X12 CrS13 - UNI 6900/71
			FOR SV VERSION SHAFT IN AISI 431 STAINLESS STEEL
78	ADJUSTMENT RING		TECHNOPOLYMER
79	SUCTION GRID		TECHNOPOLYMER
83	FLOAT		TECHNOPOLYMER

* In contact with the liquid

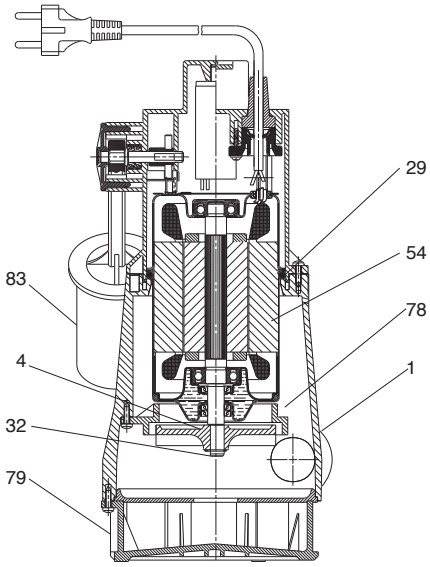

MODEL	WITH FLOAT (A)	WITHOUT FLOAT (NA)
FEKA 600	YES	YES

MINIMUM WELL SIZE FOR AUTOMATIC OPERATION FIXED INSTALLATION:

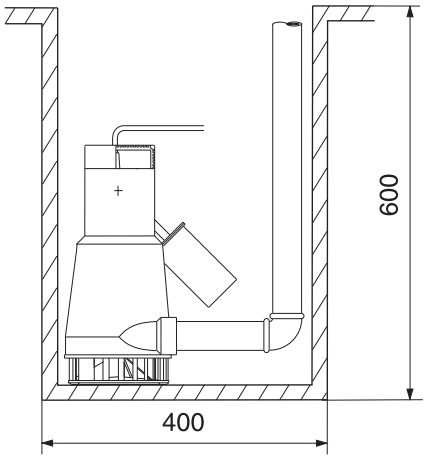

PERFORMANCE RANGE

The performance curves are based on kinematic viscosity values = 1 mm²/s and density equal to 1000 kg/m³. Curve tolerance according to ISO 9906.

GRAPHIC SELECTION TABLE

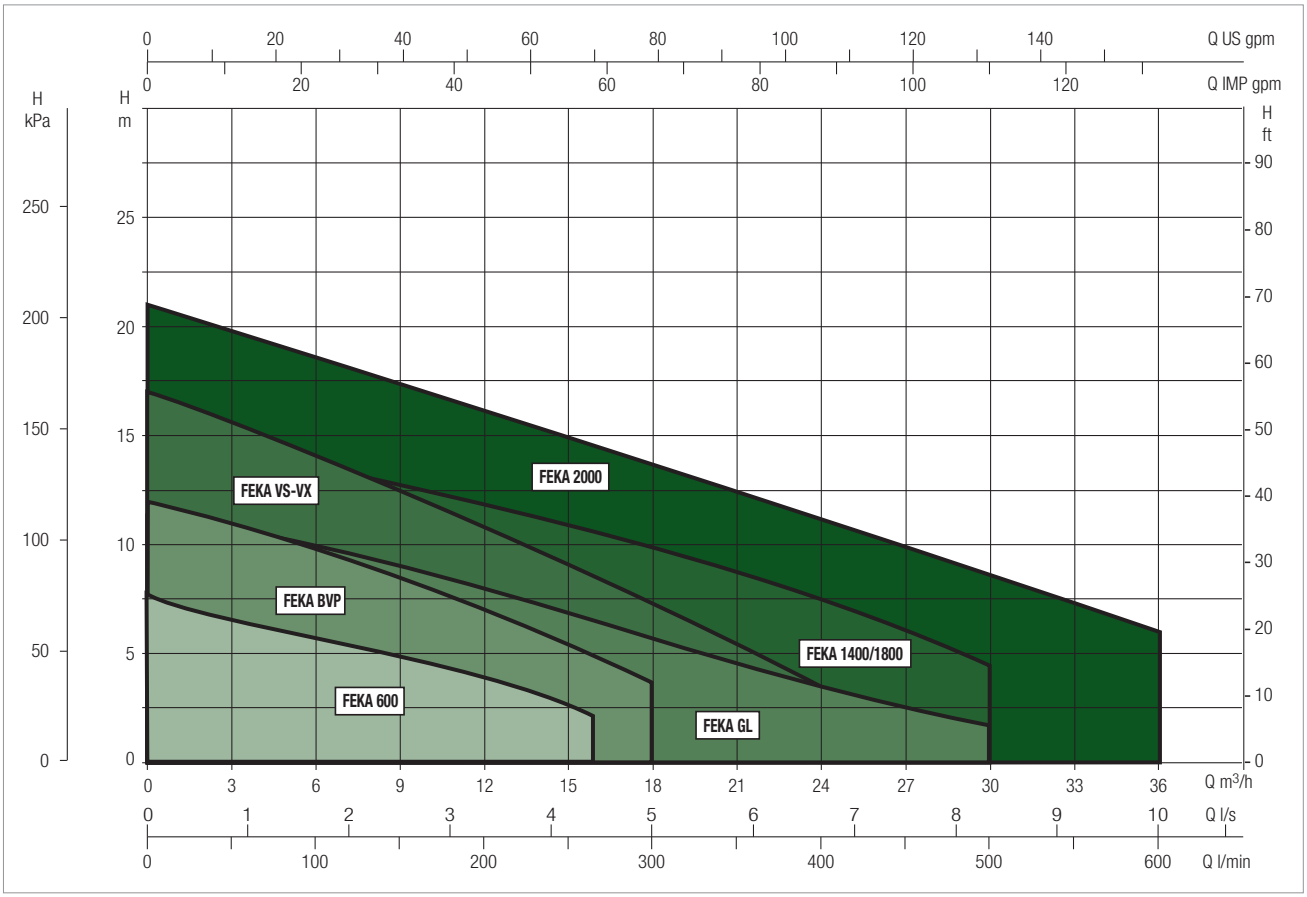

SELECTION TABLE - FEKA 600

MODEL	Q= m³/h	0	3	6	9	12	15	18	24	30	36
	Q=l/min	0	50	100	150	200	250	300	400	500	600
FEKA 600 M-T	H (m)	7.45	6.45	5.7	4.95	4.1	2.8				

FEKA 600 - SEWAGE WATER DRAINING SUBMERSIBLE PUMPS FOR DOMESTIC USE

Liquid temperature range: from 0 °C to +35 °C for domestic use

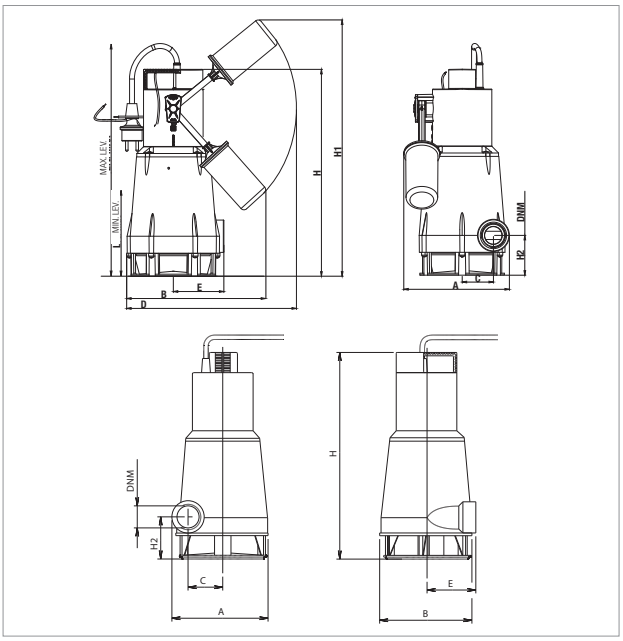

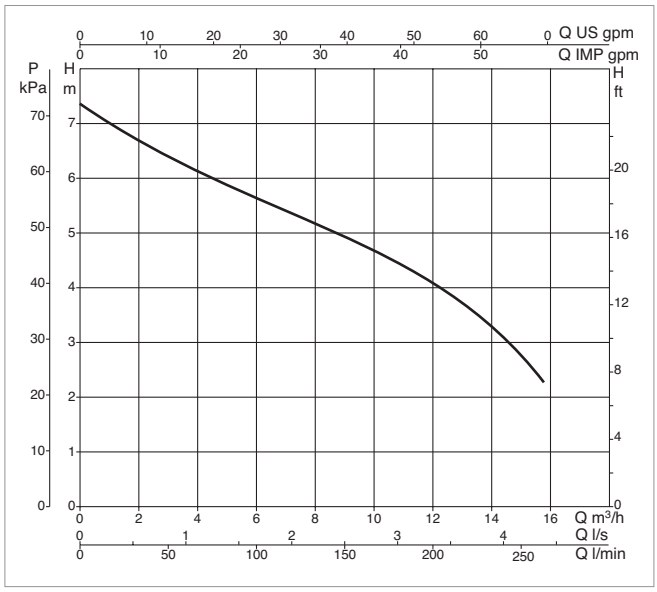

The performance curves are based on kinematic viscosity values = 1 mm^2/s and density equal to 1000 kg/m^3. Curve tolerance according to ISO 9906.

MODEL	ELECTRICAL DATA						
	POWER INPUT 50 Hz	P1 MAX kW	P2 NOMINAL		In A	CAPACITOR	
			kW	HP		µF	Vc
FEKA 600 M-A	1 x 220 - 240 V ~	0.94	0.55	0.75	4.3	14	450
FEKA 600 T-NA	3 x 400 V ~	1	0.55	0.75	1.7	–	–
FEKA 600 M-A SV*	1 x 220 - 240 V ~	0.94	0.55	0.75	4.3	14	450
FEKA 600 M-NA SV*	1 x 220 - 240 V ~	1	0.55	0.75	4.3	14	450
FEKA 600 T-NA SV*	3 x 400 V ~	1	0.55	0.75	1.7	–	–

A: Automatic with float - NA: Non-automatic, without float

* With special stainless steel pump shaft

MODEL	A	B	C	D	E	H	H1	H2	LEV. MIN.	LEV. MAX.	DNM GAS	PACKING DIMENSIONS			CABLE	VOLUME (m^3)	WEIGHT kg
												L/A	L/B	H			
FEKA 600 M-A	193	235	56	296	90	368	443	73	190	390	1¼"	287	202	431	5 mt. H05	0.025	7
FEKA 600 T-NA	162	160	56	-	90	368	-	73	-	-	1¼"	287	202	431	10 mt. H05	0.025	6.7
FEKA 600 M-A - SV*	193	235	56	296	90	368	443	73	190	390	1¼"	287	202	431	5 mt. H05	0.025	7
FEKA 600 (M-T)-NA - SV*	162	160	56	–	90	368	–	73	–	–	1¼"	287	202	431	10 mt. H05	0.025	6.7

DAB PUMPS reserves the right to make modifications without notice.

FEKA BVP

SUBMERSIBLE PUMPS

TECHNICAL DATA

Operating range:
from 1 to 18 m^3/h with head up to 12 metres.
Liquid temperature range:
from 0 °C to +35 °C.
Pumped liquid:
dirty water with maximum solid particle size 38 mm.
Max. immersion depth: 7 metres.

APPLICATIONS

Powerful submersible pumps for draining and emptying applications. Suitable for pumping dirty water with solid particle size up to 38 mm. Automatic version with float switch for automatic pump start and stop also available

CONSTRUCTION FEATURES OF THE PUMP

Hydro resistant technopolymer pump body, wear-free impellers, cover, and suction grid.
Corrosion and oxidation resistant materials.

CONSTRUCTION FEATURES OF THE MOTOR

Submersible type continuous duty asynchronous motor.
Thermal overheating protection.
Wear-resistant motor shaft.

MATERIALS

N.	PARTS*		MATERIALS
1	CAP		TECHNOPOLYMER
2	FLOAT		TECHNOPOLYMER
3	IMPELLER		TECHNOPOLYMER
4	NUT		A2 DIN982-UNI7473 STAINLESS STEEL
5	V. RING		NBR
6	WASHER		A2 STAINLESS STEEL
7	OR RING		NBR
8	MOTOR RING		TECHNOPOLYMER
9	MOTOR	CASE	ALUMINIUM
		ROTOR SHAFT	AISI 416 STAINLESS STEEL UNI EN 10088-1 X12CRS13
10	OR RING		NBR
11	BODY		TECHNOPOLYMER

* In contact with the liquid

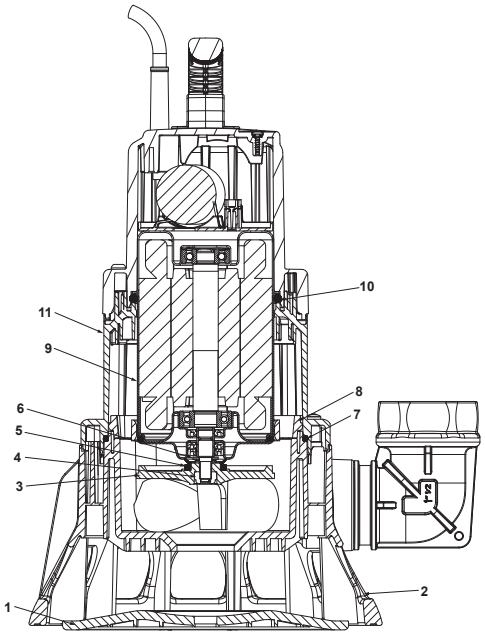

PERFORMANCE RANGE

The performance curves are based on kinematic viscosity values = 1 mm²/s and density equal to 1000 kg/m³. Curve tolerance according to ISO 9906.

GRAPHIC SELECTION TABLE

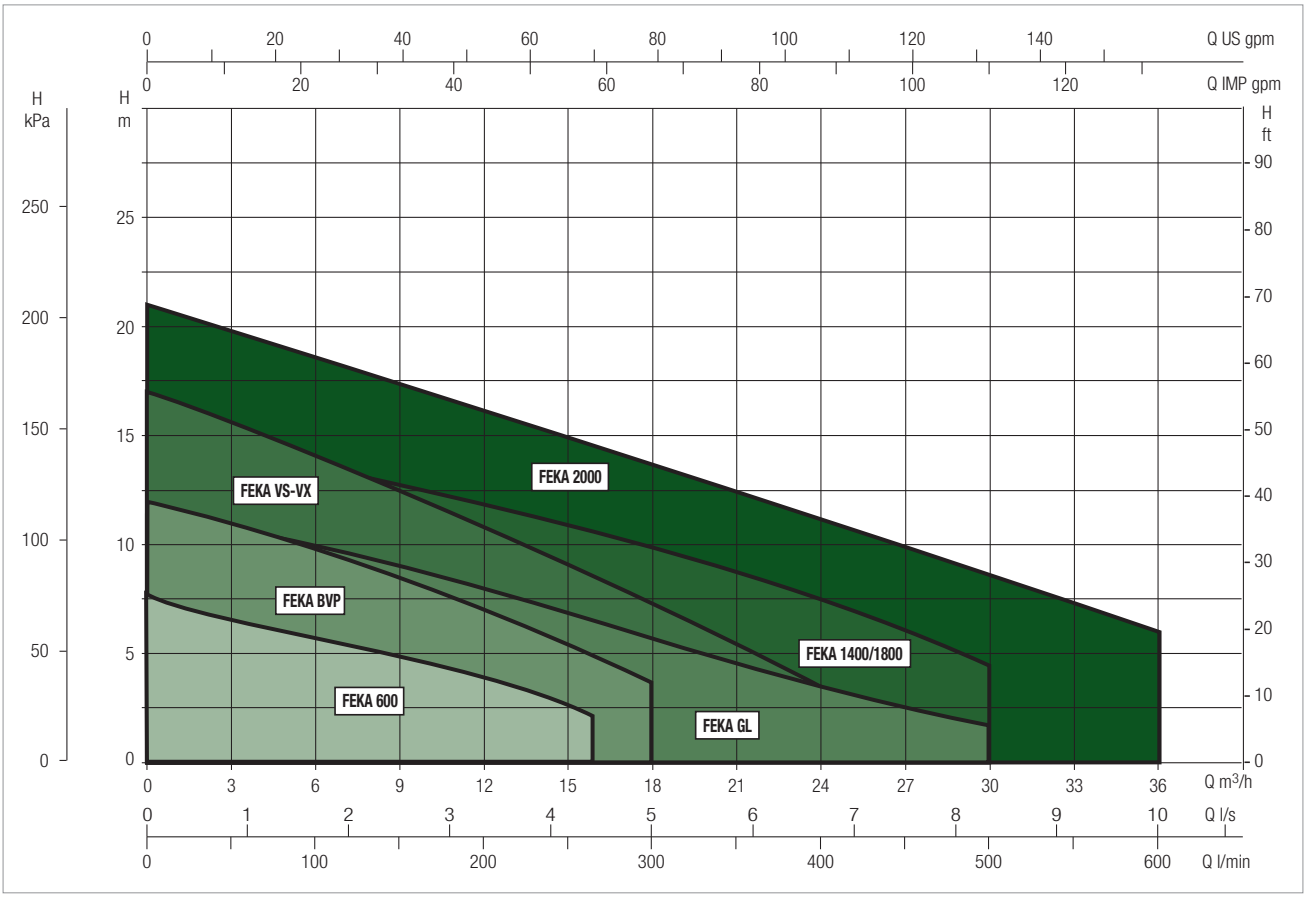

SELECTION TABLE - FEKA BVP

MODEL	Q= m³/h	0	3	6	9	12	15	18	24	30	36
	Q=l/min	0	50	100	150	200	250	300	400	500	600
FEKA BVP 700 M	H (M)	10.5	9.5	8.1	7	5.1	4	1.5			
FEKA BVP 750 M		12	11	9.8	8.8	7	6	3.6			

FEKA BVP - SEWAGE WATER DRAINING SUBMERSIBLE PUMPS FOR DOMESTIC USE

Liquid temperature range: from 0 °C to +35 °C

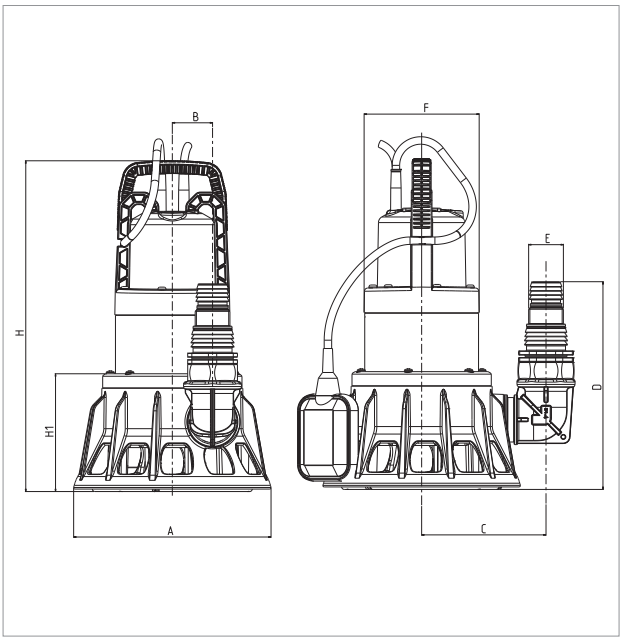

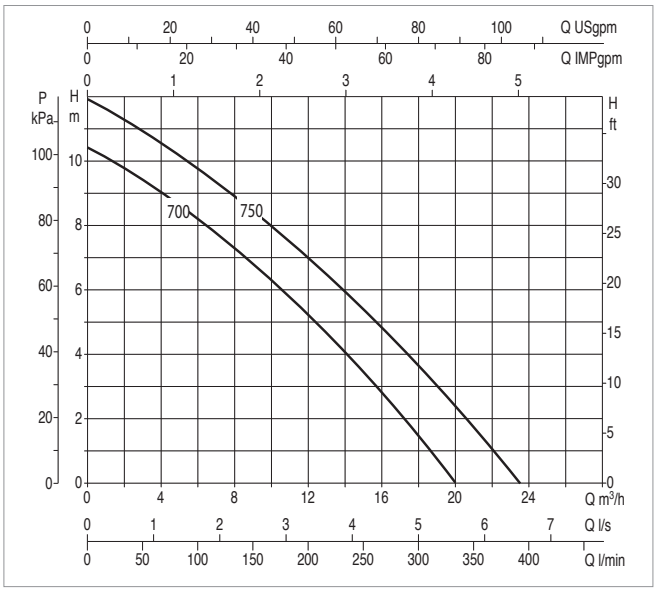

The performance curves are based on kinematic viscosity values = 1 mm^2/s and density equal to 1000 kg/m^3. Curve tolerance according to ISO 9906.

MODEL	ELECTRICAL DATA				
	POWER INPUT 50 Hz	P1 MAX kW	P2 NOMINAL		In A
			kW	HP	
FEKA BVP 700 M-A	1 x 230 V ~	1.0	0.70	0.95	4.6
FEKA BVP 750 M-A	1 x 230 V ~	1.1	0.75	1	5.6

MODEL	A	B	C	D	E	F	H	H1	DNM GAS	PACKING DIMENSIONS			CABLE	VOLUME (m^3)	WEIGHT kg
										L/A	L/B	H			
FEKA BVP 700 M-A	240	49	150	250	M40	140	400	142	1" ½	244	244	442	10 mt.	0.026	27
FEKA BVP 750 M-A	240	49	150	250	M40	140	400	142	1" ½	244	244	442	10 mt.	0.026	27

DAB PUMPS reserves the right to make modifications without notice.

FEKA GL 750 - 1000

SUBMERSIBLE PUMPS

TECHNICAL DATA

Operating range:
from 3 to 28,5 m^3/h with head up to 14 metres.
Pumped liquid:
slightly loaded water, generally for use in the presence of domestic or residential sewage waste, compatibly with the construction materials.
Free passage: 46 mm.
Liquid temperature range: from 0 °C to +35 °C for domestic use.
Maximum immersion depth: 7 metres.
Motor protection class: IP 68.
Insulation class: F.
Standard voltage: 220-240 V - 50Hz single-phase.
380-415 V - 50Hz three-phase.
Power cable: H07RN-F, standard length 10 metres.
Installation: free, vertical position.
Continuous duty with completely submerged pump.

APPLICATIONS

Submersible electric pumps, generally suitable for domestic or residential use, for lifting slightly loaded and sewage water with solid matter with size up to 46 mm.

CONSTRUCTION FEATURES OF THE PUMP

ENGJL 200 cast iron motor body and hydraulic body. Fibreglass reinforced Nylon upper cover and impeller.
Silicon/Silicon mechanical seal.

CONSTRUCTION FEATURES OF THE MOTOR

Dry, asynchronous and waterproof motor, cooled by the surrounding liquid.
Continuous S1 duty with completely submerged pump.
Rotor mounted on permanently lubricated ball bearings, oversized to ensure long-term reliability and extended lifetime.
Capacitor housed in the wiring compartment under the upper cover for the single-phase version.
Number of poles: 2
Max starts/hour: 20

MATERIALS

N.	PARTS*	MATERIALS
1	POWER INPUT CABLE	H07RN-F
2	UPPER COVER	GLASS REINFORCED NYLON
3	MOTOR BODY	EN GJL 200 CAST IRON
4	MOTOR SHAFT	AISI 420
5	OR	NBR
6	BEARING FLANGE	EN GJL 200 CAST IRON
7	MECHANICAL SEAL	PUMP: SILICON - SILICON
8	IMPELLER	GLASS REINFORCED NYLON
9	HYDRAULIC BODY	EN GJL 200 CAST IRON

* In contact with the liquid

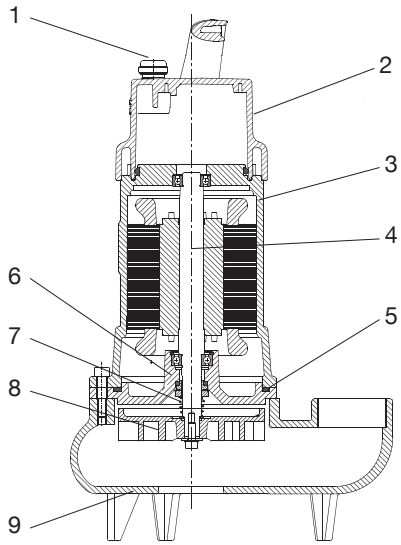

FEKA RANGE

SUBMERSIBLE PUMPS

PERFORMANCE RANGE

The performance curves are based on kinematic viscosity values = 1 mm²/s and density equal to 1000 kg/m³. Curve tolerance according to ISO 9906.

GRAPHIC SELECTION TABLE

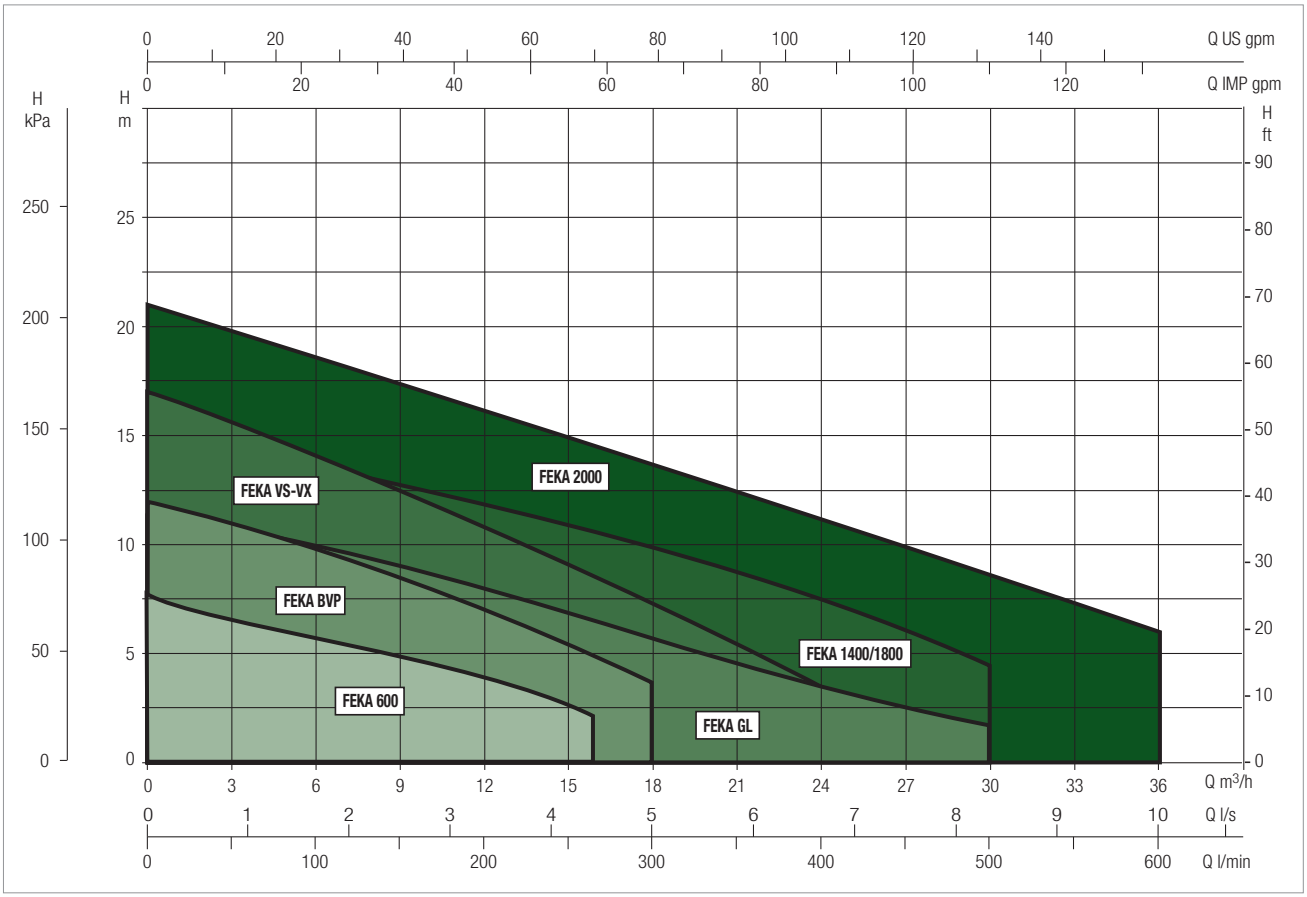

SELECTION TABLE - FEKA GL

MODEL	Q= m³/h	0	3	6	9	12	15	18	24	30	36
	Q=l/min	0	50	100	150	200	250	300	400	500	600
FEKA GL 750 M	H (M)	7.2	6.8	6.2	5.5	4.8	4.1	3.3	1.6		
FEKA GL 1000 M		11.5	10.8	10	9.1	8	7	5.8	3.5	1.8	

DAB PUMPS reserves the right to make modifications without notice.

FEKA GL 750 - 1000 - SUBMERSIBLE PUMPS FOR LIFTING WASTE WATER

Liquid temperature range: from 0 °C to +35 °C for domestic use

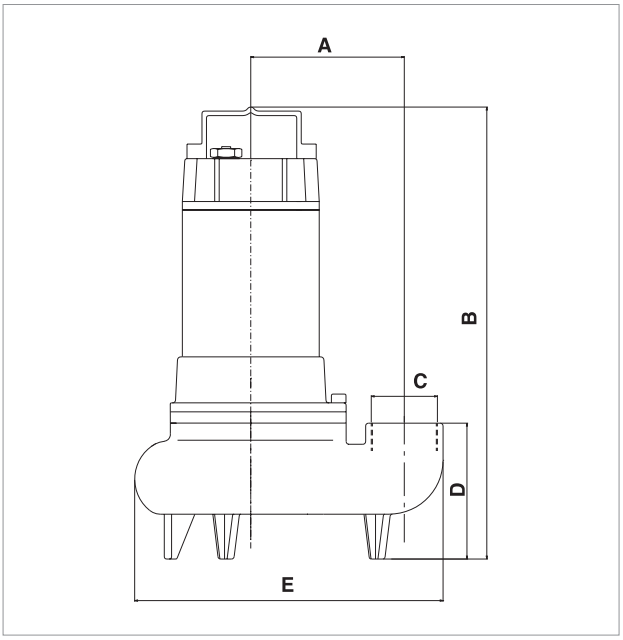

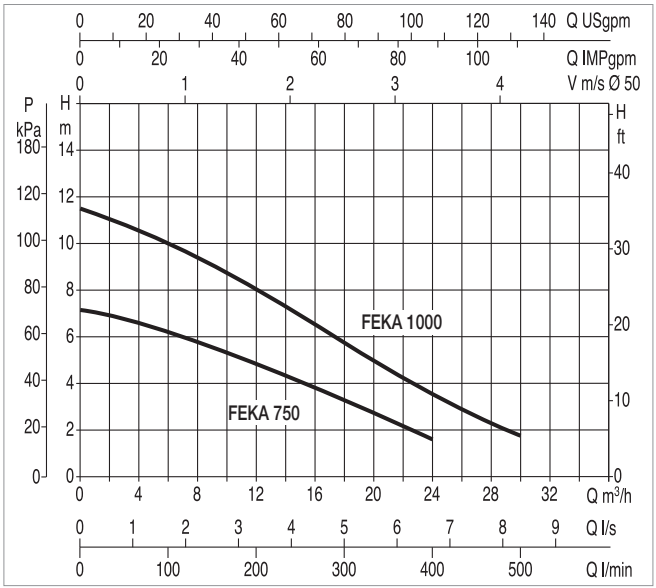

The performance curves are based on kinematic viscosity values = 1 mm²/s and density equal to 1000 kg/m³. Curve tolerance according to ISO 9906.

MODEL	ELECTRICAL DATA						
	POWER INPUT 50 Hz	P1 MAX kW	P2 NOMINAL		In A	CAPACITOR	
			kW	HP		µF	Vc
FEKA GL 750 M-A	1 x 230 V ~	0.9	0.6	0.8	4.1	16	450
FEKA GL 750 M-NA	1 x 230 V ~	0.9	0.6	0.8	4.1	16	450
FEKA GL 1000 M-A	1 x 230 V ~	1.6	1.1	1.5	7	25	450
FEKA GL 1000 M-NA	1 x 230 V ~	1.6	1.1	1.5	7	25	450

MODEL	A	B	C DNM	D	E	DNM GAS	FREE PASSAGE mm	PACKING DIMENSIONS			VOLUME (m³)	WEIGHT kg
								L/A	L/B	H		
FEKA GL 750 M-A	137	412	2" F	120	275	2"	46	250	270	470	0.032	18
FEKA GL 750 M-NA	137	412	2" F	120	275	2"	46	250	270	470	0.032	18
FEKA GL 1000 M-A	137	412	2" F	120	275	2"	46	250	270	470	0.032	19
FEKA GL 1000 M-NA	137	412	2" F	120	275	2"	46	250	270	470	0.032	19

DAB PUMPS reserves the right to make modifications without notice.

FEKA VS

SUBMERSIBLE PUMPS

TECHNICAL DATA

Operating range:
from 0 to 32 m^3/h with head up to 14 metres.
Pumped liquid: sewage water and used water in general, non aggressive.
Free passage: 50 mm.
Liquid temperature range:
- from 0 °C to +35 °C for domestic use (EN 60335-2-41).
- from 0 °C to +50 °C for other uses.

Maximum ambient temperature for operation with motor above water: +40 °C
Maximum immersion depth: 7 metres.
Motor protection class: IP 68
Insulation class: F
Standard voltage: 220-240 V - 50Hz single-phase.
380-415 V - 50Hz three-phase.
Power cable:
10 metre H07RN-F, with plug for the single-phase version.
Installation: fixed or portable, vertical position.

APPLICATIONS

Stainless steel submersible centrifugal pump with microcast steel liquid vortex impeller, suitable for lifting sewage and drain water in general containing solid matter with size up to 50 mm.

CONSTRUCTION FEATURES OF THE PUMP

AISI 304 stainless steel pump body, seal cover, motor cover, and cap with handle. Microcast steel impeller. Insulating rubber covered handle. AISI 316 stainless steel motor shaft. Double mechanical seal with interposed oil chamber (non-toxic oil) in carbon-alumina on the motor side, and silicon carbide/silicon carbide on the pump side.

CONSTRUCTION FEATURES OF THE MOTOR

Dry, asynchronous and waterproof motor, cooled by the pumped liquid. Rotor running on permanently lubricated ball bearings, selected to ensure low noise and durability. Overcurrent protection as standard for the single-phase version, optional for the three-phase version. Permanently connected capacitor in the single-phase version. Continuous duty with liquid temperature 35 °C and completely submerged pump. The single-phase version can be supplied with float for automatic operation. Power cable: 10 metre H07RN-F, with plug for the single-phase version.
Number of poles: 2
Max starts/hour: 20

MATERIALS

N.	PARTS*		MATERIALS
1	PUMP BODY		AISI 304 STAINLESS STEEL
4	IMPELLER		AISI 304 MICROCAST STEEL
7	MOTOR SHAFT		AISI 316 STAINLESS STEEL
16	MECHANICAL SEAL	PUMP SIDE	SILICON CARBIDE/SILICON CARBIDE
		MOTOR SIDE	CARBON/ALUMINA
36	SEAL COVER		AISI 304 STAINLESS STEEL
54	MOTOR CASING		AISI 304 STAINLESS STEEL
120	HANDLE		AISI 304 STAINLESS STEEL INSULATING RUBBER COATED

* In contact with the liquid

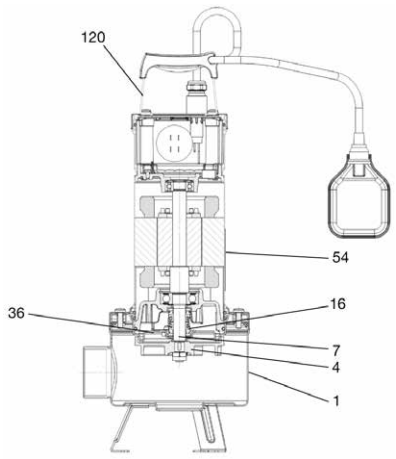

PERFORMANCE RANGE

The performance curves are based on kinematic viscosity values = 1 mm²/s and density equal to 1000 kg/m³. Curve tolerance according to ISO 9906.

GRAPHIC SELECTION TABLE

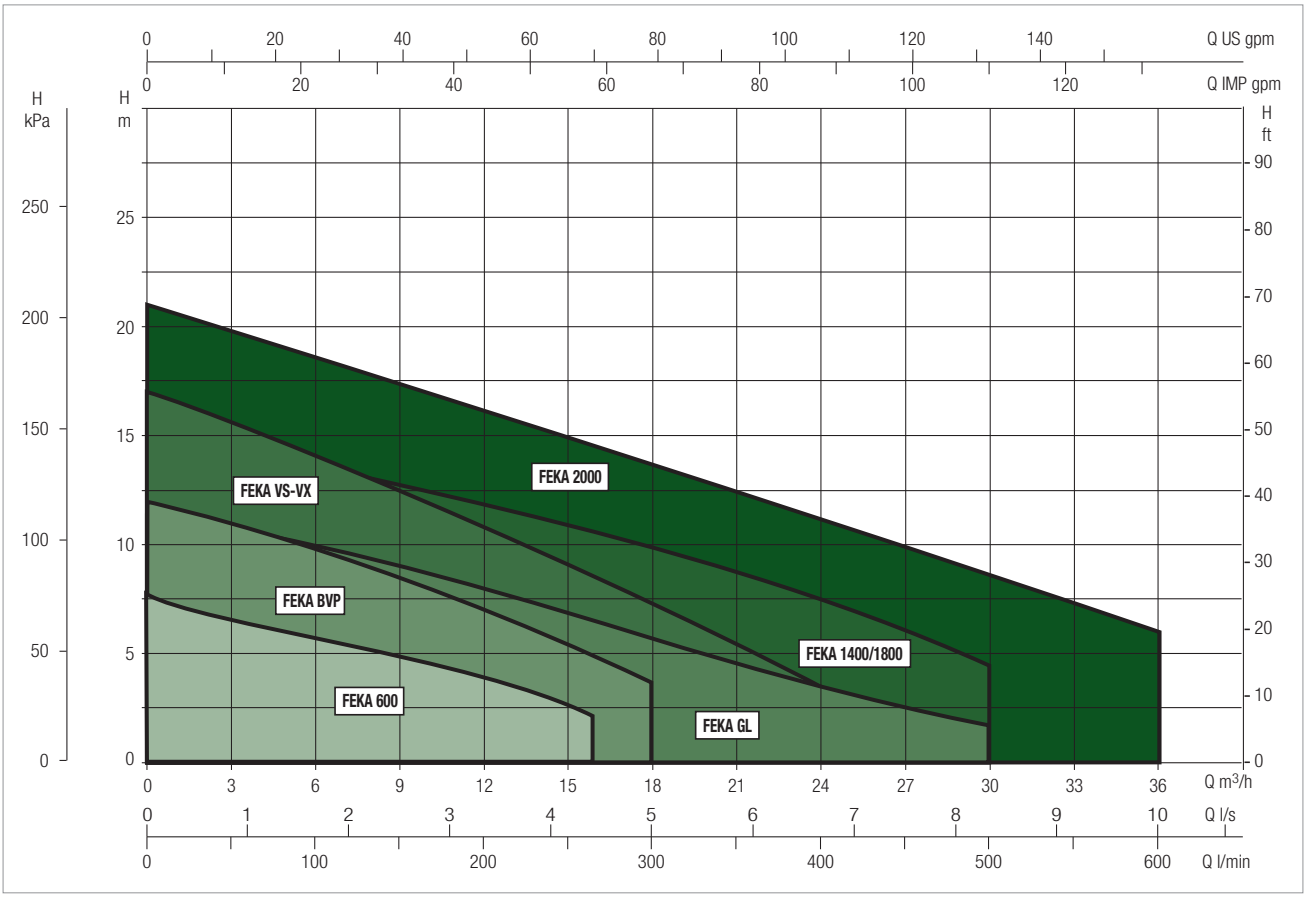

SELECTION TABLE - FEKA VS

MODEL	Q= m³/h	0	3	6	9	12	15	18	24	30	36
	Q=l/min	0	50	100	150	200	250	300	400	500	600
FEKA VS 550 M-T	H (m)	7.4	6.9	6.2	5.6	4.1	3.2	1.8			
FEKA VS 750 M-T		9.6	9.2	8.5	7.6	6.7	5.6	4.3	1.9		
FEKA VS 1000 M-T		11.8	11.3	10.5	9.8	9	8	6.8	4.1		
FEKA VS 1200 M-T		14	13.4	12.8	12	11.2	10.1	9	6.7		

DAB PUMPS reserves the right to make modifications without notice.

FEKA VS - SUBMERSIBLE PUMPS FOR LIFTING WASTE WATER

Liquid temperature range: from 0 °C to +35 °C for domestic use (EN 60335-2-41) - from 0 °C to +50 °C for the other uses.

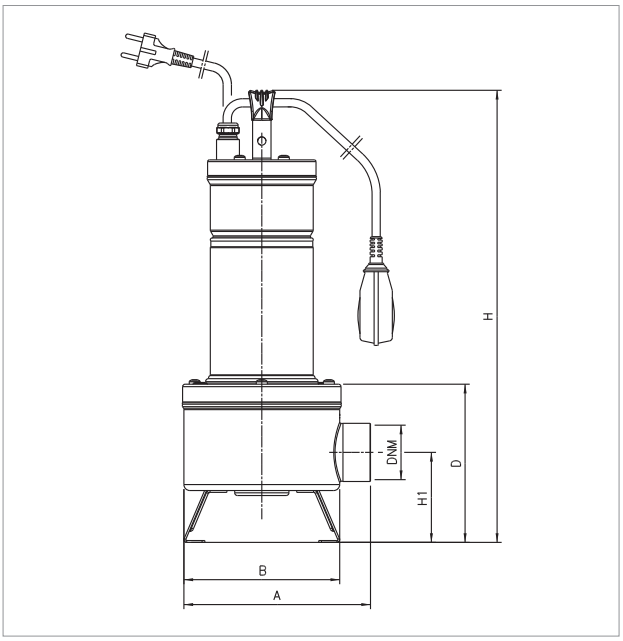

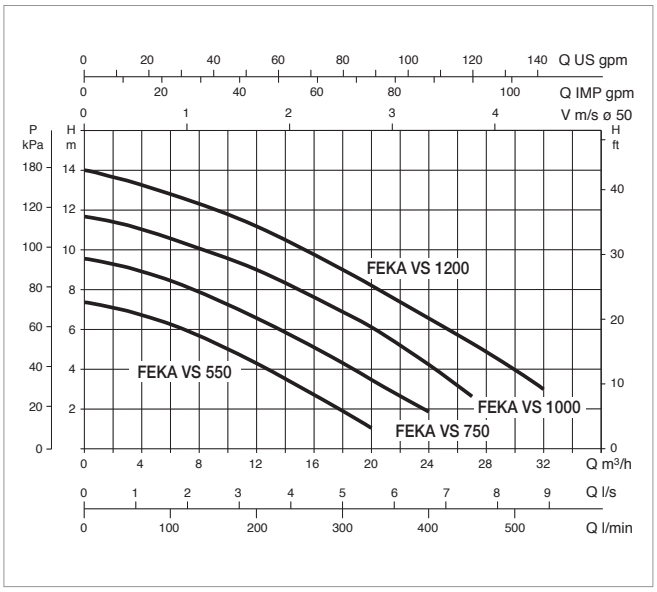

The performance curves are based on kinematic viscosity values = 1 mm²/s and density equal to 1000 kg/m³. Curve tolerance according to ISO 9906.

MODEL	ELECTRICAL DATA							
	POWER INPUT 50 Hz	P1 MAX W	P2 NOMINAL		In A	I st. A	CAPACITOR	
			kW	HP			µF	Vc
FEKA VS 550 M-NA	1 x 220 V -240 V ~	927	0.55	0.75	4.2	20	20	450
FEKA VS 550 M-A	1 x 220 V -240 V ~	927	0.55	0.75	4.2	20	20	450
FEKA VS 550 T-NA	3 x 400 V ~	900	0.55	0.75	1.64	11	-	-
FEKA VS 750 M-NA	1 x 220 V -240 V ~	1111	0.75	1	5.13	20	20	450
FEKA VS 750 M-A	1 x 220 V -240 V ~	1111	0.75	1	5.13	20	20	450
FEKA VS 750 T-NA	3 x 400 V ~	1038	0.75	1	1.94	11	-	-
FEKA VS 1000 M-NA	1 x 220 V -240 V ~	1469	1	1.36	6.63	31	25	450
FEKA VS 1000 M-A	1 x 220 V -240 V ~	1469	1	1.36	6.63	31	25	450
FEKA VS 1000 T-NA	3 x 400 V ~	1374	1	1.36	2.51	16	-	-
FEKA VS 1200 M-NA	1 x 220 V -240 V ~	1936	1.2	1.6	8.63	38	30	450
FEKA VS 1200 M-A	1 x 220 V -240 V ~	1936	1.2	1.6	8.63	38	30	450
FEKA VS 1200 T-NA	3 x 400 V ~	1865	1.2	1.6	3.44	22	-	-

MODEL	A	B	D	H	H1	Ø DNM	PACKING DIMENSIONS			VOLUME (m³)	WEIGHT kg
							L/A	L/B	H		
FEKA VS 550	203	170	172	492	98	2" F	240	600	240	0.034	16.3
FEKA VS 750	203	170	172	492	98	2" F	240	600	240	0.034	16.3
FEKA VS 1000	203	170	172	492	98	2" F	240	600	240	0.034	19.3
FEKA VS 1200	203	170	172	492	98	2" F	240	600	240	0.034	20.8

FIXED INSTALLATION

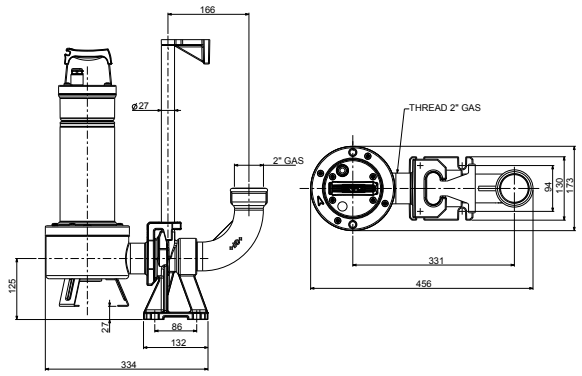

PORTABLE INSTALLATION

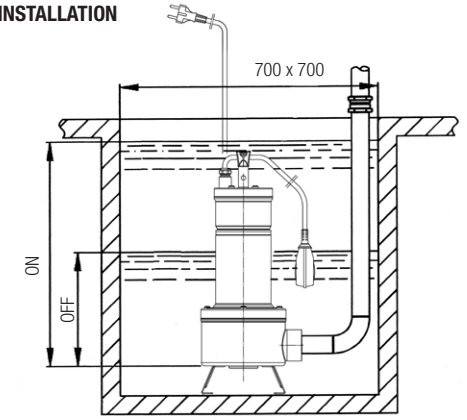

FEKA VX 550-750 ON 670 mm OFF 270 mm
FEKA VX 1000-1200 ON 700 mm OFF 300 mm

FEKA VX

SUBMERSIBLE PUMPS

TECHNICAL DATA

Operating range:
from 0 to 32 m^3/h with head up to 14 metres.
Pumped liquid: sewage water and used water in general, non aggressive.
Free passage: 50 mm.
Liquid temperature range:
- from 0 °C to +35 °C for domestic use (EN 60335-2-41).
- from 0 °C to +50 °C for other uses.

Maximum ambient temperature for operation with motor above water: +40 °C
Maximum immersion depth: 7 metres.
Motor protection class: IP 68
Insulation class: F
Standard voltage: 220-240 V - 50Hz single-phase.
380-415 V - 50Hz three-phase.
Installation: fixed or portable, vertical position.
Power cable:
10 metre H07RN-F, with plug for the single-phase version.

APPLICATIONS

Stainless steel submersible centrifugal pump with technopolymer liquid vortex impeller, suitable for lifting sewage and drain water in general containing solid matter with size up to 50 mm.

CONSTRUCTION FEATURES OF THE PUMP

Technopolymer pump body with threaded metal insert in the delivery port, seal cover, motor casing, and cover with handle in AISI 304 stainless steel. Technopolymer impeller. Insulating rubber covered handle. AISI 316 stainless steel motor shaft. Double mechanical seal with interposed oil chamber (non-toxic oil) in carbon-alumina on the motor side, and silicon carbide/silicon carbide on the pump side.

CONSTRUCTION FEATURES OF THE MOTOR

Dry, asynchronous and waterproof motor, cooled by the pumped liquid. Rotor running on permanently lubricated ball bearings, selected to ensure low noise and durability. Overcurrent protection as standard for the single-phase version, optional for the three-phase version. Permanently connected capacitor in the single-phase version. Continuous duty with liquid temperature 35 °C and completely submerged pump. The single-phase version can be supplied with float for automatic operation. Power cable: 10 metre H07RN-F, with plug for the single-phase version.
Number of poles: 2
Max starts/hour: 20

MATERIALS

N.	PARTS*		MATERIALS
1	PUMP BODY		TECHNOPOLYMER
4	IMPELLER		TECHNOPOLYMER
7	MOTOR SHAFT		AISI 316 STAINLESS STEEL
16	MECHANICAL SEAL	PUMP SIDE	SILICON CARBIDE/SILICON CARBIDE
		MOTOR SIDE	CARBON/ALUMINA
36	SEAL COVER		AISI 304 STAINLESS STEEL
54	MOTOR CASING		AISI 304 STAINLESS STEEL
120	HANDLE		AISI 304 STAINLESS STEEL INSULATING RUBBER COATED

* In contact with the liquid

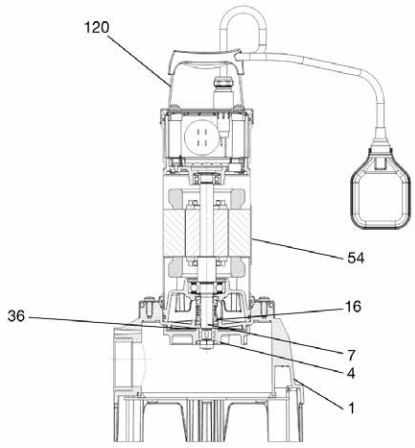

DAB PUMPS reserves the right to make modifications without notice.

FEKA RANGE

SUBMERSIBLE PUMPS

PERFORMANCE RANGE

The performance curves are based on kinematic viscosity values = 1 mm²/s and density equal to 1000 kg/m³. Curve tolerance according to ISO 9906.

GRAPHIC SELECTION TABLE

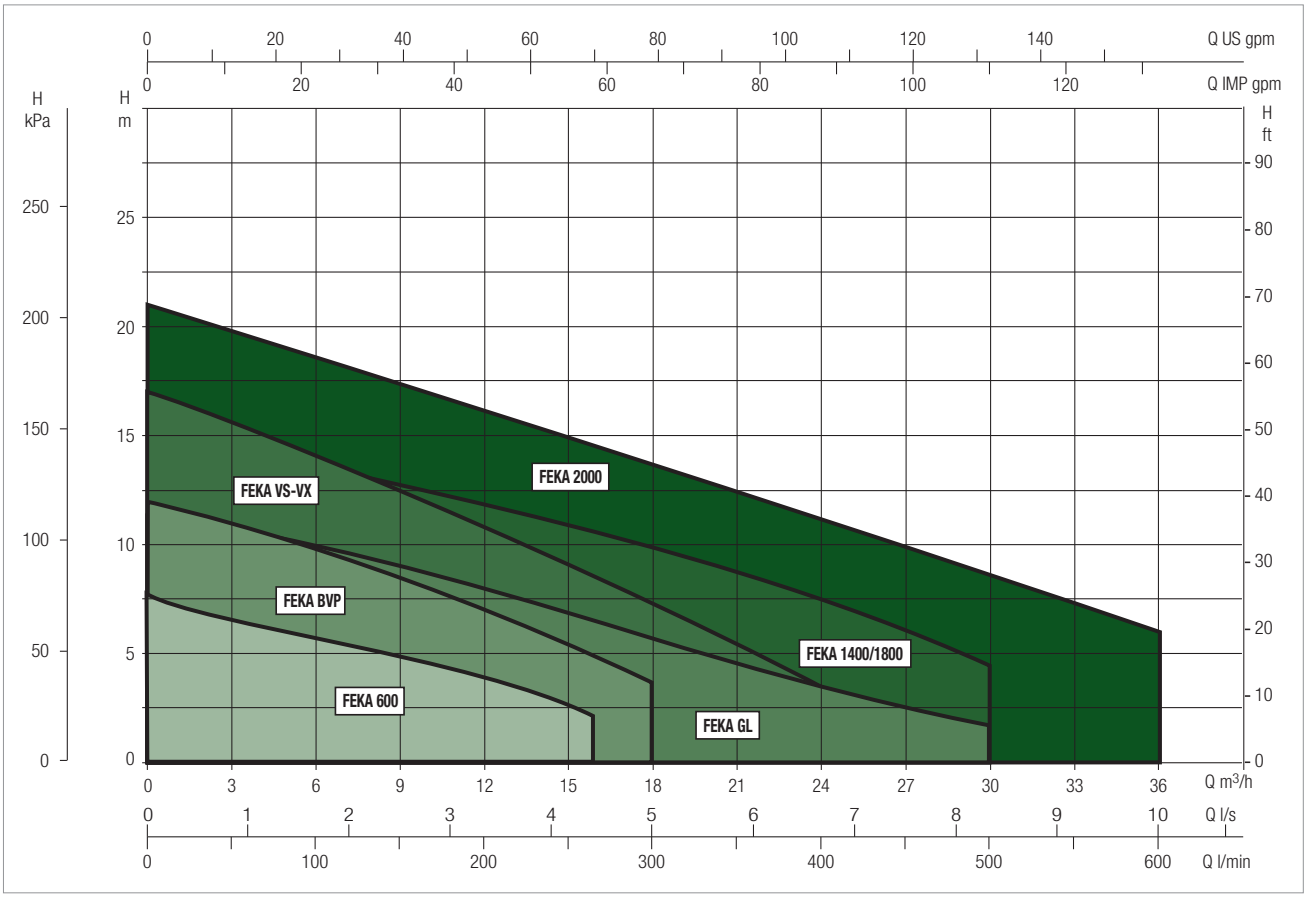

SELECTION TABLE - FEKA VX

MODEL	Q= m³/h	0	3	6	9	12	15	18	24	30	36
	Q=l/min	0	50	100	150	200	250	300	400	500	600
FEKA VX 550 M-T	H (m)	7.4	6.9	6.2	5.6	4.1	3.2	1.8			
FEKA VX 750 M-T		9.6	9.2	8.5	7.6	6.7	5.6	4.3	1.9		
FEKA VX 1000 M-T		11.8	11.3	10.5	9.8	9	8	6.8	4.1		
FEKA VX 1200 M-T		14	13.4	12.8	12	11.2	10.1	9	6.7		

DAB PUMPS reserves the right to make modifications without notice.

FEKA VX - SUBMERSIBLE PUMPS FOR LIFTING WASTE WATER

Liquid temperature range: from 0 °C to +35 °C for domestic use (EN 60335-2-41) - from 0 °C to +50 °C for the other uses.

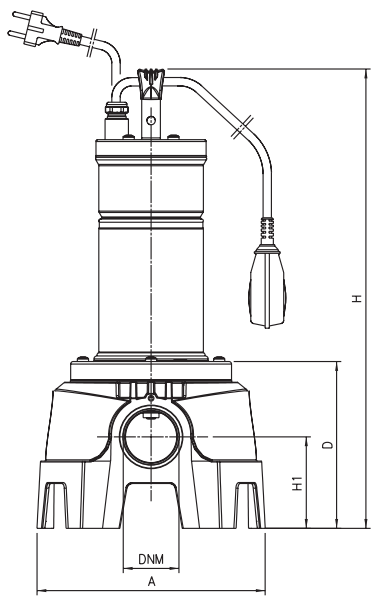

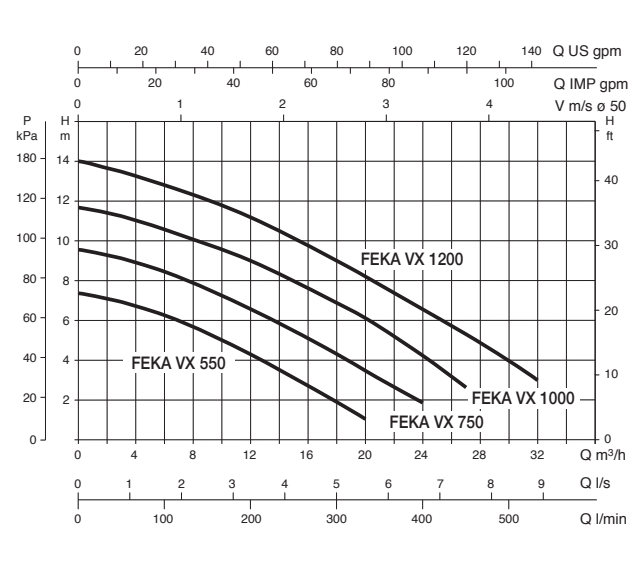

The performance curves are based on kinematic viscosity values = 1 mm²/s and density equal to 1000 kg/m³. Curve tolerance according to ISO 9906.

MODEL	ELECTRICAL DATA							
	POWER INPUT 50 Hz	P1 MAX W	P2 NOMINAL		In A	I st. A	CAPACITOR	
			kW	HP			µF	Vc
FEKA VX 550 M-NA	1 x 220 V -240 V ~	927	0.55	0.75	4.2	20	20	450
FEKA VX 550 M-A	1 x 220 V -240 V ~	927	0.55	0.75	4.2	20	20	450
FEKA VX 550 T-NA	3 x 400 V ~	900	0.55	0.75	1.64	11	-	-
FEKA VX 750 M-NA	1 x 220 V -240 V ~	1111	0.75	1	5.13	20	20	450
FEKA VX 750 M-A	1 x 220 V -240 V ~	1111	0.75	1	5.13	20	20	450
FEKA VX 750 T-NA	3 x 400 V ~	1038	0.75	1	1.94	11	-	-
FEKA VX 1000 M-NA	1 x 220 V -240 V ~	1469	1	1.36	6.63	31	25	450
FEKA VX 1000 M-A	1 x 220 V -240 V ~	1469	1	1.36	6.63	31	25	450
FEKA VX 1000 T-NA	3 x 400 V ~	1374	1	1.36	2.51	16	-	-
FEKA VX 1200 M-NA	1 x 220 V -240 V ~	1936	1.2	1.6	8.63	38	30	450
FEKA VX 1200 M-A	1 x 220 V -240 V ~	1936	1.2	1.6	8.63	38	30	450
FEKA VX 1200 T-NA	3 x 400 V ~	1865	1.2	1.6	3.44	22	-	-

MODEL	A	D	H	H1	Ø DNM	PACKING DIMENSIONS			VOLUME (m³)	WEIGHT kg
						L/A	L/B	H		
FEKA VX 550	245	179	498	98	2" F	360	600	320	0.069	16.7
FEKA VX 750	245	179	498	98	2" F	360	600	320	0.069	17.9
FEKA VX 1000	245	179	498	98	2" F	360	600	320	0.069	19.6
FEKA VX 1200	245	179	498	98	2" F	360	600	320	0.069	21.1

FIXED INSTALLATION

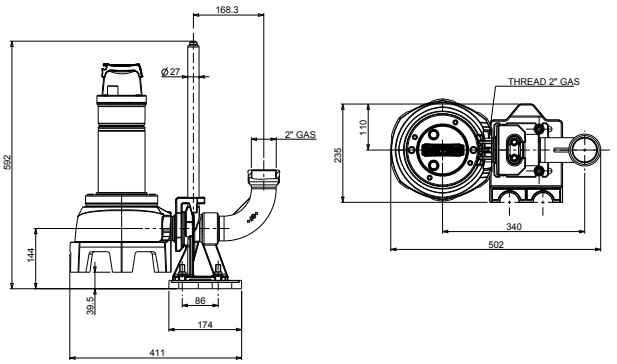

PORTABLE INSTALLATION

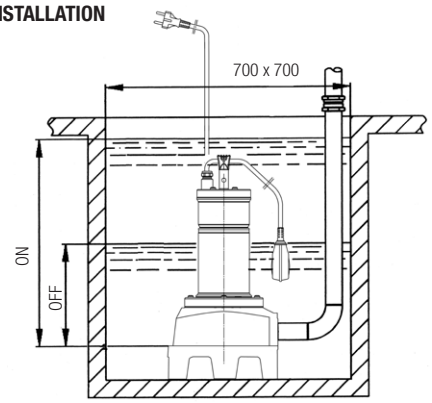

FEKA VX 550-750 ON 670 mm OFF 270 mm
FEKA VX 1000-1200 ON 700 mm OFF 300 mm

FEKA 1400-1800

SUBMERSIBLE PUMPS

TECHNICAL DATA

Operating range: from 6 to 30 m³/h with head up to 14 m for the single-phase version, and 15,5 m for the three-phase version.
Pumped liquid: grey waste water, rough loaded water containing solid matter and/or long fibre, non aggressive.
Free passage: 38 mm.
Liquid temperature range: from 0 °C to +55 °C
Maximum ambient temperature for operation with motor above water: +40 °C
Max. immersion depth: 7 metres.
Installation: fixed or portable, vertical position.
Protection class: IP68
Insulation class: F
Standard voltage: 220-240 V - 50Hz single-phase.
380-415 V - 50Hz three-phase.
Power cable: H07RN-F, 10 metres.

APPLICATIONS

Cast-iron submersible pump with vortex back flowing impeller for cesspools. Suitable for lifting or decanting sewage water from cesspools, and used water in general, containing solid matter with size up to 38 mm. Also suitable for ground water, rain water, clean water and grey waste water, river or lake water.

CONSTRUCTION FEATURES OF THE PUMP

Cast-iron pump body, motor casing, suction cover, and impeller. Stainless steel rotor shaft, handle, and bolts and screws. Inspectable oil seal chamber. Carbon/ceramic mechanical seal. GAS threaded 2" radial delivery port, to facilitate the installation of lifting devices (DSD 2).

CONSTRUCTION FEATURES OF THE MOTOR

Continuous duty, dry asynchronous submersible motor in watertight casing. Rotor running on ball bearings, oversized and permanently lubricated. Thermal protection in the winding, to be connected to the control panel.
In order to operate, the pumps must be equipped with control and protection systems, supplied separately
and not connected to the electric pumps. The single-phase version must be equipped with an ED control panel and built-in capacitor.
Supplied with 10 metre neoprene rubber power input cable 6x(4x1,5)+(2x0,5).
Number of poles: 2
Max starts/hour: 20

MATERIALS

N.	PARTS*	MATERIALS
1	PUMP BODY	CAST IRON 200 UNI ISO 185
4	IMPELLER	CAST IRON 200 UNI ISO 185
7	MOTOR SHAFT	AISI 416 STAINLESS STEEL X12CrS13 - UNI 6900/71
10	MOTOR CASING	CAST IRON 200 UNI ISO 185
16	MECHANICAL SEAL	CARBON / CERAMIC
28	OR RING	VITON
29	OR RING	VITON
35	SUCTION COVER	CAST IRON 200 UNI ISO 185
42	SUCTION STRAINER	CAST IRON 200 UNI ISO 185
77	PROTECTION COVER	CAST IRON 200 UNI ISO 185
120	HANDLE	AISI 304 STAINLESS STEEL X5CrNi 1810- UNI 6900/71

* In contact with the liquid

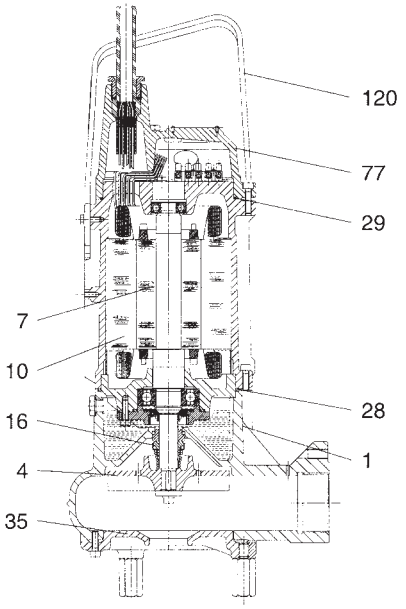

DAB PUMPS reserves the right to make modifications without notice.

PERFORMANCE RANGE

The performance curves are based on kinematic viscosity values = 1 mm²/s and density equal to 1000 kg/m³. Curve tolerance according to ISO 9906.

GRAPHIC SELECTION TABLE

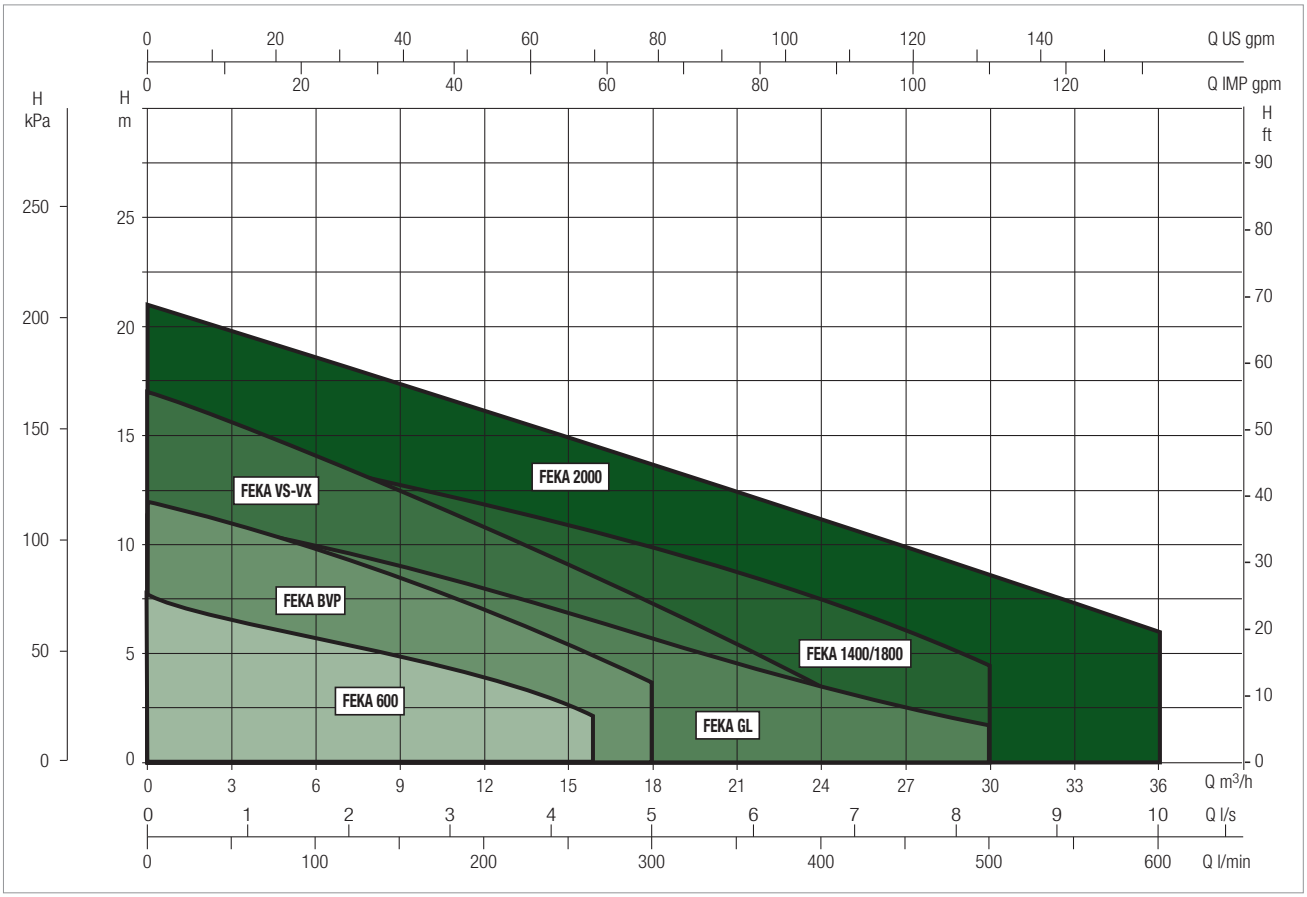

SELECTION TABLE - FEKA 1400-1800

MODEL	Q= m³/h	0	3	6	9	12	15	18	24	30	36
	Q=l/min	0	50	100	150	200	250	300	400	500	600
FEKA 1400 M	H (m)	13.9	13	12	11	9.9	8.9	7.8	5.7	3.4	
FEKA 1800 T		15.5	14	13.7	12.8	11.8	10.7	9.7	7.3	4.5	

DAB PUMPS reserves the right to make modifications without notice.

FEKA 1400 - 1800 - SUBMERSIBLE PUMPS FOR LIFTING WASTE WATER

Liquid temperature range: from 0 °C to +55 °C

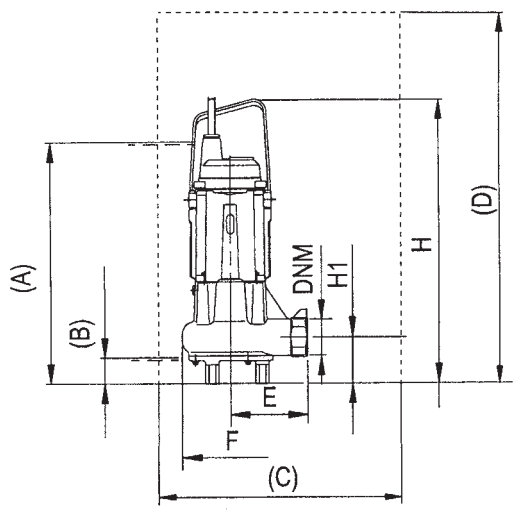

(A) minimum level for continuous operation
(B) minimum residual level in manual operation
(C) minimum well base size
(D) minimum well height size

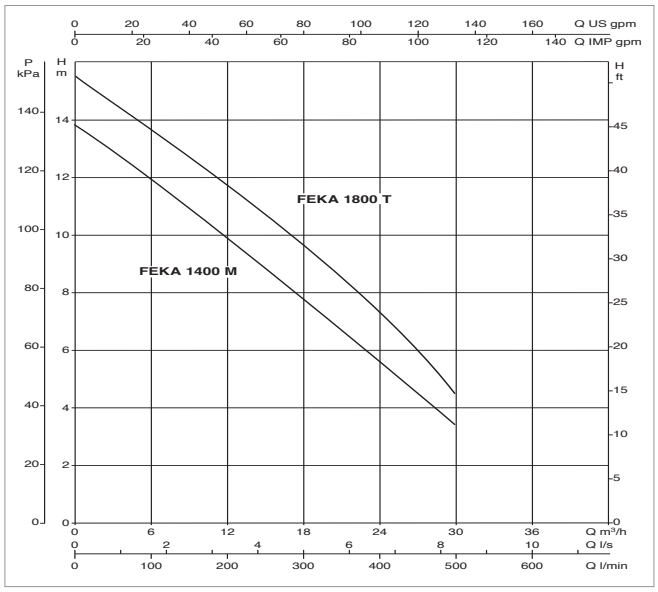

The performance curves are based on kinematic viscosity values = 1 mm^2/s and density equal to 1000 kg/m^3. Curve tolerance according to ISO 9906.

MODEL	ELECTRICAL DATA						
	POWER INPUT 50 Hz	P1 MAX kW	P2 NOMINAL		In A	CAPACITOR	
			kW	HP		µF	Vc
FEKA 1400 M	1 x 220 V -240 V ~	1.8	1.1	1.5	8.5	40	450
FEKA 1800 T	3 x 400 V ~	1.9	1.5	2	3.7	-	-

MODEL	A	B	C	D	E	F Ø	DNM	H	H1	PACKING DIMENSIONS			VOLUME (m^3)	WEIGHT kg
										L/A	L/B	H		
FEKA 1400	500	50	500 X 500 min	600 min	160	200	2" G	583	94	680	330	446	0.1	41.2
FEKA 1800	500	50	500 X 500 min	600 min	160	200	2" G	583	94	680	330	446	0.1	42.4

DAB PUMPS reserves the right to make modifications without notice.

FEKA 2000

SUBMERSIBLE PUMPS

TECHNICAL DATA

Operating range:
from 3 to 39 m^3/h with head up to 17 metres.
Pumped liquid:
loaded water, generally for use in domestic or civil sewage waste systems without grids, compatibly with the construction materials.
Free passage: 42 mm.
PH of the liquid: 6 to 11
Liquid temperature range: from 0 °C to 40 °C.
Maximum immersion depth: 20 metres (with cable of appropriate length).
Motor protection class: IP 68.
Insulation class: F.
Standard voltage: 220-240 V - 50Hz single-phase.
380-415 V - 50Hz three-phase.
Supplied with: UNI 1092 PN 6 flange
Power cable: H07RN-F, 10 metres.
Installation: fixed using a coupling device, or free in the vertical position.
Continuous duty with completely submerged pump.

APPLICATIONS

Submersible electric pump for civil and industrial drain water compatible with the pump materials. Suitable for lifting or decanting loaded cesspool water, sewage water from cesspools, meteoric water, or dirty water in general, containing solid matter with diameter up to 42 mm.

CONSTRUCTION FEATURES OF THE PUMP

ENGJL 200 cast-iron cover, motor body, hydraulic body and impeller.
Double carbon graphite/alumina mechanical seal in oil chamber.

CONSTRUCTION FEATURES OF THE MOTOR

Dry, asynchronous and waterproof motor, cooled by the surrounding liquid. Continuous S1 duty with completely submerged pump. Rotor mounted on permanently lubricated ball bearings, oversized to ensure long-term reliability and extended lifetime. In the single-phase version, the pump is supplied with capacitor housed in an external control panel with cable and shuko plug, manual reset overcurrent protection, and float for the automatic version. The automatic version is also supplied with a float.
Number of poles: 2
Max starts/hour: 20

MATERIALS

N.	PARTS*	MATERIALS
1	POWER INPUT CABLE	H07RN-F
2	UPPER COVER	EN GJL 200 CAST IRON
3	MOTOR BODY	EN GJL 200 CAST IRON
4	MOTOR SHAFT	AISI 420
5	OR	NBR
6	BEARING FLANGE	EN GJL 200 CAST IRON
7	MECHANICAL SEAL	MOTOR: CARBON GRAPHITE - ALUMINA
		PUMP: CARBON GRAPHITE - ALUMINA
8	IMPELLER	EN GJL 200 CAST IRON
9	HYDRAULIC BODY	EN GJL 200 CAST IRON

* In contact with the liquid

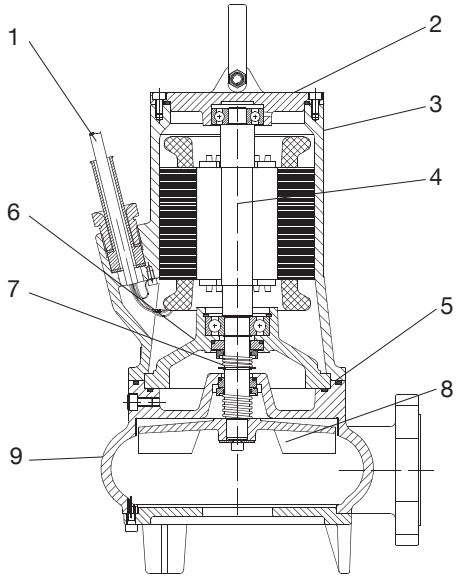

DAB PUMPS reserves the right to make modifications without notice.

PERFORMANCE RANGE

The performance curves are based on kinematic viscosity values = 1 mm²/s and density equal to 1000 kg/m³. Curve tolerance according to ISO 9906.

GRAPHIC SELECTION TABLE

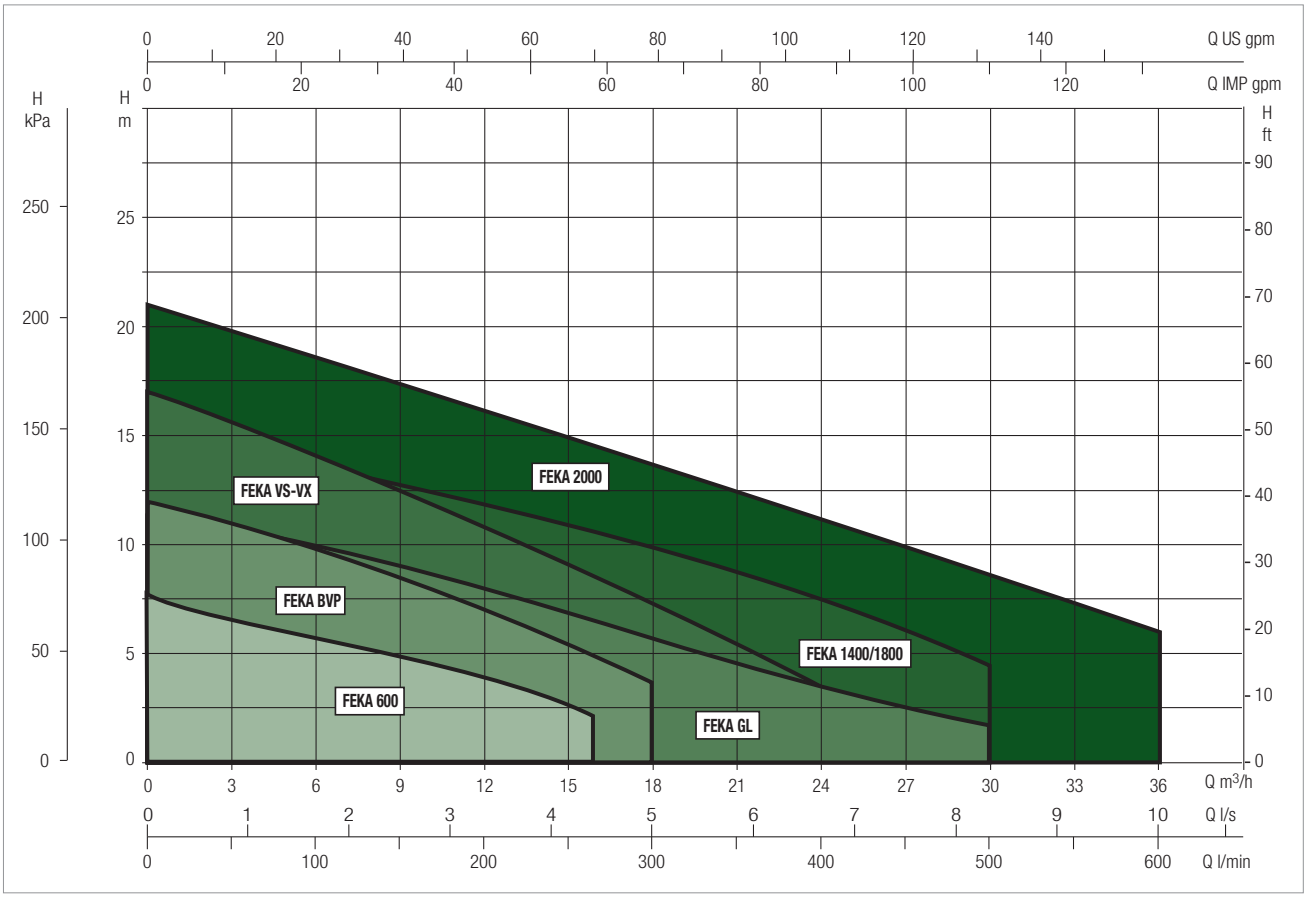

SELECTION TABLE - FEKA 2000

MODEL	Q= m³/h	0	3	6	9	12	15	18	24	30	36
	Q=l/min	0	50	100	150	200	250	300	400	500	600
FEKA 2015.2 M-T	H (m)	12.5	11.5	10.5	9.2	8	7	5.8	3.6		
FEKA 2025.2 T		17.5	16.5	15.6	14.7	13.6	12.5	11.6	9	6.5	3.8
FEKA 2030.2 T		21	19.8	18.5	17.5	16	15	13.8	11	8.3	6

FEKA 2000 - SUBMERSIBLE PUMPS FOR LIFTING WASTE WATER

Liquid temperature range: from 0 °C to +40 °C

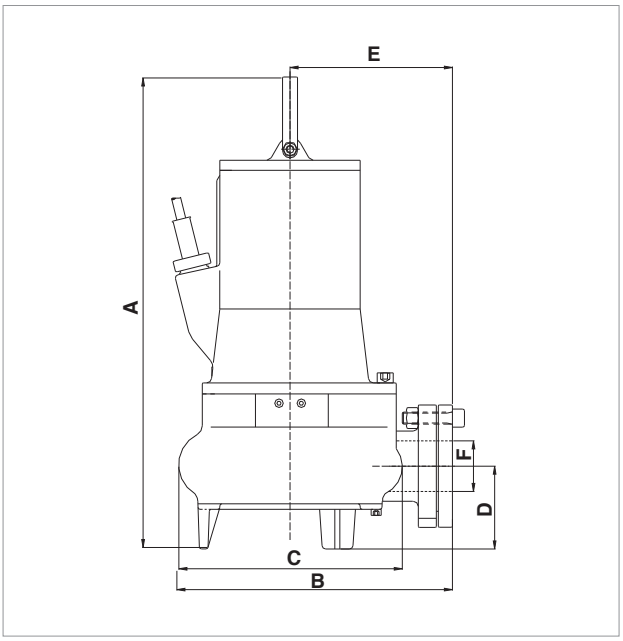

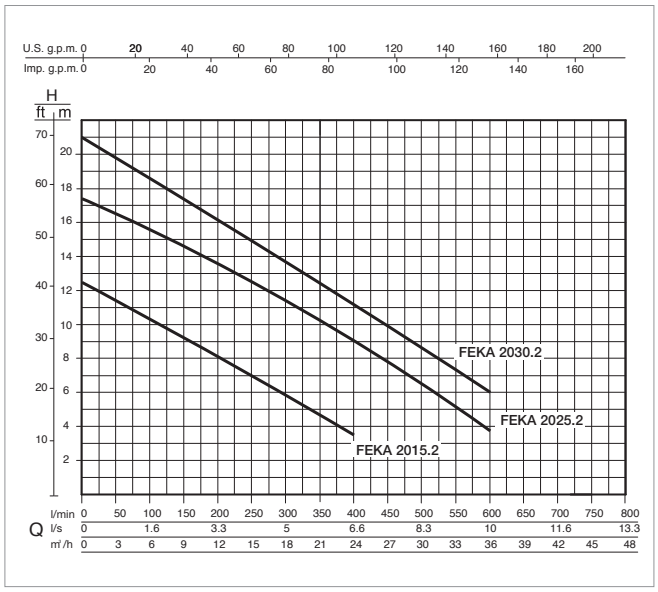

The performance curves are based on kinematic viscosity values = 1 mm^2/s and density equal to 1000 kg/m^3. Curve tolerance according to ISO 9906.

MODEL	ELECTRICAL DATA						
	POWER INPUT 50 Hz	P1 MAX kW	P2 NOMINAL		In A	CAPACITOR	
			kW	HP		µF	Vc
FEKA 2015.2 MA	1 x 230 V ~	1.6	1.1	1.5	8	30	450
FEKA 2015.2 MNA	1 x 230 V ~	1.6	1.1	1.5	8	30	450
FEKA 2015.2 TNA	3 x 400 V ~	1.5	1.1	1.5	2.8	–	–
FEKA 2025.2 TNA	3 x 400 V ~	2.2	1.8	2.4	4.1	–	–
FEKA 2030.2 TNA	3 x 400 V ~	3.3	2.2	3	5.6	–	–

MODEL	A	B	C	D	E	F Ø	DNM GAS	PACKING DIMENSIONS			VOLUME (m^3)	WEIGHT kg
								L/A	L/B	H		
FEKA 2015.2	457	300	220	88	178	2" GAS	2"	680	330	446	0.1	32
FEKA 2025.2 TNA	457	300	220	88	178	2" GAS	2"	680	330	446	0.1	33
FEKA 2030.2 TNA	457	300	220	88	178	2" GAS	2"	680	330	446	0.1	34

FIXED INSTALLATION

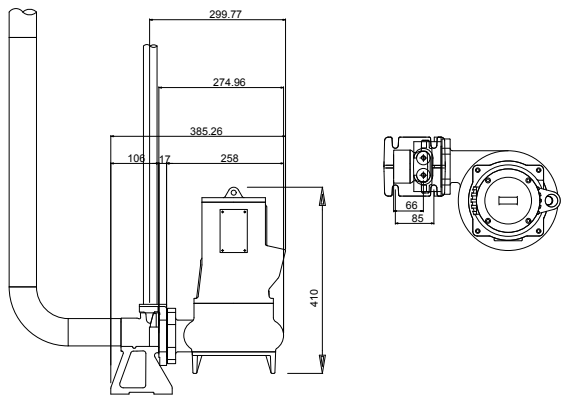

FKV

SUBMERSIBLE PUMPS FOR SEWAGE

TECHNICAL DATA

Impeller type: Vortex.
Solid handling: 65 ÷ 100 mm.
Nominal power: 1,1 ÷ 11 kW.
Outlet: DN 65 / 80 / 100.
Perfomance range: from 4.3 to 100 m3/h with 41 meters head.
Fluid: wastewater and sewage from buildings and sites in private, commercial, industrial areas.
Fluid PH: 6.5 ÷ 12.
Fluid temperature range: from 0° to +40°C.
For higher temperature please contact our sale offices.
Max installation depth: 20 mt (with a proper cable length).
Type of installation: fixed by Coupling Unit, portable in vertical position with pedestal. Continuous working with total submerged applications, or discontinuous S3 with respect of minimum levels.
Approvals: EN 12050-1 e Ex (ATEX , IECEx).

APPLICATIONS

Design for the pumping of wastewater and sewage from buildings and sites in private, commercial, industrial areas in accordance with European Standard EN 12050-1.

PUMP CONSTRUCTION

Vortex impeller with maximum solids handling with new no-clogging shape. Single-unit cartridge seal with double mechanical seals, SiC-SiC at the pump side, SiC-C at the motor side. All seals are independent of rotation direction. DN 65, DN 80, DN 100 radial slot EN 1092-1 flange discharge.
Liquid Viscosity : 1mm2/s

MOTOR CONSTRUCTION

Premium Efficiency IE3, three-phase, squirrel-cage motor. Continuously S1 rated motor in submerged applications, or discontinuous S3 according to minimum levels. Seal monitoring by a moisture sensor in the seal chamber, which signals an inspection alert if there is leakage at the mechanical seals (optional). Bi-metallic switch in stator windings, with max temperature (150°C). Start-up: 1.1 - 4.0 kW = direct on line (DOL); 5.5 - 11.0 kW = star-delta (Y/Δ). Lubricated-for-life bearings with a calculated lifetime of minimum 50,000 hrs.
Stainless steel shaft. Designed with high resistance fatigue fracture.
Degree of protection: IP 68
Insulation class: F
Max starting /hours: 20

MATERIALS

N°	PARTS	MATERIALS
1	Handle	Stainless steel (AISI 304)
2	Electric cable	07RN8-F
3	Screws	Stainless steel (AISI 304)
4	OR	NBR
5	Mechanical seal pump side	SiC/SiC
	Mechanical seal motor side	SiC/Carbon
	Ring Seal*	HNBR
6	Motor Shaft	Stainless steel (AISI 420)
7	Pump body / motor	Cast iron (EN GJL 200)
8	Impeller	Cast iron (EN GJL 250)
9	Coating	Acrylic two-component 50μm

* only from 3kW 4 poles and from 4kW 2 poles

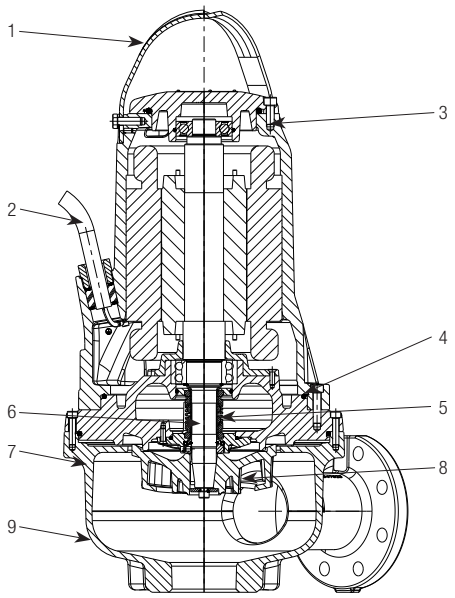

- Denomination index: (example)

		FK	C	65	22	2	T	5	230D	Ex	S

DIGITS

FK	Technical pump range name
C	Single channel impeller
V	Vortex impeller
65	Outlet diameter
80	
100	
150	
22	Approximate nominal power kW x10 (a, b, c, d in case of different curve at same power)
2	Number of poles
4	
T	Three-phase
5	Tension frequency
6	5 = 50hz - 6 = 60hz
230 D.O.L.	Tension rate & Start method
220-277 D.O.L.	
400 D.O.L.	
380-480 D.O.L.	
230 Y/D	
400 Y/D	
220-277 Y/D	
380-480 Y/D	
	No explosion proof
EX	Explosion proof (ATEX)
	No sensor version (moisture sensor)
S	Sensor version (moisture sensor) NOT for Ex version
	Cable lenght 10m
20,30,50	Specific cable lenght

STANDARD AND OPTIONS

	STANDARD	OPTIONS
MAINS VOLTAGE	3 x 400 V~	3 x 230 V~
VOLTAGE TOLERANCE	+ 6 % / -10 %, 50 Hz	-
TEMPERATURE MONITORING BY BI-METALLIC SWITCH IN THE STATOR WINDINGS	150° C	-
MECHANICAL SEAL (AT PUMP SIDE)	SiC/SiC	-
MECHANICAL SEAL (AT MOTOR SIDE)	SiC/Carbon	-
MOISTURE SENSOR	-	YES
CABLE LENGTH (M)	10	20-30-50
APPROVALS	EN 12050 -1	Ex (ATEX , IECEx)
O-RING	NBR	FKM (Viton®)
INSTALLATION	Wet well	-

FKV RANGE

SUBMERSIBLE PUMPS FOR SEWAGE

PERFORMANCE RANGE

The performance curves are based on kinematic viscosity values = 1 mm²/s and density equal to 1000 kg/m³. Curve tolerance according to ISO 9906.

GRAPHIC SELECTION TABLE

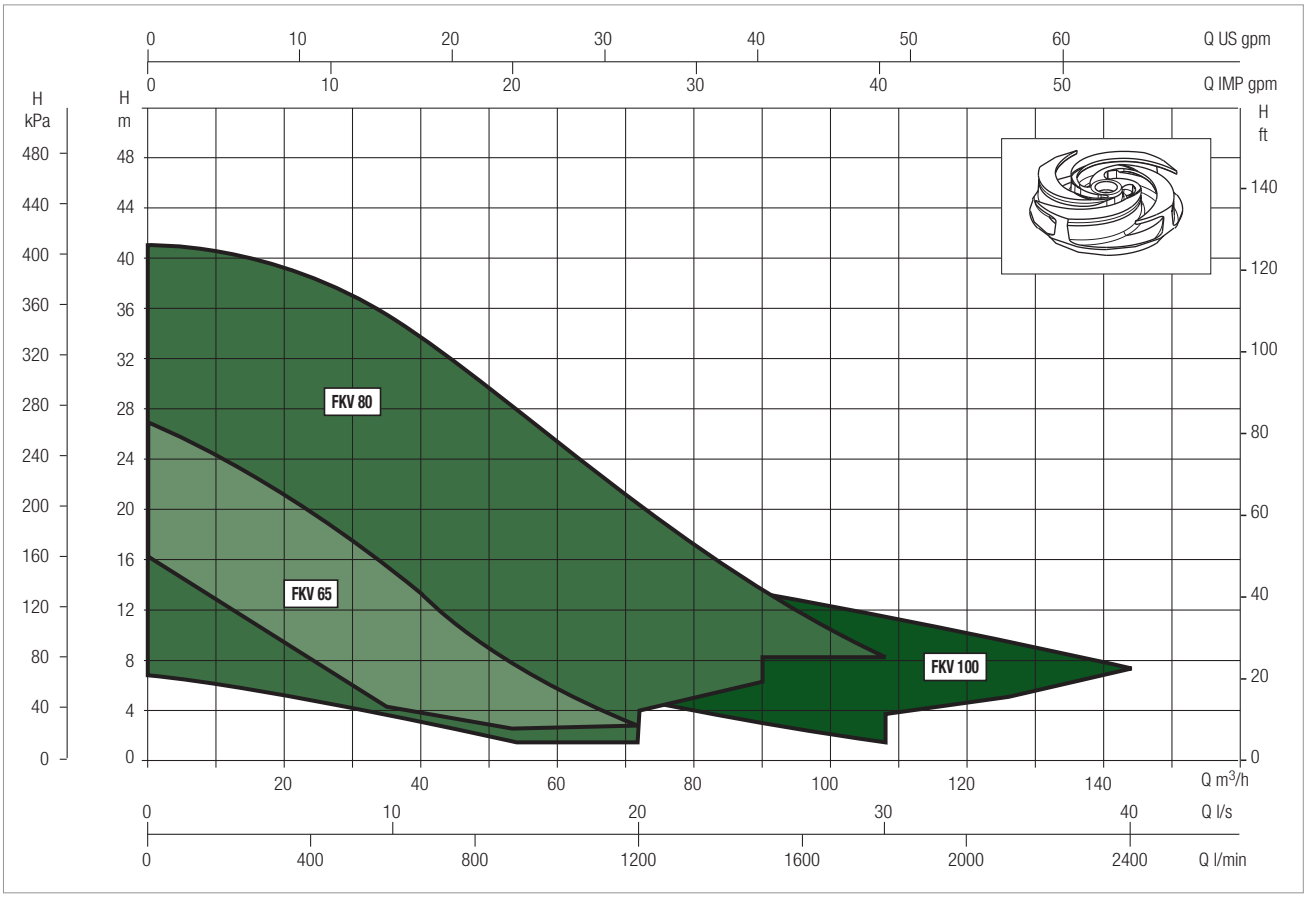

SELECTION TABLE

MODEL	Q=m³/h	0	7,2	14,4	21,6	28,8	36	43,2	50,4	57,6	64,8	72	79,2	86,4	93,6	100,8	108
	Q=l/min	0	120	240	360	480	600	720	840	960	1080	1200	1320	1440	1560	1680	1800
FKV 65 11.4 T5 400D	H (m)	9,1	8,7	7,9	6,7	5,3	4,0	2,7	1,8								
FKV 65 22.2 T5 400D		16,5	14,3	11,8	9,1	6,6	4,3	2,7									
FKV 65 30.2 T5 400D		21,1	19,5	17,1	14,2	11,1	8,1	5,4	3,4	2,3							
FKV 65 40.2 T5 400D		27,2	26,0	24,0	21,3	18,3	15,1	11,8	8,8	6,2	4,2	3,0					
FKV 80 11.4 T5 400D		7,0	6,7	6,1	5,3	4,5	3,6	2,7	1,9	1,3							
FKV 80 15.4 T5 400D		9,5	9,3	8,9	8,1	7,2	6,1	5,0	3,9	3,0	2,3	1,9					
FKV 80 22.4 T5 400D		11,8	11,6	11,3	10,8	10,0	9,1	8,0	6,9	5,8	4,7	3,7	2,8				
FKV 80 40.4 T5 400D		17,5	17,1	16,5	15,7	14,9	14,0	13,1	12,1	11,1	10,0	9,0	8,1	7,1			
FKV 80 40.2 T5 400D		22,1	21,1	19,5	17,3	14,9	12,2	9,7	7,3	5,2	3,7	2,9					
FKV 80 60.2 T5 400Y/D		29,1	28,4	27,0	25,1	22,8	20,3	17,6	14,8	12,2	9,8	7,3	5,5				
FKV 80 75.2 T5 400Y/D		32,1	31,8	30,8	29,1	27,0	24,5	21,8	18,9	16,0	13,2	10,6	8,4	6,6	5,4		
FKV 80 92.2 T5 400Y/D		36,2	35,9	35,1	33,7	31,7	29,2	26,4	23,4	20,3	17,3	14,3	11,7	9,5	7,7	6,6	
FKV 80 110.2 T5 400Y/D		41,2	41,0	40,5	39,2	37,4	35,2	32,6	29,7	26,6	23,5	20,3	17,3	14,6	12,1	10,0	8,5

MODEL	Q=m³/h	0,0	14,4	28,8	43,2	57,6	72,0	86,4	100,8	115,2	129,6	144,0
	Q=l/min	0,0	240	480	720	960	1200	1440	1680	1920	2160	2400
FKV 100 30.4 T5 400D	H (m)	11,8	10,9	9,7	8,2	6,5	4,9	3,4	2,3			
FKV 100 40.4 T5 400D		14,0	13,2	12,0	10,6	9,0	7,4	5,8	4,3	3,1		
FKV 100 55.4 T5 400Y/D		15,9	15,6	14,9	13,8	12,6	11,1	9,6	8,0	6,5	5,0	
FKV 100 75.4 T5 400Y/D		19,0	18,8	18,3	17,5	16,5	15,2	13,9	12,4	10,8	9,2	7,7

DAB PUMPS reserves the right to make modifications without notice.

FKV 65 - 2/4 POLES - SUBMERSIBLE PUMPS FOR SEWAGE

Fluid temperature range: from 0° to +40°C. For higher temperature please contact our sale offices.

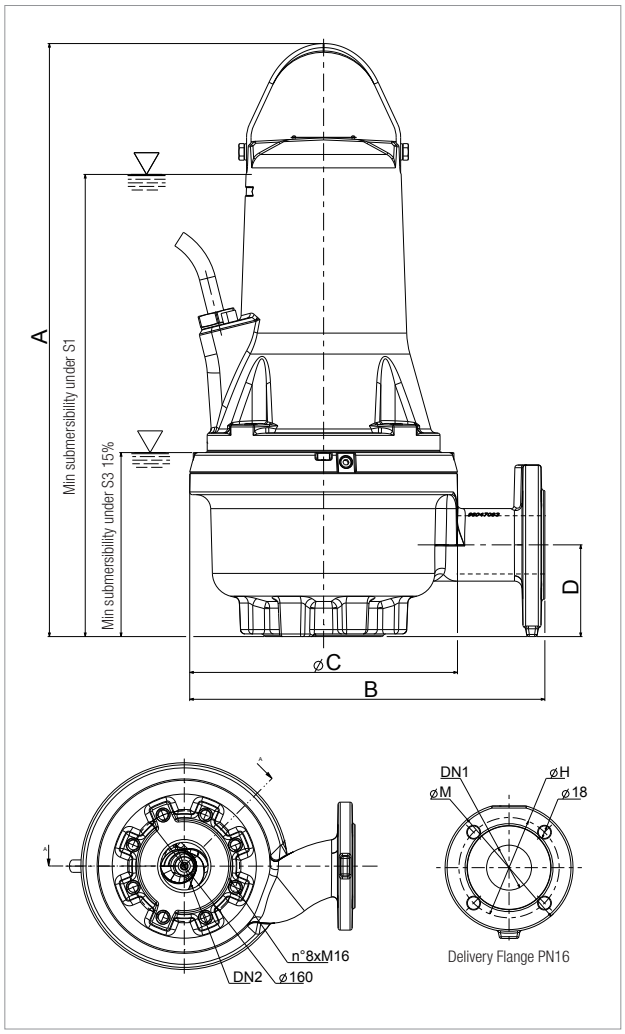

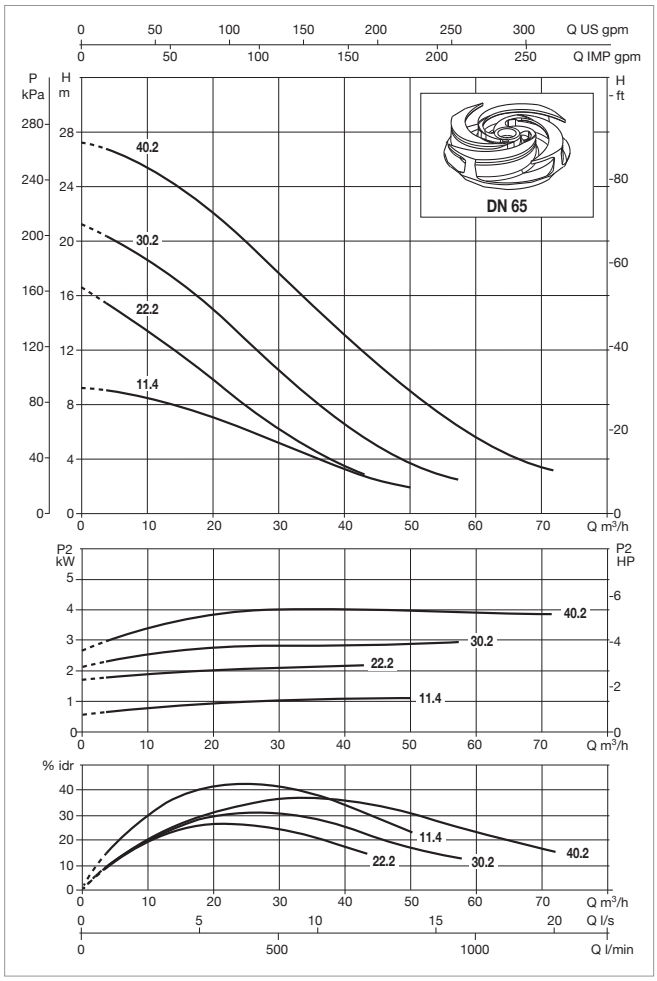

The performance curves are based on kinematic viscosity values = 1 mm²/s and density equal to 1000 kg/m³. Curve tolerance according to ISO 9906.

MODEL	ELECTRICAL DATA									
	RATED VOLTAGE 50 Hz	P1 kW	P2 NOMINAL		In A	Is A	η% MOTOR	RATED SPEED rpm/min	STARTING	CABLE
			kW	HP						
FKV 65 11.4 T5 400D	3 x 400 V~	1,3	1,1	1,5	3,3	9,9	85,0%	1450	DOL	10mt 4G1.5+3x1
FKV 65 22.2 T5 400D	3 x 400 V~	2,5	2,2	3,0	4,8	19,1	87,5%	2900	DOL	10mt 4G1.5+3x1
FKV 65 30.2 T5 400D	3 x 400 V~	3,3	3,0	4,0	5,7	19,1	87,7%	2900	DOL	10mt 4G1.5+3x1
FKV 65 40.2 T5 400D	3 x 400 V~	4,6	4,0	5,5	7,5	27,0	89,1%	2900	DOL	10mt 4G1.5+3x1

MODEL	SOLIDS HANDLING	A	B	C	D	S1	S3	DN2	FLANGE DIMENSION EN 1092-1 PN16				PACKAGING DIMENSION			WEIGHT Kg
									DN1	M	H	N° HOLES	L/A	L/B	H	
FKV 65 11.4 T5 400D	55	662	396	300	102	515	206	65	65	185	145	4	830	430	603	94
FKV 65 22.2 T5 400D	65	662	396	300	102	515	206	65	65	185	145	4	830	430	603	94
FKV 65 30.2 T5 400D	65	662	396	300	102	515	206	65	65	185	145	4	830	430	603	94
FKV 65 40.2 T5 400D	65	720	456	360	106	585	245	65	65	185	145	4	1030	530	668	143

FKV 80 - 4 POLES - SUBMERSIBLE PUMPS FOR SEWAGE

Fluid temperature range: from 0° to +40°C. For higher temperature please contact our sale offices.

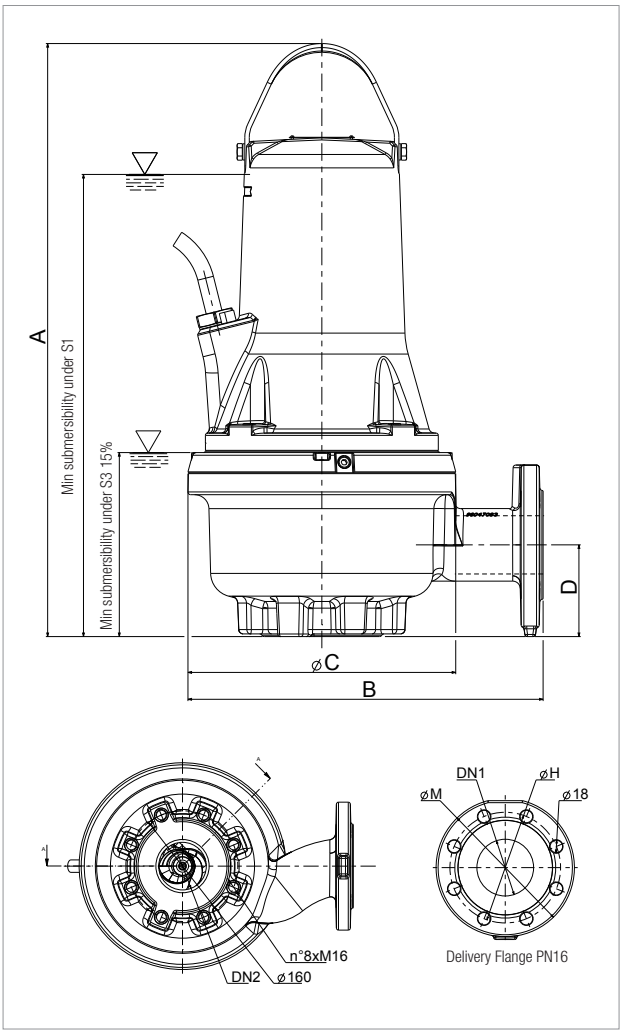

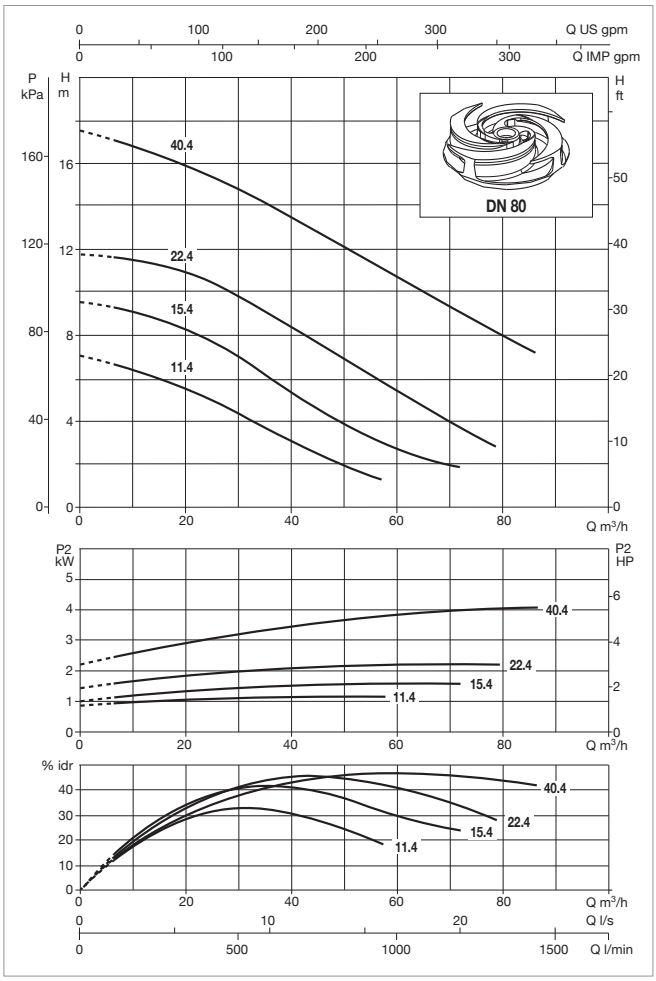

The performance curves are based on kinematic viscosity values = 1 mm²/s and density equal to 1000 kg/m³. Curve tolerance according to ISO 9906.

MODEL	ELECTRICAL DATA									
	RATED VOLTAGE 50 Hz	P1 kW	P2 NOMINAL		In A	Is A	η% MOTOR	RATED SPEED rpm/min	STARTING	CABLE
			kW	HP						
FKV 80 11.4 T5 400D	3 x 400 V~	1,3	1,1	1,5	3,5	11,4	85,2%	1450	DOL	10mt 4G1.5+3x1
FKV 80 15.4 T5 400D	3 x 400 V~	1,8	1,5	2,0	3,8	11,4	87,2%	1450	DOL	10mt 4G1.5+3x1
FKV 80 22.4 T5 400D	3 x 400 V~	2,5	2,2	3,0	4,7	11,4	87,8%	1450	DOL	10mt 4G1.5+3x1
FKV 80 40.4 T5 400D	3 x 400 V~	4,5	4,0	5,5	8,6	20,0	88,8%	1450	DOL	10mt 4G1.5+3x1

MODEL	SOLIDS HANDLING	A	B	C	D	S1	S3	DN2	FLANGE DIMENSION EN 1092-1 PN16				PACKAGING DIMENSION			WEIGHT Kg
									DN1	M	H	N° HOLES	L/A	L/B	H	
FKV 80 11.4 T5 400D	80	686	409	336	109	540	230	80	80	200	160	8	830	430	603	103
FKV 80 15.4 T5 400D	80	686	409	336	109	540	230	80	80	200	160	8	830	430	603	103
FKV 80 22.4 T5 400D	80	686	409	336	109	540	230	80	80	200	160	8	830	430	603	104
FKV 80 40.4 T5 400D	80	749	460	386	109	575	235	80	80	200	160	8	1030	530	668	172

FKV 80 - 2 POLES - SUBMERSIBLE PUMPS FOR SEWAGE

Fluid temperature range: from 0° to +40°C. For higher temperature please contact our sale offices.

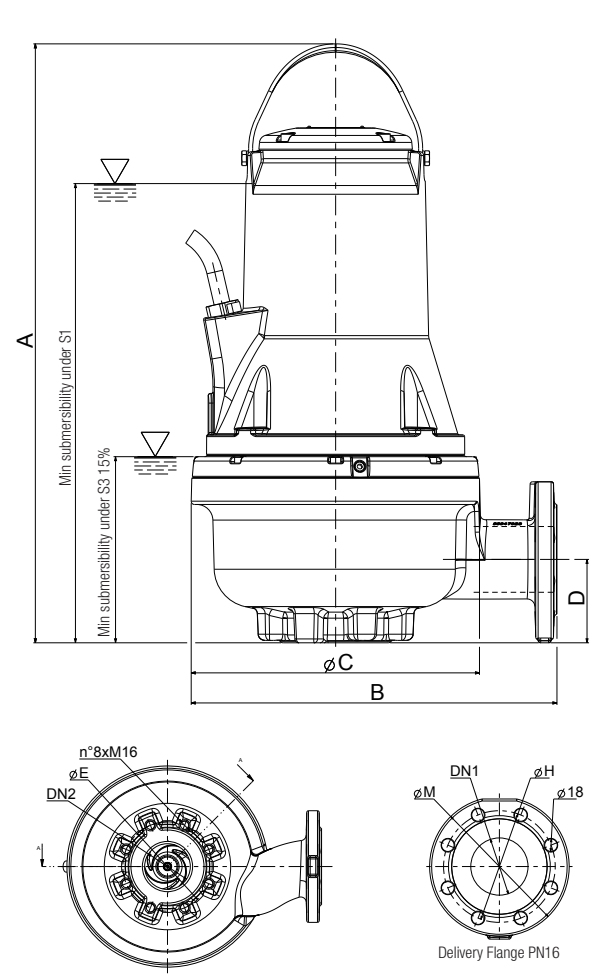

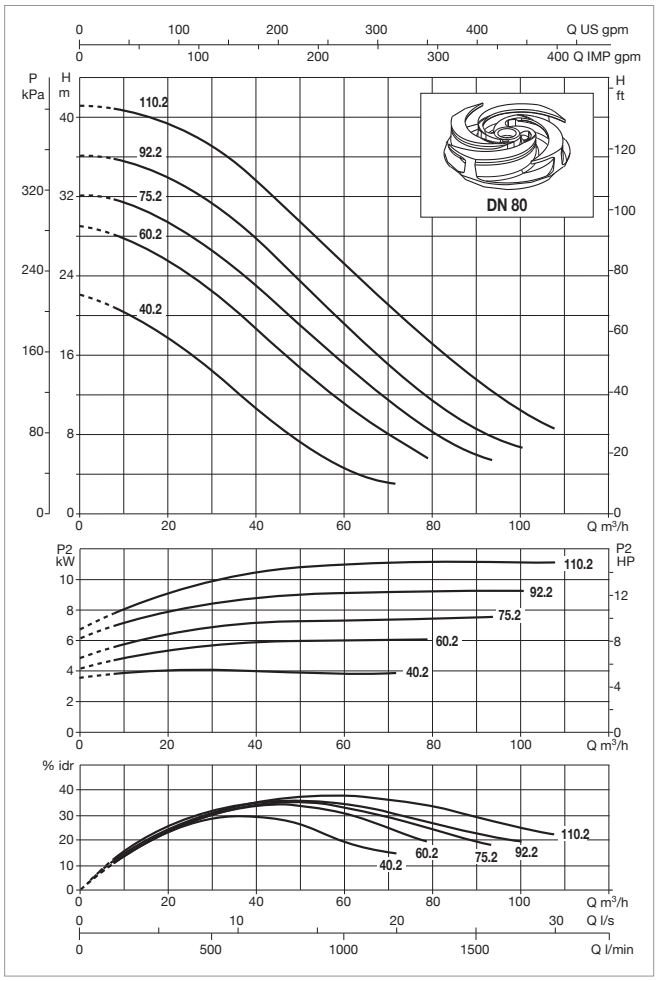

The performance curves are based on kinematic viscosity values = 1 mm²/s and density equal to 1000 kg/m³. Curve tolerance according to ISO 9906.

MODEL	ELECTRICAL DATA									
	RATED VOLTAGE 50 Hz	P1 kW	P2 NOMINAL		In A	Is A	η% MOTOR	RATED SPEED rpm/min	STARTING	CABLE
			kW	HP						
FKV 80 40.2 T5 400D	3 x 400 V~	4,6	4,0	5,5	7,7	27,0	88,2%	2900	DOL	10mt 4G1.5+3x1
FKV 80 60.2 T5 400Y/D	3 x 400 V~	6,9	6,0	8,2	11,7	43,5	88,0%	2900	Y/Δ	10mt 7G2,5+3x1
FKV 80 75.2 T5 400Y/D	3 x 400 V~	8,3	7,5	10,2	13,7	41,2	90,7%	2900	Y/Δ	10mt 7G2,5+3x1
FKV 80 92.2 T5 400Y/D	3 x 400 V~	10,2	9,2	12,5	18,0	119,0	90,8%	2900	Y/Δ	10mt 7G2,5+3x1
FKV 80 110.2 T5 400Y/D	3 x 400 V~	12,1	11,0	15,0	21,0	121,0	91,2%	2900	Y/Δ	10mt 7G2,5+3x1

MODEL	SOLIDS HANDLING	A	B	C	D	S1	S3	DN2	FLANGE DIMENSION EN 1092-1 PN16				PACKAGING DIMENSION			WEIGHT Kg
									DN1	M	H	N° HOLES	L/A	L/B	H	
FKV 80 40.2 T5 400D	80	747	456	360	104	575	235	80	80	200	160	8	1030	530	668	148
FKV 80 60.2 T5 400Y/D	80	747	456	360	104	575	235	80	80	200	160	8	1030	530	668	152
FKV 80 75.2 T5 400Y/D	80	747	456	360	104	575	235	80	80	200	160	8	1030	530	668	152
FKV 80 92.2 T5 400Y/D	80	863	488	390	123	650	240	80	80	200	160	8	1030	530	668	202
FKV 80 110.2 T5 400Y/D	80	863	488	390	123	650	240	80	80	200	160	8	1030	530	668	202

FKV 100 - 4 POLES - SUBMERSIBLE PUMPS FOR SEWAGE

Fluid temperature range: from 0° to +40°C. For higher temperature please contact our sale offices.

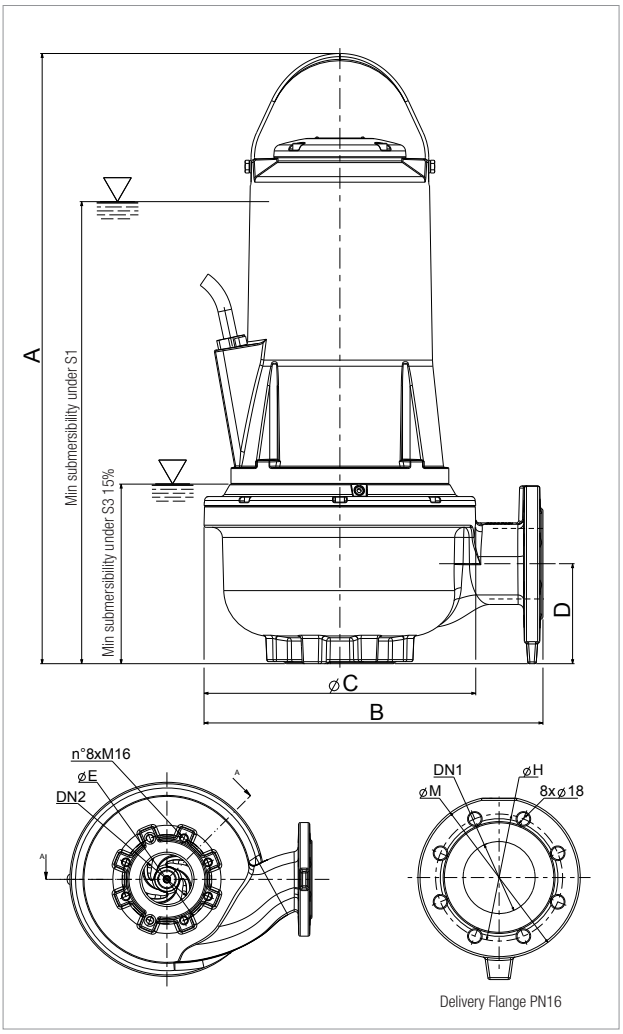

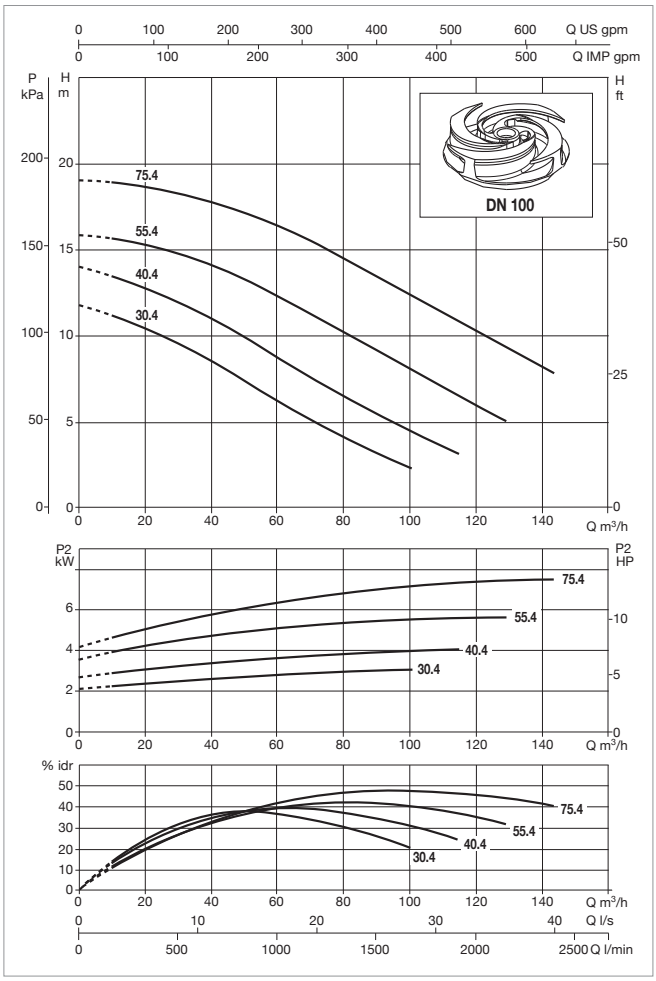

The performance curves are based on kinematic viscosity values = 1 mm²/s and density equal to 1000 kg/m³. Curve tolerance according to ISO 9906.

MODEL	ELECTRICAL DATA									
	RATED VOLTAGE 50 Hz	P1 kW	P2 NOMINAL		In A	Is A	η% MOTOR	RATED SPEED rpm/min	STARTING	CABLE
			kW	HP						
FKV 100 30.4 T5 400D	3 x 400 V~	3,5	3,0	4,0	8,0	24,7	87,8%	1450	DOL	10mt 4G1.5+3x1
FKV 100 40.4 T5 400D	3 x 400 V~	4,5	4,0	5,5	8,9	20,0	88,8%	1450	DOL	10mt 4G1.5+3x1
FKV 100 55.4 T5 400Y/D	3 x 400 V~	6,2	5,5	7,5	11,3	50,3	90,8%	1450	Y/Δ	10mt 7G2,5+3x1
FKV 100 75.4 T5 400Y/D	3 x 400 V~	8,3	7,5	10,0	14,3	44,5	90,6%	1450	Y/Δ	10mt 7G2,5+3x1

MODEL	SOLIDS HANDLING	A	B	C	D	S1	S3	DN2	FLANGE DIMENSION EN 1092-1 PN16				PACKAGING DIMENSION			WEIGHT Kg
									DN1	M	H	N° HOLES	L/A	L/B	H	
FKV 100 30.4 T5 400D	100	760	457	360	134	585	245	100	100	230	180	8	1030	530	668	166
FKV 100 40.4 T5 400D	100	760	457	360	134	585	245	100	100	230	180	8	1030	530	668	166
FKV 100 55.4 T5 400Y/D	100	883	490	390	123	670	230	100	100	230	180	8	1030	530	668	220
FKV 100 75.4 T5 400Y/D	100	883	490	390	123	670	230	100	100	230	180	8	1030	530	668	220

FKV - RINGSTAND

The Ringstand is useful for portable installation when a rapid pump positioning in the tank is needed, ensuring high stability thanks to a large contact surface.

DESCRIPTION		GENERAL FEATURES	FKV 65	FKV 80	FKV 100	PACKAGING DIMENSION			WEIGHT Kg
						L/A	L/B	H	
	RINGSTAND Ø330 FK	- EN GJL200 - Screws Stainless Steel A2 - Two Component Coating	x	x		360	360	160	10,5
	RINGSTAND Ø355 FK				x				11,4

MODEL	R1	R2	R3	R4	R5	S1	S3	FLANGE DIMENSION EN 1092-1 PN16			
								DN1	M	H	N° HOLES
FKV 65 11.4 T5 400D	790	18	128	330	280	643	334	65	185	145	4
FKV 65 22.2 T5 400D	790	18	128	330	280	643	334	65	185	145	4
FKV 65 30.2 T5 400D	790	18	128	330	280	643	334	65	185	145	4
FKV 65 40.2 T5 400D	848	18	128	330	280	713	373	65	185	145	4
FKV 80 11.4 T5 400D	814	18	128	330	280	668	358	80	200	160	8
FKV 80 15.4 T5 400D	814	18	128	330	280	668	358	80	200	160	8
FKV 80 22.4 T5 400D	814	18	128	330	280	668	358	80	200	160	8
FKV 80 40.4 T5 400D	877	18	128	330	280	703	363	80	200	160	8
FKV 80 40.2 T5 400D	875	18	128	330	280	703	363	80	200	160	8
FKV 80 60.2 T5 400Y/D	875	18	128	330	280	703	363	80	200	160	8
FKV 80 75.2 T5 400Y/D	875	18	128	330	280	703	363	80	200	160	8
FKV 80 92.2 T5 400Y/D	991	18	128	330	280	778	368	80	200	160	8
FKV 80 110.2 T5 400Y/D	991	18	128	330	280	778	368	80	200	160	8
FKV 100 30.4 T5 400D	890	19	130	355	300	715	375	100	230	180	8
FKV 100 40.4 T5 400D	890	19	130	355	300	715	375	100	230	180	8
FKV 100 55.4 T5 400Y/D	1013	19	130	355	300	800	390	100	230	180	8
FKV 100 75.4 T5 400Y/D	1013	19	130	355	300	800	390	100	230	180	8

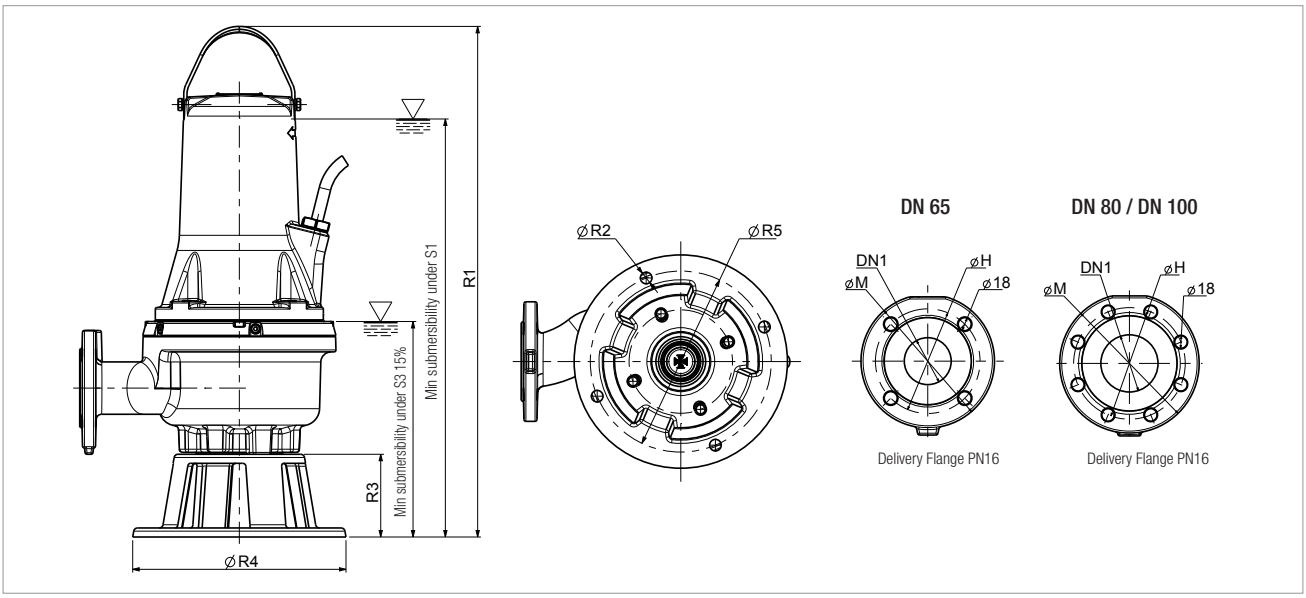

FKV - COUPLING UNIT WITH HORIZONTAL OUTLET DA-O (DN65)

The coupling unit devices for fixed installation facilitate the ascent and descent of the pump in the tank.
They come complete with all necessary components for installation with the exception of guide rails.

DESCRIPTION		GENERAL FEATURES	FKV 65	FKV 80	FKV 100	PACKAGING DIMENSION			WEIGHT Kg
						L/A	L/B	H	
	DA-065 COUPLING UNIT DN65	- EN GJL200 - Screws Stainless Steel A2 - Two Component Coating	x			160	180	240	12,5

MODEL	DN	P3	P4	P5	P6	P7	P8	P9	P10	P11	P12	P15	S1	S3
FKV 65 11.4 T5 400D	Rp 2" 1/2	100	110	44	526	532	382	402	300	730	68	171	583	274
FKV 65 22.2 T5 400D	Rp 2" 1/2	100	110	44	526	532	382	402	300	730	68	171	583	274
FKV 65 30.2 T5 400D	Rp 2" 1/2	100	110	44	526	532	382	402	300	730	68	171	583	274
FKV 65 40.2 T5 400D	Rp 2" 1/2	100	110	44	526	532	382	402	300	730	68	171	650	310

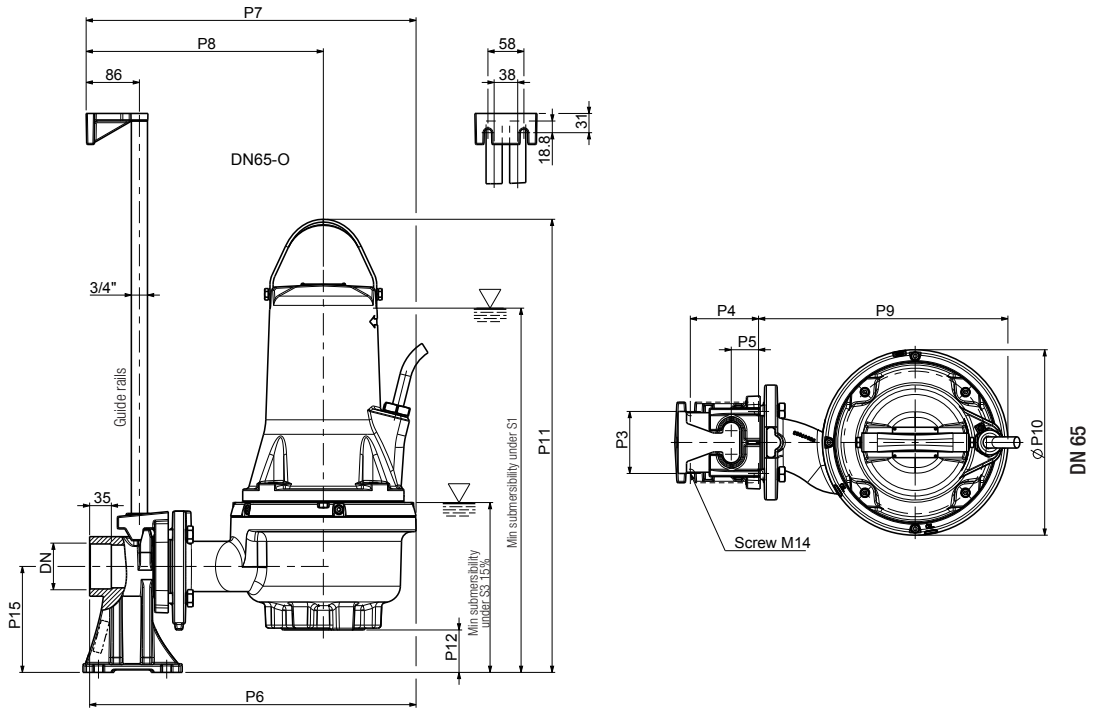

FKV - COUPLING UNIT WITH VERTICAL OUTLET DA-V (DN65 ÷ DN100)

The coupling unit devices for fixed installation facilitate the ascent and descent of the pump in the tank.
They come complete with all necessary components for installation with the exception of guide rails.

DESCRIPTION		GENERAL FEATURES	FKV 65	FKV 80	FKV 100	PACKAGING DIMENSION			WEIGHT Kg
						L/A	L/B	H	
	DA-V65 COUPLING UNIT DN65	- EN GJL200 - Screws Stainless Steel A2 - Two Component Coating - NBR Rubber Seal	x			599	399	557	25
	DA-V80 COUPLING UNIT DN80			x					31,5
	DA-V100 COUPLING UNIT DN100				x				60

MODEL	DN	P1	P2	P3	P4	P5	P6	P7	P8	P9	P10	P11	P12	P13	P14	P15	P16	P17	P18	P19	P20	P21	S1	S3
FKV 65 11.4 T5 400D	65	145	4xø18	210	140	1	730	543	394	463	300	725	63	185	175	266	81	1" 1/2	180	95	19	36	578	269
FKV 65 22.2 T5 400D	65	145	4xø18	210	140	1	730	543	394	463	300	725	63	185	175	266	81	1" 1/2	180	95	19	36	578	269
FKV 65 30.2 T5 400D	65	145	4xø18	210	140	1	730	543	394	463	300	725	63	185	175	266	81	1" 1/2	180	95	19	36	578	269
FKV 65 40.2 T5 400D	65	145	4xø18	210	140	1	790	603	423	523	360	780	60	185	175	266	81	1" 1/2	180	95	19	36	645	305
FKV 80 11.4 T5 400D	80	150+160	4xø19+8xø18	220	160	13	762	570	402	489	336	777	91	205	171	345	81	1" 1/2	180	95	19	36	631	321
FKV 80 15.4 T5 400D	80	150+160	4xø19+8xø18	220	160	13	762	570	402	489	336	777	91	205	171	345	81	1" 1/2	180	95	19	36	631	321
FKV 80 22.4 T5 400D	80	150+160	4xø19+8xø18	220	160	13	762	570	402	489	336	777	91	205	171	345	81	1" 1/2	180	95	19	36	631	321
FKV 80 40.4 T5 400D	80	150+160	4xø19+8xø18	220	160	13	813	620	427	527	386	842	91	205	209	345	81	1" 1/2	180	95	19	36	666	326
FKV 80 40.2 T5 400D	80	150+160	4xø19+8xø18	220	160	13	809	617	437	523	360	843	96	205	171	345	81	1" 1/2	180	95	19	36	671	331
FKV 80 60.2 T5 400Y/D	80	150+160	4xø19+8xø18	220	160	13	809	617	437	523	360	843	96	205	171	345	81	1" 1/2	180	95	19	36	671	331
FKV 80 75.2 T5 400Y/D	80	150+160	4xø19+8xø18	220	160	13	809	617	437	523	360	843	96	205	171	345	81	1" 1/2	180	95	19	36	671	331
FKV 80 92.2 T5 400Y/D	80	150+160	4xø19+8xø18	220	160	13	842	650	454	556	390	940	77	205	171	345	81	1" 1/2	180	95	19	36	727	317
FKV 80 110.2 T5 400Y/D	80	150+160	4xø19+8xø18	220	160	13	842	650	454	556	390	940	77	205	171	345	81	1" 1/2	180	95	19	36	727	317
FKV 100 30.4 T5 400D	100	180	8xø18	260	220	0	900	675	495	565	360	866	106	230	220	413	110	2"	200	110	20	35	691	351
FKV 100 40.4 T5 400D	100	180	8xø18	260	220	0	900	675	495	565	360	866	106	230	220	413	110	2"	200	110	20	35	691	351
FKV 100 55.4 T5 400Y/D	100	180	8xø18	260	220	0	934	708	512	597	390	979	96	230	220	413	110	2"	200	110	20	35	766	356
FKV 100 75.4 T5 400Y/D	100	180	8xø18	260	220	0	934	708	512	597	390	979	96	230	220	413	110	2"	200	110	20	35	766	356

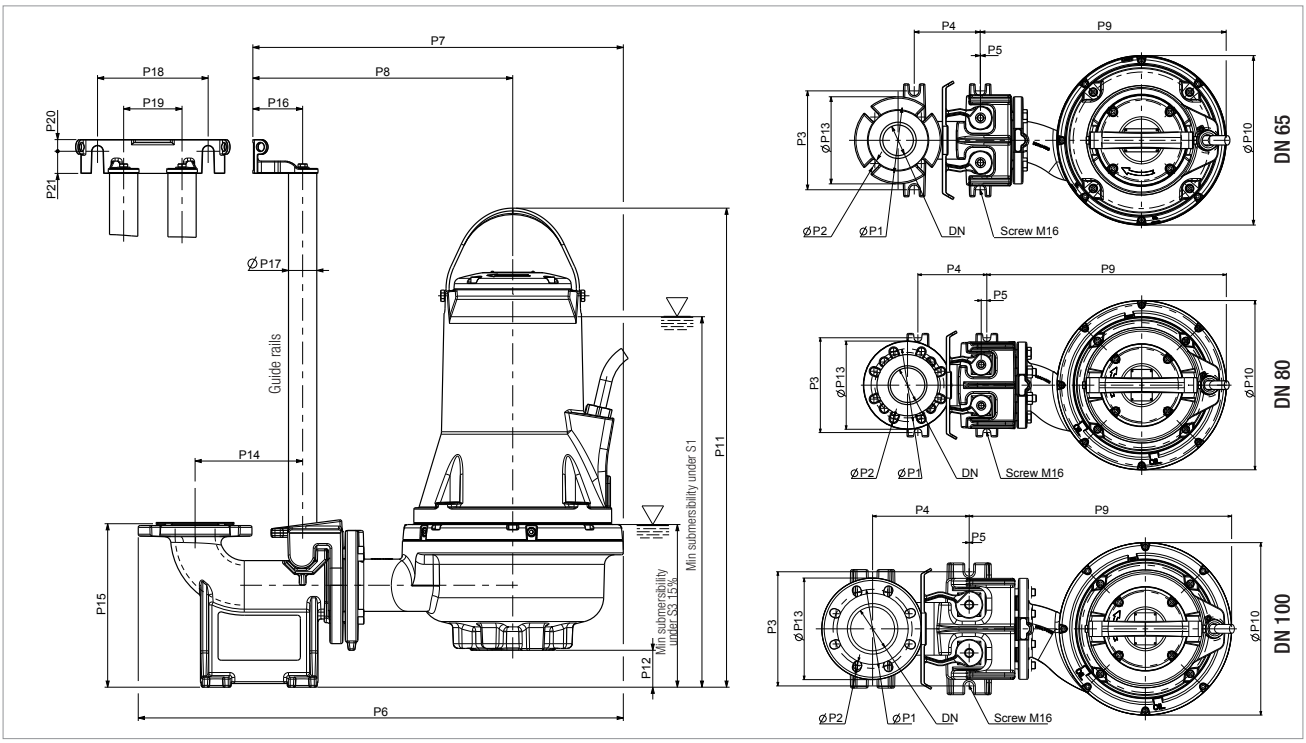

FKV - CONTROL PANEL/PUMP SELECTION MATRIX

PUMP MODEL	CODE	P1 MAX	KW	HP	In A	CONTROL PANEL ED 1 PUMP		CONTROL PANEL ED 2 PUMPS		CONTROL PANEL ED 3 PUMPS		ELECTRONIC CONTROL PANEL 2 PUMPS	
						CONTROL PANEL CODE	CONTROL PANEL MODEL	CONTROL PANEL CODE	CONTROL PANEL MODEL	CONTROL PANEL CODE	CONTROL PANEL MODEL	e.box PLUS	e.box PLUS D
FKV 65 11.4 T5 400D	60172586	1,3	1,1	1,5	3,3	108320340	ED1,5T	108320450	E2D3T	108330450	E3D4,5T	•	•
FKV 65 22.2 T5 400D	60171422	2,5	2,2	3,0	4,8	108320350	ED2,5T	108320460	E2D5T	60115082	E3D7,5T	•	•
FKV 65 30.2 T5 400D	60170389	3,3	3,0	4,0	5,7	108320350	ED2,5T	108320460	E2D5T	60115082	E3D7,5T	•	•
FKV 65 40.2 T5 400D	60171423	4,6	4,0	5,5	7,5	60170054	ED4T	60170062	E2D8T	60170069	E3D12T	•	•
FKV 80 11.4 T5 400D	60171443	1,3	1,1	1,5	3,5	108320340	ED1,5T	108320450	E2D3T	108330450	E3D4,5T	•	•
FKV 80 15.4 T5 400D	60171444	1,8	1,5	2,0	3,8	108320340	ED1,5T	108320450	E2D3T	108330450	E3D4,5T	•	•
FKV 80 22.4 T5 400D	60170418	2,5	2,2	3,0	4,7	108320350	ED2,5T	108320460	E2D5T	60115082	E3D7,5T	•	•
FKV 80 40.4 T5 400D	60171445	4,5	4,0	5,5	8,6	60170054	ED4T	60170062	E2D8T	60170069	E3D12T	•	•
FKV 80 40.2 T5 400D	60171424	4,6	4,0	5,5	7,7	60170054	ED4T	60170062	E2D8T	60170069	E3D12T	•	•
FKV 80 60.2 T5 400Y/D	60171425	6,9	6,0	8,2	11,7	108320840	ED7,5T SD	60170047	E2D15T SD	60170051	E3D22,5T SD		
FKV 80 75.2 T5 400Y/D	60170434	8,3	7,5	10,2	13,7	108320840	ED7,5T SD	60170047	E2D15T SD	60170051	E3D22,5T SD		
FKV 80 92.2 T5 400Y/D	60171426	10,2	9,2	12,5	18,0	60170075	ED15T SD	60170065	E2D30T SD	60170072	E3D45T SD		
FKV 80 110.2 T5 400Y/D	60170429	12,1	11,0	15,0	21,0	60170075	ED15T SD	60170065	E2D30T SD	60170072	E3D45T SD		
FKV 100 30.4 T5 400D	60171446	3,5	3,0	4,0	8,0	60170054	ED4T	60170062	E2D8T	60170069	E3D12T	•	•
FKV 100 40.4 T5 400D	60171447	4,5	4,0	5,5	8,9	60170054	ED4T	60170062	E2D8T	60170069	E3D12T	•	•
FKV 100 55.4 T5 400Y/D	60171448	6,2	5,5	7,5	11,3	108320840	ED7,5T SD	60170047	E2D15T SD	60170051	E3D22,5T SD		
FKV 100 75.4 T5 400Y/D	60170428	8,3	7,5	10,0	14,3	108320840	ED7,5T SD	60170047	E2D15T SD	60170051	E3D22,5T SD		

DAB PUMPS reserves the right to make modifications without notice.

FEKA 6000

SUBMERSIBLE PUMPS

TECHNICAL DATA

Type of compeller: single-channel, closed
Free passage: 95 to 108 mm.
Nominal power: 15 to 24 kW
Delivery: DN 150
Operating range:
from 36 to 420 m^3/h with head up to 24,5 metres.
Pumped liquid: loaded water, generally for use in civil or industrial sewage systems with grids, compatibly with the construction materials.
PH of the liquid: 6 to 11
Liquid temperature range: from 0° to +40 °C.
Maximum installation depth: 20 metres.
(with cable of appropriate length).
Installation: fixed using a coupling device, or free in the vertical position. Continuous duty with completely submerged pump.
Supplied with: UNI 1092 PN16 flange and base for free installation.

APPLICATIONS

Submersible electric pump for civil and industrial drain water compatible with the pump materials. Suitable for lifting or decanting loaded cesspool water, sewage water in systems with grids from cesspools, meteoric water, or dirty water in general, containing solid non-filamentous matter with diameter up to 80 mm.

CONSTRUCTION FEATURES OF THE PUMP

Single-channel impeller with rotating and fixed wear ring on the diffuser.
Flanged delivery port, EN 1092-1. DN 150 PN 16.
Double SiC/SiC mechanical seal in oil chamber on the motor side, Carbon/Steel mechanical seal on the pump side.

CONSTRUCTION FEATURES OF THE MOTOR

Dry, asynchronous and waterproof motor, cooled by the surrounding liquid. Continuous S1 duty with completely submerged pump. Rotor mounted on permanently lubricated ball bearings, oversized to ensure long-term reliability and extended lifetime. Water infiltration sensor in oil chamber, capable of indicating water infiltrations through the mechanical seal (standard). Overtemperature sensors in the motor windings, with 150 °C tripping threshold.
Standard voltage: 3x400V~. For other models contact our commercial department.
Start-up type: star-triangle (Y/Δ)
Number of poles: 4
Motor protection class: IP 68
Insulation class: F
Max starts/hour: 20

MATERIALS

N.	PARTS	MATERIALS
1	POWER INPUT CABLE	H07RN-F
2	UPPER COVER	EN GJL 200 CAST IRON
3	MOTOR BODY	EN GJL 200 CAST IRON
4	MOTOR SHAFT	AISI 420
5	OR	NBR
6	BEARING FLANGE	EN GJL 200 CAST IRON
7	MECHANICAL SEAL	MOTOR: SIC -SIC PUMP: CARBON - STEEL
8	IMPELLER	EN GJL 200 CAST IRON
9	HYDRAULIC BODY	EN GJL 200 CAST IRON

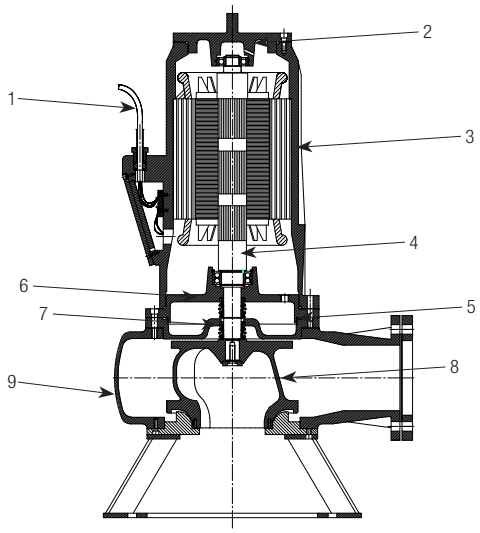

DAB PUMPS reserves the right to make modifications without notice.

FEKA RANGE

SUBMERSIBLE PUMPS

PERFORMANCE RANGE

The performance curves are based on kinematic viscosity values = 1 mm²/s and density equal to 1000 kg/m³. Curve tolerance according to ISO 9906.

GRAPHIC SELECTION TABLE

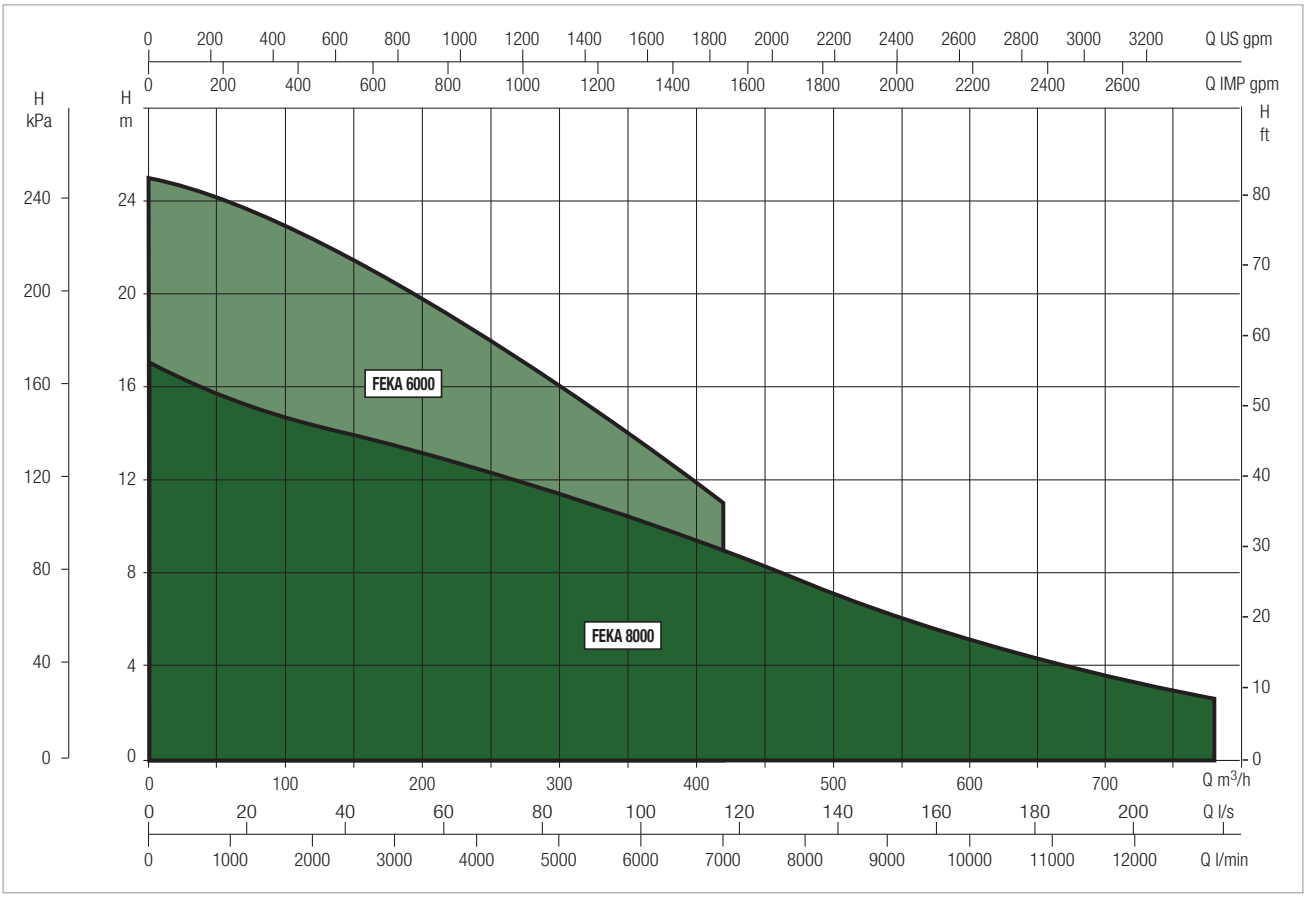

SELECTION TABLE - FEKA 6000

MODEL	Q= m³/h	0	24	36	48	60	72	90	108	126	150	180	210	240	270	300	360	420	480	600	780
	Q=l/min	0	400	600	800	1000	1200	1500	1800	2100	2500	3000	3500	4000	4500	5000	6000	7000	8000	10000	13000
FEKA 6200.4T	H (m)	21		20.3	20	19.5	18.8	18.2	17.4	16.2	15.5	14.1	12.8	11.8	10.2	8.4	4.2				
FEKA 6250.4T		25		24.5	24.2	24	23.5	23	22.5	22	21.5	20.5	19.5	18.5	17	16	14	11			

DAB PUMPS reserves the right to make modifications without notice.

FEKA 6000 - SUBMERSIBLE PUMPS FOR LIFTING WASTE WATER

Liquid temperature range: from 0 °C to +40 °C

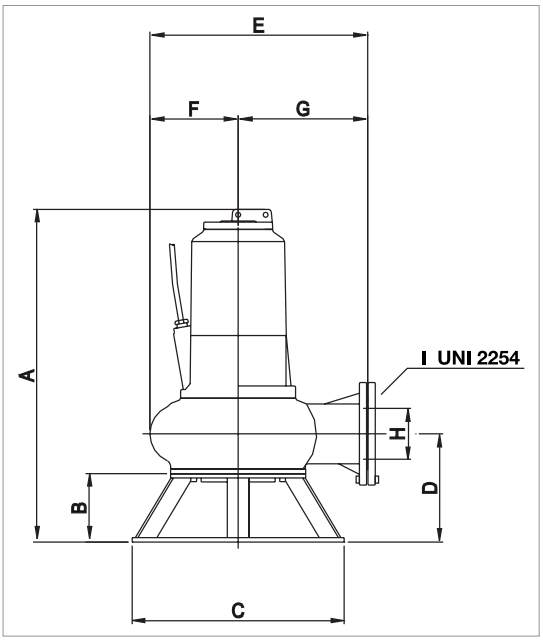

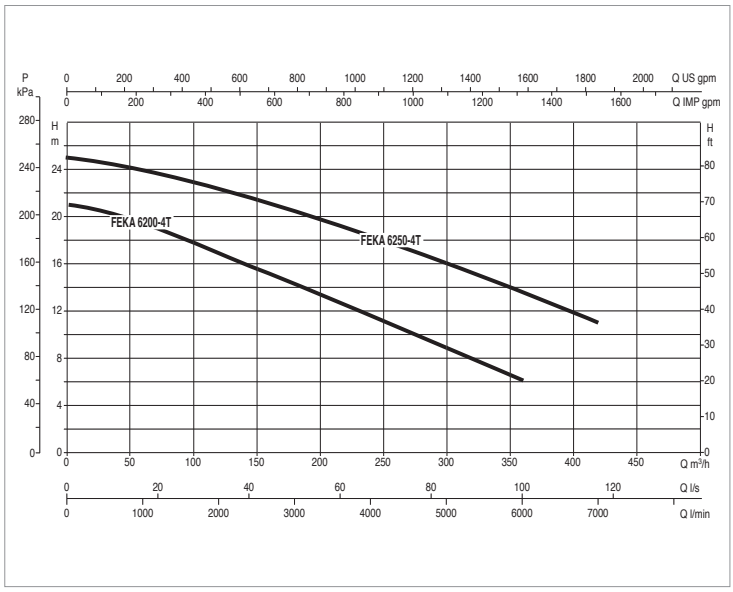

The performance curves are based on kinematic viscosity values = 1 mm^2/s and density equal to 1000 kg/m^3. Curve tolerance according to ISO 9906.

MODEL	ELECTRICAL DATA				
	POWER INPUT 50 Hz	P1 MAX kW	P2 NOMINAL		In A
			kW	HP	
FEKA 6200.4T	3X400 V~	15.8	14.9	19.9	30
FEKA 6250.4T	3X400 V~	24	18.5	24.7	40

MODEL	A	B	C	D	E	F	G	H	I	PACKAGING DIMENSION			WEIGHT kg
										L/A	L/B	H	
FEKA 6200.4T	950	190	590	301	602	240	362	150	DN150	1200	740	1500	413
FEKA 6250.4T	1150	190	590	317	657	271	386	150	DN150	1200	740	1500	400

DAB PUMPS reserves the right to make modifications without notice.

FEKA 8000

SUBMERSIBLE PUMPS

TECHNICAL DATA

Type of compeller: Three-channel, closed.
Free passage: 80 mm.
Nominal power: 8 to 19 kW.
Delivery: DN 200.
Operating range:
from 24 to 780 m^3/h with head up to 17 metres.
Pumped liquid: loaded water, generally for use in civil or industrial sewage systems with grids, compatibly with the construction materials.
PH of the liquid: 6 to 11**.**
Liquid temperature range: from 0° to +40 °C.
Maximum installation depth: 20 metres.
(with cable of appropriate length).
Installation:fixed using a coupling device, or free in the vertical position. Continuous duty with completely submerged pump.
Supplied with: UNI 1092 PN 16 flange and base for free installation.

APPLICATIONS

Submersible electric pump for civil and industrial drain water compatible with the pump materials. Suitable for lifting or decanting loaded cesspool water, sewage water in systems with grids from cesspools, meteoric water, or dirty water in general, containing solid non-filamentous matter with diameter up to 80 mm.

CONSTRUCTION FEATURES OF THE PUMP

Three-channel impeller with rotating and fixed wear ring on the diffuser.
Flanged delivery port, EN 1092-1, DN 200 PN 16.
Double SiC/SiC mechanical seal in oil chamber on the motor side, Carbon/Steel mechanical seal on the pump side.

CONSTRUCTION FEATURES OF THE MOTOR

Dry, asynchronous and waterproof motor, cooled by the surrounding liquid. Continuous S1 duty with completely submerged pump. Rotor mounted on permanently lubricated ball bearings, oversized to ensure long-term reliability and extended lifetime. Water infiltration sensor in oil chamber, capable of indicating water infiltrations through the mechanical seal (standard). Overtemperature sensors in the motor windings, with 150 °C tripping threshold.
Standard voltage: 3x400V~. For other models contact our commercial department.
Start-up type: star-triangle (Y/Δ)
Number of poles: 6
Motor protection class: IP 68
Insulation class: F
Max starts/hour: 20

MATERIALS

N.	PARTS	MATERIALS
1	POWER INPUT CABLE	H07RN-F
2	UPPER COVER	EN GJL 200 CAST IRON
3	MOTOR BODY	EN GJL 200 CAST IRON
4	MOTOR SHAFT	AISI 420
5	OR	NBR
6	BEARING FLANGE	EN GJL 200 CAST IRON
7	MECHANICAL SEAL	MOTOR: SIC -SIC PUMP: CARBON - STEEL
8	IMPELLER	EN GJL 200 CAST IRON
9	HYDRAULIC BODY	EN GJL 200 CAST IRON

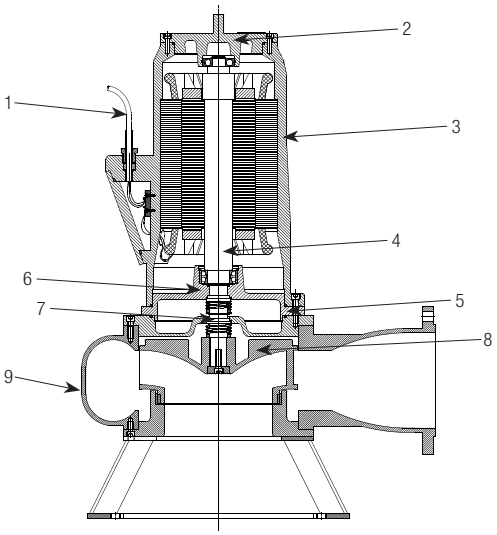

PERFORMANCE RANGE

The performance curves are based on kinematic viscosity values = 1 mm²/s and density equal to 1000 kg/m³. Curve tolerance according to ISO 9906.

GRAPHIC SELECTION TABLE

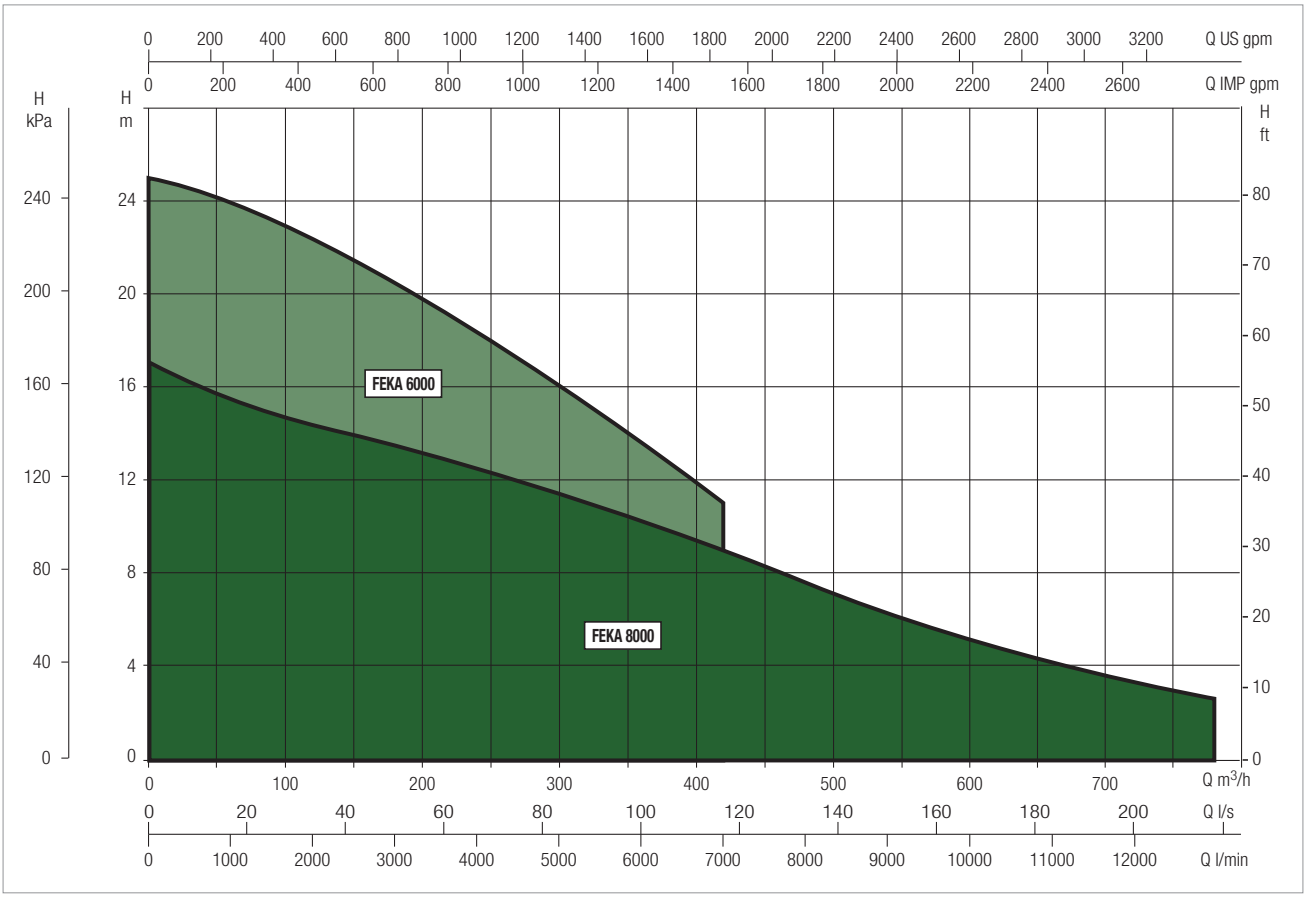

SELECTION TABLE - FEKA 8000

MODEL	Q= m³/h	0	24	36	48	60	72	90	108	126	150	180	210	240	270	300	360	420	480	600	780
	Q=l/min	0	400	600	800	1000	1200	1500	1800	2100	2500	3000	3500	4000	4500	5000	6000	7000	8000	10000	13000
FEKA 8150. 6T	H (m)	8.53	8.05	7.83	7.6	7.45	7.3	7.15	6.9	6.7	6.45	6	5.6	5.24	4.6	4.2	3.34	2.34	1.56		
FEKA 8200. 6T		11.2	18	10.5	10.3	9.97	9.7	9.5	9.2	8.8	8.46	8	7.4	6.95	6.3	5.6	4.4	3.6	2.67	1.07	
FEKA 8250. 6T		14.4	14	13.7	13.5	13.2	13	12.6	12.34	12	11.52	11.1	10.6	10	9.4	8.7	7.3	6.5	5.5	3.3	
FEKA 8300. 6T		17	16.6	16.2	16	15.6	15	14.7	14.5	14.2	13.8	13.5	13	12.4	12	11.4	10	9	7.6	5	1,8

DAB PUMPS reserves the right to make modifications without notice.

FEKA 8000 - SUBMERSIBLE PUMPS FOR LIFTING WASTE WATER

Liquid temperature range: from 0 °C to +40 °C

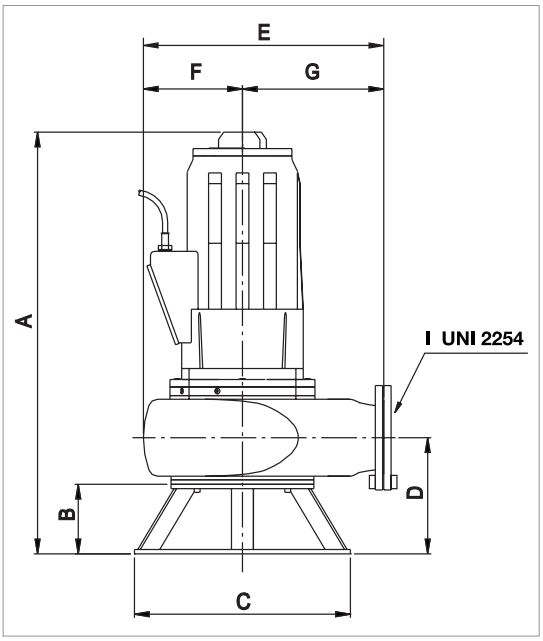

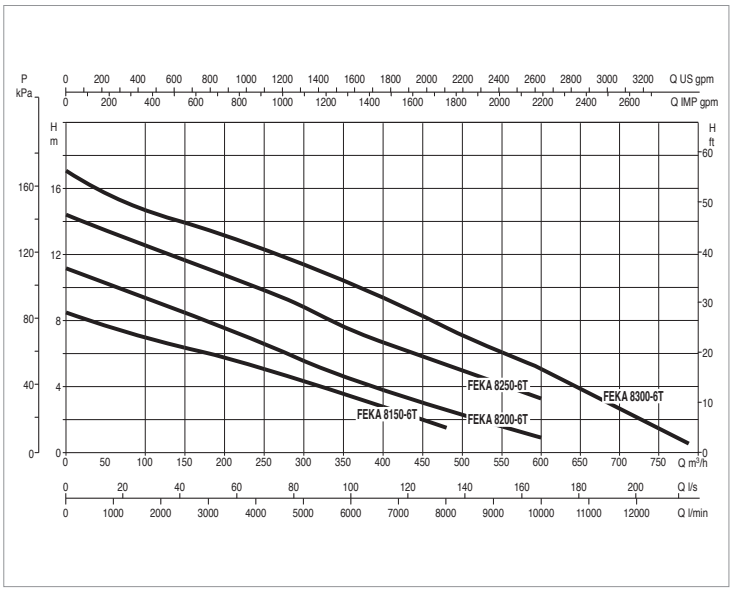

The performance curves are based on kinematic viscosity values = 1 mm²/s and density equal to 1000 kg/m³. Curve tolerance according to ISO 9906.

MODEL	ELECTRICAL DATA				
	POWER INPUT 50 Hz	P1 MAX kW	P2 NOMINAL		In A
			kW	HP	
FEKA 8150. 6T	3X400 V~	10,7	8.5	11.3	22
FEKA 8200. 6T	3X400 V~	13.4	11.4	15.2	27
FEKA 8250. 6T	3X400 V~	17	13.5	18	36
FEKA 8300. 6T	3X400 V~	22	19.3	25.7	46

MODEL	A	B	C	D	E	F	G	H	I	PACKING DIMENSIONS			WEIGHT kg
										L/A	L/B	H	
FEKA 8150. 6T	1200	190	640	317	771	271	500	200	DN200	1200	740	1500	450
FEKA 8200. 6T	1200	190	640	317	771	271	500	200	DN200	1200	740	1500	460
FEKA 8250. 6T	1200	190	640	317	771	271	500	200	DN200	1200	740	1500	465
FEKA 8300. 6T	1200	190	640	317	771	271	500	200	DN200	1200	740	1500	480

DAB PUMPS reserves the right to make modifications without notice.

SOCCORRER

EMERGENCY SYSTEMS

TECHNICAL DATA

Power input voltage: Single-phase 230 V ± 10 % 50 Hz
Output voltage: Single-phase 230 V ± 10 % 50 Hz
Output frequency: 50 Hz ± 0,005 %
Operating temperature -20° C + 60° C
Humidity ≤ 90 % without condensation
Protection class: IP 21

APPLICATIONS

SOCCORRER systems are indicated in civil and industrial installations where the powering of a single-phase 230 V electric pump is required, and the temporary power interruption could cause flooding of areas underneath the water-sewage system, which could result in damage to people and property.
The new SOCCORRER systems consist of two main sections: a metal support with wall fixing system, and the body made of self-extinguishing ABS. Their innovative design makes them suitable for installation in any environment.

FUNCTIONALITY

SOCCORRER systems are completely automatic as they are managed by high performance processor, capable of controlling:

The lack of electricity network input and the need to use the battery power.

They type of battery and the charge level.

Recharging of batteries in the shortest possible time.

Starting and stopping of the electric pumps (also with safety float)

The overcurrent protection system.

Any electric pump overloads.

The automatic reset of the electric pumps.

That the pump is not operating without water.

Manual and automatic self-tests.

A free contact for remote alarm notification.

SOCCORRER systems are available with "single output" (one electric pump) and "dual output" (two electric pumps) output. In the "dual output" version, pumps can operate simultaneously, or in alternation.

SUPPLY

SOCCORRER systems are supplied with: flood prevention controller, battery connection cables. sealed battery, battery shelf. The float is supplied separate. However, it is necessary for operation with non-automatic DAB pumps.

DAB PUMPS reserves the right to make modifications without notice.

SOCCORRER

EMERGENCY SYSTEMS

SINGLE OUTPUT SOCCORRER			1 SINGLE-PHASE PUMP OPERATION (single well), M-A and M-NA drives	2 SINGLE-PHASE PUMP OPERATION (single well), M-A drive only 2 SINGLE-PHASE PUMP OPERATION (2 separate wells), M-A drive only
MODEL	no. of BATTERIES	Max Electric pump current Amperes	PUMP MODEL (Autonomy in minutes)	PUMP MODEL (Autonomy in minutes)
SOCCORRER 500	4 x 12Ah	1.9	1 x Nova 180 (106 min.) 1 x Nova 200 (63 min.) 1 x Nova 300 (60 min.)	-
SOCCORRER 600	2 x 45 Ah	2.3	1 x Nova 180 (166 min.) 1 x Nova 200 (100 min.) 1 x Nova 300 (93 min.)	2 x Nova 180 (83 min.)
SOCCORRER 600	2 x 60 Ah	2.3	1 x Nova 180 (230 min.) 1 x Nova 200 (138 min.) 1 x Nova 300 (129 min.)	2 x Nova 180 (115 min.)
SOCCORRER 1000 PLUS	2 x 45 Ah	4.2	1 x Nova 600 (47 min.)	2 x Nova 200 (54 min.) 2 x Nova 300 (50 min.)
SOCCORRER 1000 PLUS	2 x 60 Ah	4.2	1 x Nova 600 (65 min.) 1 x Feka VS-VX 550 (49 min.)	2 x Nova 200 (73 min.) 2 x Nova 300 (66 min.)
SOCCORRER 1000 PLUS	2 x 100 Ah	4.2	1 x Nova 600 (123 min.) 1 x Feka VS-VX 550 (88 min.)	2 x Nova 200 (140 min.) 2 x Nova 300 (130 min.)
SOCCORRER 1500	4 x 60 Ah	5.7	1 x Nova 600 (121 min.) 1 x Feka 600 M (95 min.) 1 x Feka VS-VX 550 (98 min.) 1 x Feka VS-VX 750 (80 min.)	-
SOCCORRER 1500	4 x 100 Ah	5.7	1 x Nova 600 M (218 min.) 1 x Feka 600 M (172 min.) 1 x Feka VS-VX 550 (176 min.) 1 x Feka VS-VX 750 (144 min.)	-
SOCCORRER 2000	4 x 60 Ah	7.6	1 x Feka VS-VX 1000 (min. 62) 1 x Drenag 1000 (min. 68) 1 x Drenag 1200 (min. 55)	2 x Nova 600 (60 min.)
SOCCORRER 2000	4 x 100 Ah	7.6	1 x Feka VS-VX 1000 (min. 109) 1 x Drenag 1000 (min. 120) 1 x Drenag 1200 (min. 96)	2 x Nova 600 (106 min.)
SOCCORRER 2500	4 x 60 Ah	9.6	1 x Feka VS-VX 1200 (min. 47) 1 x Drenag 1400 (min. 44) 1 x Feka 1400 (min. 47)	2 x Feka 600 (min. 47) 2 x Feka VS-VX 550 (min. 48)
SOCCORRER 2500	4 x 100 Ah	9.6	1 xFeka VS-VX 1200 (min. 83) 1 x Drenag 1400 (min. 78) 1 x Feka 1400 (min. 85)	2 x Feka 600 (min. 84) 2 x Feka VS-VX 550 (min. 86)
SOCCORRER 3000	4 x 60 Ah	11.5		2 x Feka VS-VX 750 (min. 40)
SOCCORRER 3000	4 x 100 Ah	11.5		2 x Feka VS-VX 750 (min. 66)
SOCCORRER 4000	4 x 100 Ah	15.2	-	2 x Feka VS-VX 1000 (min. 60)
SOCCORRER 4000	4 x 180 Ah	15.2	1 x Feka VS-VX 1000 (min. 220) 1 x Feka VS-VX 1200 (min. 169) 1 x Drenag 1000 (min. 243) 1 x Drenag 1200 (min. 195) 1 x Drenag 1400 (min. 159) 1 xFeka 1400 (min. 172)	2 x Feka VS-VX 1000 (min. 108)
SOCCORRER 5000	4 x 100 Ah	20	-	2 x Feka VS-VX 1200 (min. 41) 2 x Drenag 1400 (min. 37) 2 x Feka 1400 (min. 42)
SOCCORRER 5000	4 x 180 Ah	20	-	2 xFeka VS-VX 1200 (min. 73) 2 x Drenag 1400 (min. 66) 2 x Feka 1400 (min. 75)

DAB PUMPS reserves the right to make modifications without notice.

SOCCORRER WITH DUAL ALTERNATE OUTPUT			2 SINGLE-PHASE PUMP ALTERNATE OPERATION (single well), M-A and M-NA drives	2 SINGLE-PHASE PUMP ALTERNATE + SIMULTA-NEOUS OPERATION (single well), M-A and M-NA drives
MODEL	no. of BATTERIES	Max Electric pump current Amperes	PUMP MODEL (Autonomy in minutes)	PUMP MODEL (Autonomy in minutes)
SOCCORRER 600	2 x 45 Ah	2.3	1 x Nova 180 (166 min.) 1 x Nova 200 (100 min.) 1 x Nova 300 (93 min.)	2 x Nova 180 (166/83 min.)
SOCCORRER 600	2 x 60 Ah	2.3	1 x Nova 180 (230 min.) 1 x Nova 200 (138 min.) 1 x Nova 300 (129 min.)	2 x Nova 180 (230/115 min.)
SOCCORRER 1000 PLUS	2 x 45 Ah	4.2	1 x Nova 600 (47 min.)	2 x Nova 200 (108/54 min.) 2 x Nova 300 (100/50 min.)
SOCCORRER 1000 PLUS	2 x 60 Ah	4.2	1 x Nova 600 (65 min.) 1 x Feka VS-VX 550 (49 min.)	2 x Nova 200 (146/73 min.) - 2 x Nova 300 (132/66 min.)
SOCCORRER 1000 PLUS	2 x 100 Ah	4.2	1 x Nova 600 (123 min.) 1 x Feka VS-VX 550 (88 min.)	2 x Nova 200 (280/140 min.) 2 x Nova 300 (260/130 min.)
SOCCORRER 1500	4 x 60 Ah	5.7	1 x Nova 600 (121 min.) 1 x Feka 600 M (95 min.) 1 x Feka VS-VX 550 (98 min.) 1 x Feka VS-VX 750 (80 min.)	-
SOCCORRER 1500	4 x 100 Ah	5.7	1 x Nova 600 M (218 min.) 1 x Feka 600 M (172 min.) 1 x Feka VS-VX 550 (176 min.) 1 x Feka VS-VX 750 (144 min.)	-
SOCCORRER 2000	4 x 60 Ah	7.6	1 x Feka VS-VX 1000 (min. 62) 1 x Drenag 1000 (min. 68) 1 x Drenag 1200 (min. 55)	2 x Nova 600 (120/60 min.)
SOCCORRER 2000	4 x 100 Ah	7.6	1 x Feka VS-VX 1000 (min. 109) 1 x Drenag 1000 (min. 120) 1 x Drenag 1200 (min. 96)	2 x Nova 600 (212/106 min.)
SOCCORRER 2500	4 x 60 Ah	9.6	1 x Feka VS-VX 1200 (min. 47) 1 x Drenag 1400 (min. 44) 1 x Feka 1400 (min. 47)	2 x Feka 600 (min. 94/47) 2 x Feka VS-VX 550 (min. 96/48)
SOCCORRER 2500	4 x 100 Ah	9.6	1 xFeka VS-VX 1200 (min. 83) 1 x Drenag 1400 (min. 78) 1 x Feka 1400 (min. 85)	2 x Feka 600 (min.168/84) 2 x Feka VS-VX 550 (min. 172/86)
SOCCORRER 3000	4 x 60 Ah	11.5		2 x Feka VS-VX 750 (min. 80/40)
SOCCORRER 3000	4 x 100 Ah	11.5	-	2 x Feka VS-VX 750 (min. 132/66)

DAB PUMPS reserves the right to make modifications without notice.

MAIN DISPLAY ITEMS

Soccorrer systems are equipped with a display and an easy to use software that shows:
the power input voltage, in V (Volts);
the power absorbed by the electric pump when connected to the electricity power network, in VA (Volt Amperes);
the battery recharge current when connected to the electricity power network, in A (Amperes);
the battery voltage, in V (Volts);
the maximum overload current, in A (Amperes);
the number of electric pump starts when connected to the electricity power network;
the number of electric pump starts using the energy from the batteries;
the time of operation of the electric pump in hours and minutes, while absorbing power from the batteries;
the total time of operation of the electric pump in hours and minutes (batteries + electricity power network);
the number of hours of operation, which can be set by the user, in order to perform the self-test (only for electric pumps with float directly connected to the system);
the serial number;
the microprocessor version.

MACHINE DETAILS

```
V1 228V P: 486VA
Vb50.9V Ib: 4.7A
```

```
MATRICOLA
1000-07-0830
```

TEST

```
TEST 1↑/2↓ ENTER
230 26.2 P 427VA
```

```
TEMPO FRA I TEST
↓↑ 44 ORE  ENTER
```

```
DURATA DEI TEST
↑↓ 12 sec. ENTER
```

LOG

```
INTERVENTI  EPS
IN RETE : 41900
```

```
INTERVENTI  EPS
SU BATT.: 06801
```

```
USCITA RETE ON
00024 h  15 min.
```

```
USCITA INV. ON
00012 h  05 min.
```

MODEL	ELECTRICAL DATA			HYDRAULIC DATA																	
	In A	P2 NOMINAL kW	P2 NOMINAL HP	Q m³/h l/min	0 0	1 16.6	2 33.3	3 50	4.5 75	5 83.3	6 100	7 116.6	7.5 125	9 150	10 166.6	12 200	15 250	18 300	24 400	30 500
NOVA 180 M-A	0.9	0.22	0.3	H (m)	4.95	4.45	3.9	3.15	1.7	1.15										
NOVA 180 M-NA	0.9	0.22	0.3		4.95	4.45	3.9	3.15	1.7	1.15										
NOVA 200 M-NA	1.5	0.22	0.3		7.1	6.6	6.1	5.6	4.9	4.7	4.2	3.7	3.5	2.8	2.35	1.5				
NOVA 300 M-A	1.6	0.22	0.3		7.18	6.7	6.23	5.8	5.2	5	4.6	4.2	4	3.42	3	2.2				
NOVA 600 M-A	3.4	0.55	0.75		10.2	9.7	9.3	8.9	8.3	8.1	7.8	7.4	7.2	6.6	6.1	5	3.1			
NOVA 600 M-NA	3.4	0.55	0.75		10.2	9.7	9.3	8.9	8.3	8.1	7.8	7.4	7.2	6.6	6.1	5	3.1			
FEKA 600 M-A	4.3	0.55	0.75		7.45	7.1	6.75	6.45	6.1	5.95	5.7	5.45	5.35	4.95	4.7	4.1	2.8			
FEKA 600 M-NA	4.3	0.55	0.75		7.45	7.1	6.75	6.45	6.1	5.95	5.7	5.45	5.35	4.95	4.7	4.1	2.8			
FEKA VS-VX 550 M-A	4.2	0.55	0.75		7.4	7.3	7.2	6.9	6.7	6.6	6.2	6.0	5.9	5.6	5.2	4.1	3.2	1.8		
FEKA VS-VX 550 M-NA	4.2	0.55	0.75		7.4	7.3	7.2	6.9	6.7	6.6	6.2	6.0	5.9	5.6	5.2	4.1	3.2	1.8		
FEKA VS-VX 750 M-A	5.13	0.75	1		9.6	9.5	9.4	9.2	9.0	8.9	8.5	8.3	8.2	7.6	7.2	6.7	5.6	4.3	1.9	
FEKA VS-VX 750 M-NA	5.13	0.75	1		9.6	9.5	9.4	9.2	9.0	8.9	8.5	8.3	8.2	7.6	7.2	6.7	5.6	4.3	1.9	
FEKA VS-VX 1000 M-A	6.63	1.00	1.36		11.8	11.7	11.6	11.3	11.1	11.0	10.5	10.3	10.2	9.8	9.4	9.0	8.0	6.8	4.1	
FEKA VS-VX 1000 M-NA	6.63	1.00	1.36		11.8	11.7	11.6	11.3	11.1	11.0	10.5	10.3	10.2	9.8	9.4	9.0	8.0	6.8	4.1	
FEKA VS-VX 1200 M-A	8.63	1.20	1.60		14	13.9	13.8	13.4	13.2	13.0	12.8	12.6	12.5	12.0	11.6	11.2	10.1	9.0	6.7	
FEKA VS-VX 1200 M-NA	8.63	1.20	1.60		14	13.9	13.8	13.4	13.2	13.0	12.8	12.6	12.5	12.0	11.6	11.2	10.1	9.0	6.7	
DRENAG 1000 M-A / M-NA	6	1	1.36		15.3			13.7	13.2	13	12.1	11.5	11.2	10.5	10	8.7	6.8	4.7		
DRENAG 1200 M-A / M-NA	7.5	1.2	1.6		17			15.4	14.7	14.5	13.8	13.4	13	12.4	11.8	10.7	9	7.3	3.3	
DRENAG 1400 M	9.2	1.1	1.5		19.2						17	16.5	16.3	15.9	15.6	14.6	13.5	12.1	9	5.5
FEKA 1400 M	8.5	1.1	1.5		13.9						12	11.6	11.4	11	10.8	9.9	8.9	7.8	5.7	3.4

SINGLE OUTPUT (1 PUMP)

The SOCCORRER KIT includes:

- Flood prevention controller preset for the connection of 1 electric pump.
- Sealed batteries*.
- Battery shelves (excluding 180 Ah batteries).
- Kit of battery connection cables.
- Instruction manual.

The pumps, the floats, and the other accessories must be ordered separately.

*** Built-in for the Soccorrer 500 model**

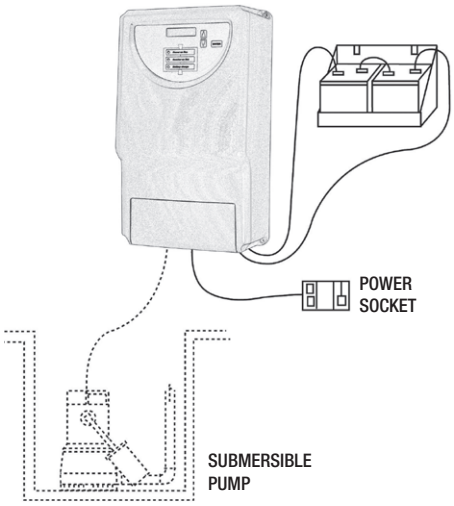

DUAL OUTPUT (2 PUMPS)

The SOCCORRER KIT includes:

- Flood prevention controller preset for the connection of 2 electric pumps.
- Sealed batteries.
- Battery shelves (excluding 180 Ah batteries).
- Kit of battery connection cables.
- Instruction manual.

The pumps, the floats, and the other accessories must be ordered separately.

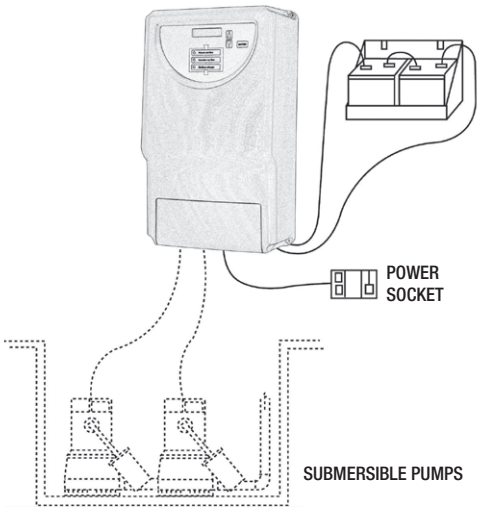

CONNECTION TO PHOTOVOLTAIC PANELS (OPTIONAL)

The photovoltaic panels for charging the batteries, for isolated use, must be connected to the input connector underneath the equipment.

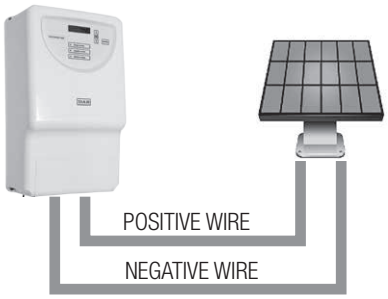

CONNECTION
E.P.S. 600
E.P.S. 1000Gold

Maximum no-load input voltage	100 V
Maximum power of panels	800 W

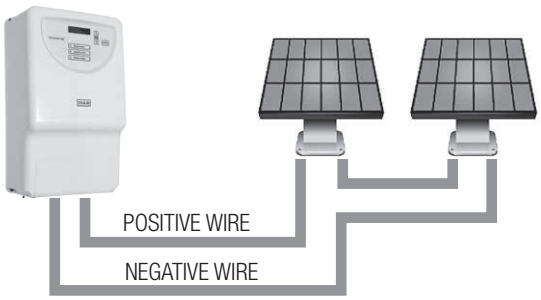

CONNECTION
E.P.S. 1500 E.P.S. 2000 E.P.S. 2500 E.P.S. 3000
E.P.S. 4000 E.P.S. 5000

Maximum no-load input voltage	100 V
Maximum power of panels	800 W

DAB PUMPS reserves the right to make modifications without notice.

SOCCORRER
EMERGENCY SYSTEMS

TECHNICAL DATA AND CONFIGURATION

TECHNICAL DATA	SOCCORRER 500	SOCCORRER 600	SOCCORRER 1000	SOCCORRER 1500	SOCCORRER 2000	SOCCORRER 2500	SOCCORRER 3000	SOCCORRER 4000	SOCCORRER 5000
Power input voltage	SINGLE-PHASE 230 V ± 10 % 50 HZ								
Output voltage	SINGLE-PHASE 230 V ± 10 % 50 HZ								
Output frequency	50 Hz ± 0,005 %								
Battery voltage	48 Vdc	24 Vdc	48 Vdc						
Limits of operation of the battery	40 Vdc	20 Vdc	40 Vdc						
Yield	97%	93%	97%						
Connection time	1 second								
Battery network switch	Automatic								
Maximum battery charger power from network	400 W								
Maximum battery charger power from photovoltaic	800 W								
Photovoltaic panel input voltage	100 Volts								
Operation	With MPPT adjustment								
Recharging time									
Consumption from network with battery charged	8/10 hours	Form power network 8/10 hours - Power network + photovoltaic (500 W) 4/5 hours - Photovoltaic only (500 W) 7/9 hours							
Maximum power delivered	500 VA	600 VA	1200 VA	1500 VA	2000 VA	2500 VA	3000 VA	4000 VA	5000 VA
Maximum current delivered	2.2 A	2.6 A	5.3 A	6.5 A	8.7 A	11 A	13 A	17.4 A	22 A
Max motor electric pump current	1.9 A	2.3 A	4.2 A	5.7 A	7.6 A	9.6 A	11.5 A	15.2 A	20 A
Maximum starting current	10 A	10 A	20 A	20 A	25 A	30 A	30 A	50 A	50 A
Operating temperature	-20 °C - 60 °C								
Humidity	≤ 90 % without condensation								
Protection class	IP 21								
Electronic protections	Overload / Short circuit / Minimum battery voltage								
Electric protections	Input fuse / battery output								
Standards	CEI EN 62040 - 1 - CEI EN 62040 - 2 - CEI EN 60204 - 1 - CEI EN 50171								

DAB PUMPS reserves the right to make modifications without notice.

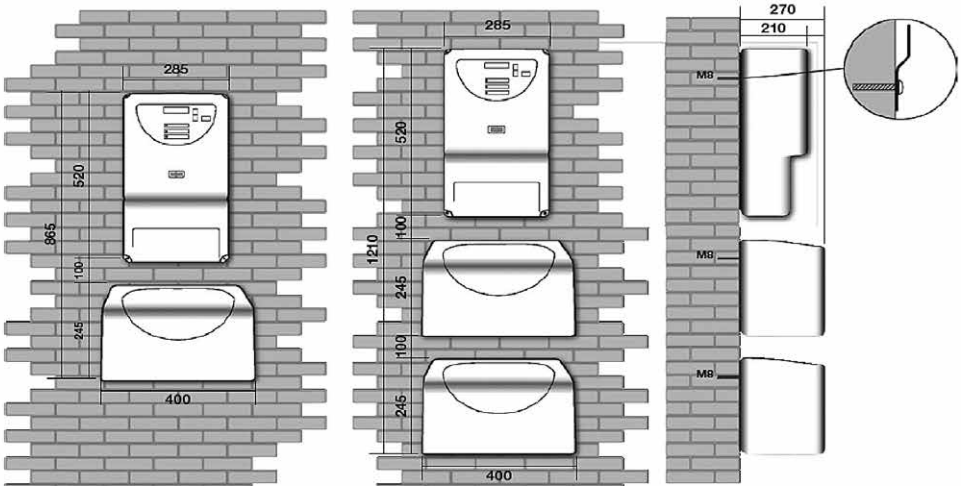

MODEL	PACKING DIMENSIONS			WEIGHT kg
	L/A	L/B	H	
SOCCORRER 500	285	210	520	32
SOCCORRER 600	285	210	520	18
SOCCORRER 1000	285	210	520	26
SOCCORRER 1500	285	210	520	30
SOCCORRER 2000	285	210	520	36
SOCCORRER 2500	285	210	520	40
SOCCORRER 3000	285	210	520	44
SOCCORRER 4000	285	210	520	46
SOCCORRER 5000	285	285	285	55

ACCESSORIES ON REQUEST TO BE ORDERED SEPARATELY

ACCESSORY TABLE		1ST FLOAT		2ND FLOAT		MDM CONTROL PANEL	SEALED BATTERY	ACOUSTIC VISUAL ALARM
						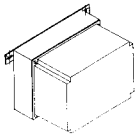		
PUMP TYPE		M-NA	M-A	M-NA	M-A	FEKA 1400M DRENAG 1400 M		
SOCCORRER	Single output	●	⊗	○	⊗	●	○	○
	Dual output (alternated)	●	⊗	○	⊗	●	○	○
	Dual output (simultaneous)	●	●	●	⊗	●	○	○

● Required ○ Safety / Optional ⊗ Not required

DAB PUMPS reserves the right to make modifications without notice.

SOCCORRER
EMERGENCY SYSTEMS

ACCESSORIES

FLOAT
5 metres.
10 metres.
15 metres.
20 metres.

CONTROL MDN
Controller for the protection and the automatic and manual operation of DRENAG 1400 M and FEKA 1400 M single-phase electric pumps. Supplied in plastic self-extinguishing box with pre-assembled bracket for wall installation. With manual reset micro circuit breaker for overload protection, automatic reset thermal protection, start-up capacitor.

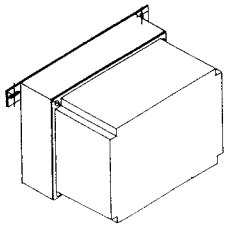

MODEL	DIMENSIONS (mm)			WEIGHT kg
	L	H	P	
CONTROL MDN	198	168	148	2.1

SEALED BATTERIES
Sealed batteries
Zero maintenance
Longer duration
Power check for visual control of the charge status
Lead/Calcium/Tin technology
Double thermally welded cover with "flame Arrest" pellet
Anti-corrosion poles
Case bottom with "Frex Ribs" for vibration absorption
Nominal voltage 12 VDC
Average battery life 4/5 years.

MODEL	DIMENSIONS (mm)			WEIGHT kg
	L	H	P	
SEALED 60AH BATTERY	242	190	175	14.4
SEALED 90AH BATTERY	352	190	175	23.3

ACOUSTIC AND VISUAL ALARM
Flashing siren, powered by the batteries of the flooding prevention system, complete with activation float.

NOVAIR

SUBMERGED AERATOR

TECHNICAL DATA

Operating range: air capacity 2 to 17 m^3/h for depths from 20 to 90 cm from the axis of the suction port.
Protection class: IP68.
Insulation class: F.
Pumped liquid operating range: from 0 °C to 35 °C according to EN 60335-2-41 for domestic use.
Minimum immersion depth: 20 cm.
Maximum immersion depth: 80 cm (Novair 200) 90 cm (Novair 600).
Immersion liquid: Cesspool sewage water without solid matter and fibre, clean water.
Standard voltage: single-phase: 220 – 240 V/ 50 Hz.
Power cable: H07RNF8-F, 2 m, 5 m and 10 m, with the possibility of SCHUKO plug.
Installation: Vertical.

APPLICATIONS

The submerged aerator has been designed for the aeration of sewage in small purification systems. Further uses can be the oxygenation of garden ponds, and fresh water fish farms.

CONSTRUCTION FEATURES

Technopolymer pump body, wiring cover, and impellers. Two-pole asynchronous submersible 0,18 and 0,4 kW motor with built-in thermal protection and permanent capacitor in the wiring compartment.
Steel motor shaft with ceramic treated bushing, on oversized and permanently lubricated ball bearings. Threefold seal with interposed rings with oil pre-chamber.

MATERIALS

N.	PARTS*		MATERIALS
1	PUMP BODY		TECHNOPOLYMER
2	IMPELLER		TECHNOPOLYMER
3	OR RING		NBR 70
4	MOTOR	MOTOR CASING	AISI 304
		SHAFT	AISI 416
5	CERAMIC TREATED BUSHING		AISI 303 + CERAMIC
6	RADIAL SEAL		NBR 70
7	V-RING		NBR 70 + GREASE

* In contact with the liquid

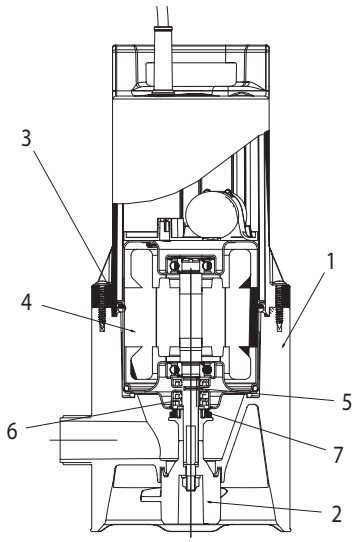

NOVAIR - SUBMERGED AERATOR FOR SMALL PURIFICATION SYSTEMS

Liquid temperature range: from 0 °C to 35 °C according to EN 60335-2-41 for domestic use.

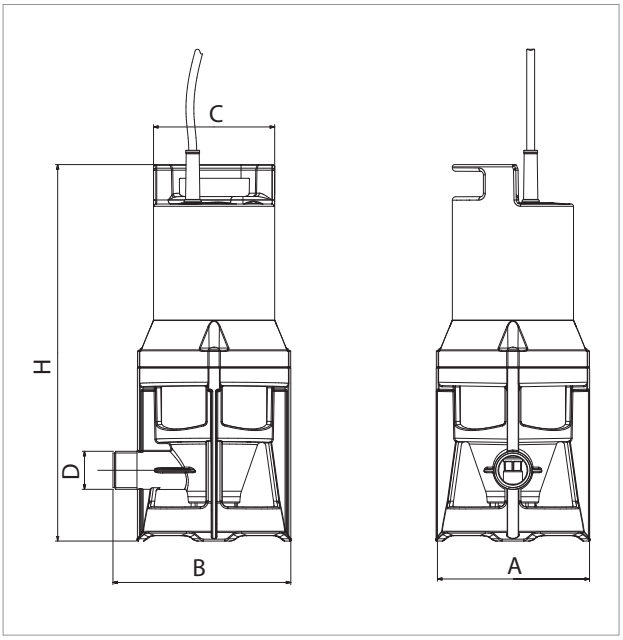

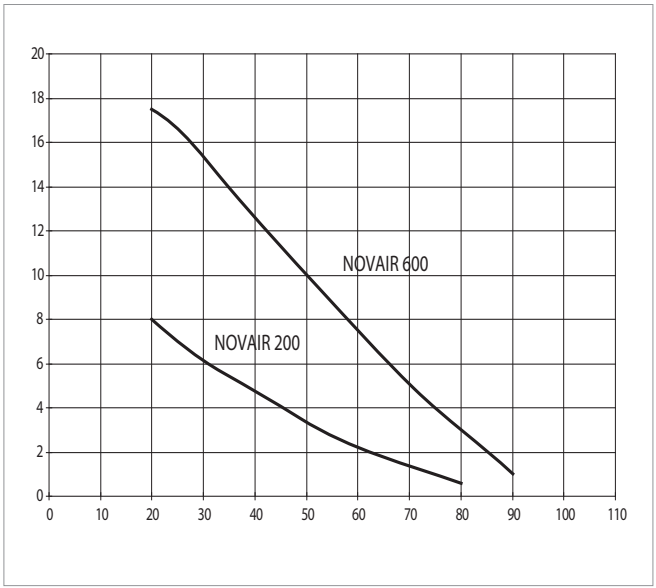

The performance curves are based on kinematic viscosity values = 1 mm^2/s and density equal to 1000 kg/m^3. Curve tolerance according to ISO 9906.

MODEL	ELECTRICAL DATA					MAXIMUM AIR RATE m^3/h
	POWER INPUT 50 Hz	P1 MAX kW	P2 NOMINAL		In A	
			kW	HP		
NOVAIR 200 M-NA	1X220- 240 V~	0.28	0.18	0.24	1.4	8
NOVAIR 600 M-NA	1X220- 240 V~	0.63	0.40	0.54	3	17.5

MODEL	H	A	B	Ø C	D G NPT	PACKING DIMENSIONS			CABLE	VOLUME (m^3)	WEIGHT kg
						L/A	L/B	H			
NOVAIR 200	329.5	130.5	158	106	1"	190	255	308	2 m / H07RN8-F 5 mt / H07RN8-F 10 mt / H07RN8-F	0.015	3.5
NOVAIR 600	380.2	130.5	158	106	1" ¼	190	255	419	2 m / H07RN8-F 5 mt / H07RN8-F 10 mt / H07RN8-F	0.015	5.4

DAB PUMPS reserves the right to make modifications without notice.

GENIX

AUTOMATIC COLLECTION AND LIFTING STATIONS

TECHNICAL DATA

Liquid temperature range:
from 0 °C to +50 °C.
Pumped liquid:
waste water according to EN 12050-3.
Third party approval: VDE-GS, LGA, VDE-EMC.
Capacity: approved for 6 and 9 litre flushing units according to EN 12050-3.
Protection class: IP44.

APPLICATIONS

Its use is necessary when toilet, shower, sink, or bidet waste water cannot be expelled due to gravity. These lifting stations can be used anywhere for the addition of a toilet, for new installations, refurbishments, or structural modifications. With the 110 model, in addition to a toilet, a further user can also be connected, like the sink. With the 130 model, in addition to the toilet, three further users can be connected, like the sink, the shower, and the bidet. A characteristic of the proposed models is their silent operation, further improved in the Comfort versions. The powerful and reliable pump, and the nickel plated stainless steel grinder, make the product durable, with practically no regular maintenance required. Extremely easy to repair in case of blocking, with the possibility of removing the motor assembly by simply removing two screws. The discharge tap ensures clean and problem-free maintenance. The check valves are built in the delivery connections, and in the side connections for 130 models. Available as extra accessories are an acoustic flooding prevention alarm, and an extension pipe, for adapting GENIX to pre-existing installations.

CONSTRUCTION FEATURES OF THE PUMP

30 % barium loaded polypropylene tank. For the sound proofed version, 70 % barium loaded polypropylene sound proofer. 30 % fibre glass PPO impeller.
Stainless steel motor shaft.
Nickel plated stainless steel grinder.

CONSTRUCTION FEATURES OF THE MOTOR

Asynchronous, made of stainless steel. Stainless steel shaft and cover.
Thermal overheating protection.
Wear-resistant motor shaft.

MATERIALS

N.	PARTS		MATERIALS
1	TANK		PP 15% BARIUM
2	SOUND PROOFER		PP 70% BARIUM
3	PIPE		EPDM
4	GENIX COMFORT FLANGE GROUP V230-50Hz	MOTOR-COVER	AISI 304
		MOTOR-SHAFT	AISI 416
		IMPELLER	30 % FIBRE GLASS PPO
		FIXED GRINDER	AISI 304
		IMPELLER NUT	30 % FIBRE GLASS PPO
		MOVING GRINDER	AISI 420
		MOTOR FLANGE	30 % FIBRE GLASS PP
		PUMP BODY	30 % FIBRE GLASS PP
		CENTERING RING	30 % FIBRE GLASS PP
		VOLUTE	30 % FIBRE GLASS PP
5	VALVE ASSEMBLY	CHECK VALVE BODY	30 % FIBRE GLASS PP
		OVAL CLAPET VALVE	EPDM
		OR -3118 29.82 X 2.62	NBR
6	DELIVERY PIPE		30 % FIBRE GLASS PP

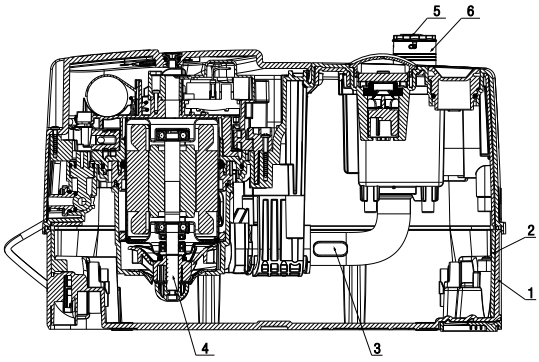

INSTALLATION INSTRUCTIONS

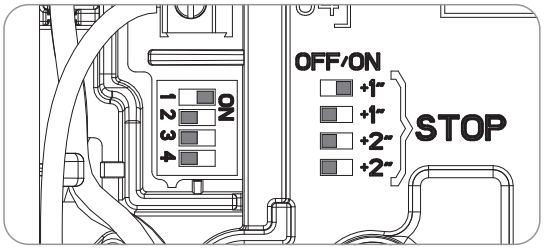

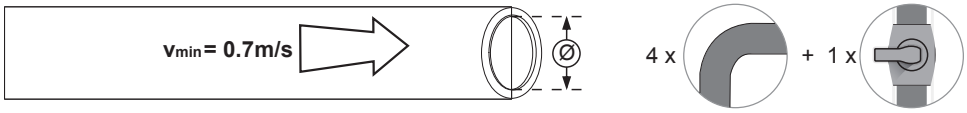

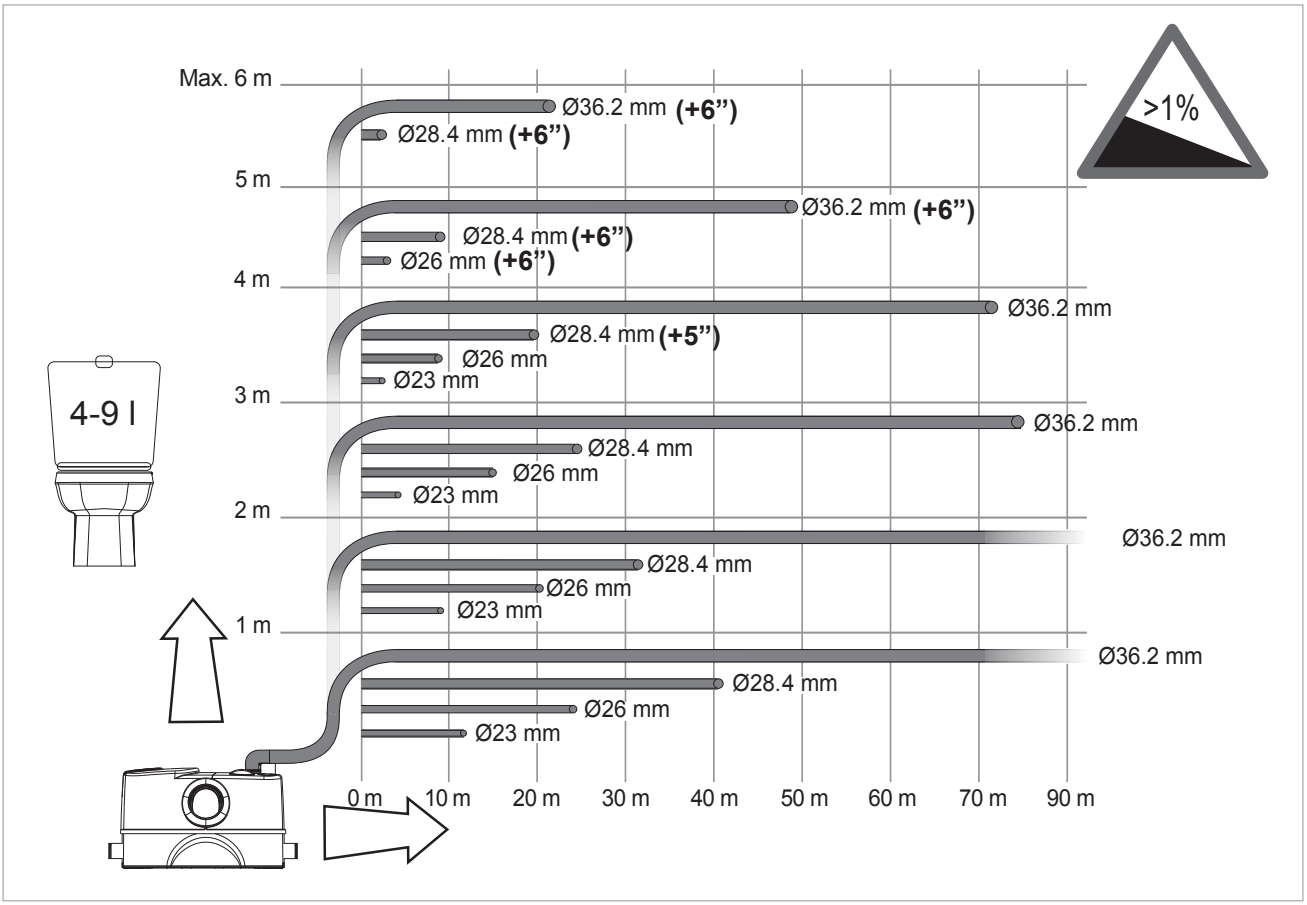

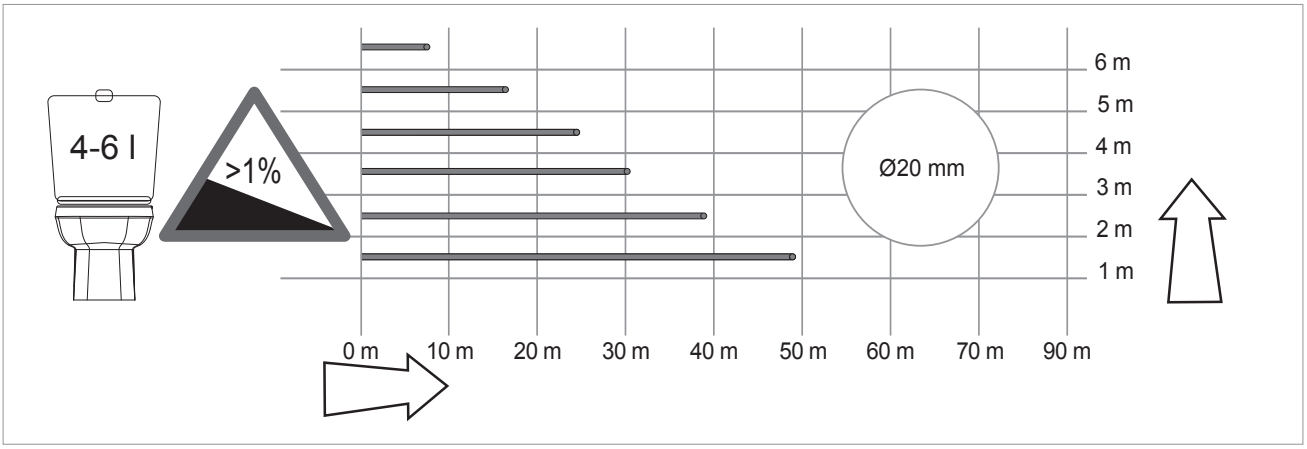

GENIX - WASTE WATER DRAINING

Liquid temperature range: from 0 °C to +50 °C

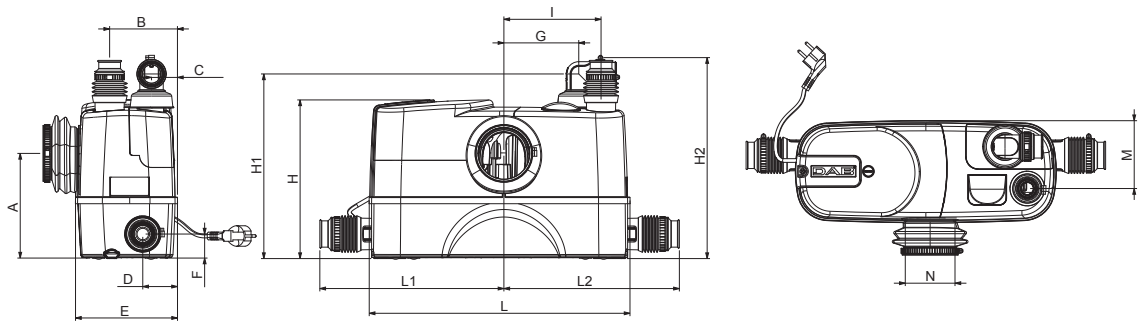

MODEL	ELECTRICAL DATA				
	POWER INPUT 50 Hz	P1 MAX kW	P2 NOMINAL		In A
			kW	HP	
GENIX 110	1 x 230 V ~	490	0.32	0.44	2.3
GENIX 130	1 x 230 V ~	490	0.32	0.44	2.3
GENIX COMFORT 110	1 x 230 V ~	490	0.32	0.44	2.3
GENIX COMFORT 130	1 x 230 V ~	490	0.32	0.44	2.3

MODEL	A	B	C	D	E	F	G	H	H1	H2	I	L	L1	L2	M	N	PACKING DIMENSIONS			VOLUME (m^3)	WEIGHT kg
																	L/A	L/B	H		
GENIX 110	183	118	45	60	178	42	178	277	323	351	170	456	322	307	118	87	538	227	426	0.0520	10.3
GENIX 130	183	118	45	60	178	42	178	277	323	351	170	456	322	307	118	87	538	227	426	0.0520	10.6
GENIX COMFORT 110	183	118	45	60	178	42	178	277	323	351	170	456	322	307	118	87	538	227	426	0.0520	11.5
GENIX COMFORT 130	183	118	45	60	178	42	178	277	323	351	170	456	322	307	118	87	538	227	426	0.0520	12

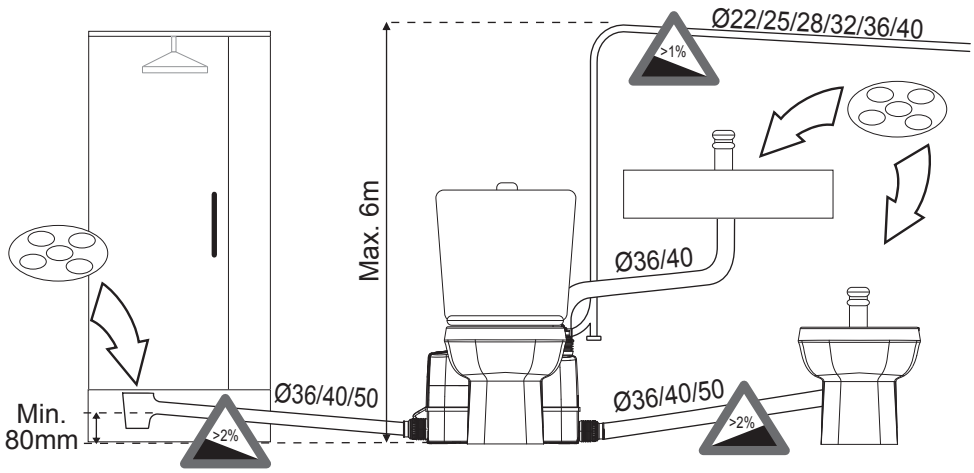

NOVABOX

AUTOMATIC COLLECTION AND LIFTING STATIONS

TECHNICAL DATA

Operating range:
from 1 to 7,2 m^3/h with head up to 6,9 metres.
Liquid temperature range:
+ 50 °C.
+ 90 °C for a maximum time of 3 minutes.
Pumped liquid:
waste water without solid and/or fibrous matter.
Protection class of the motor and the pump: IP 68.
Motor isolation rating: F.

APPLICATIONS

Stations for the collection and lifting of domestic waste water from the bath, sink, shower, and washing machine in basements, or below the sewer network in general. They consist of a NOVA 300 pump with 5 metre power input cable and plug fitted on a technopolymer plate, 30 litre technopolymer tank, check valve on the delivery. The lifting station is supplied with pump with connection kit and shower float kit.

MATERIALS

N.	PARTS	MATERIALS
1	TANK	TECHNOPOLYMER
2	NIPPLE	TECHNOPOLYMER
3	RUBBER HOLDER	TECHNOPOLYMER
4	PIPE	RUBBER
5	OR RING	EPDM
6	NON-RETURN VALVE	TECHNOPOLYMER
7	RUBBER HOLDER	TECHNOPOLYMER

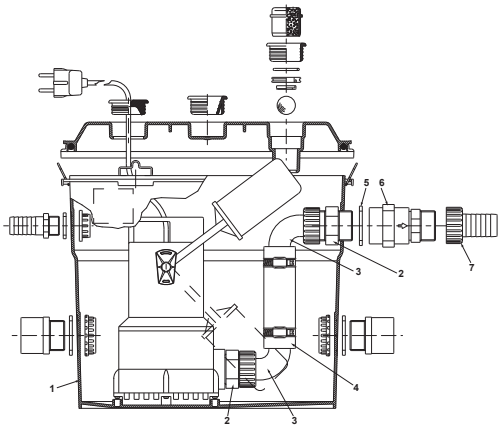

NOVABOX - AUTOMATIC WASTE WATER DRAINING COLLECTION AND LIFTING STATIONS

Liquid temperature range: from +50 °C to +90 °C for a maximum time of 3 minutes

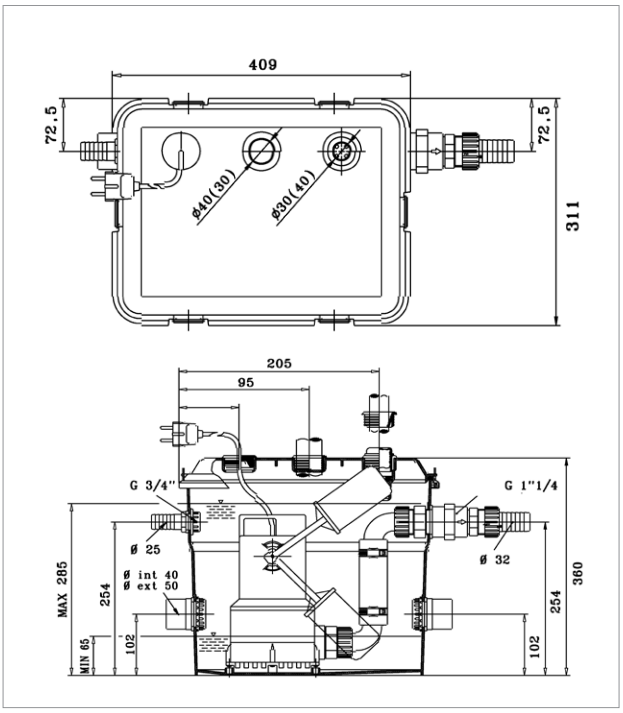

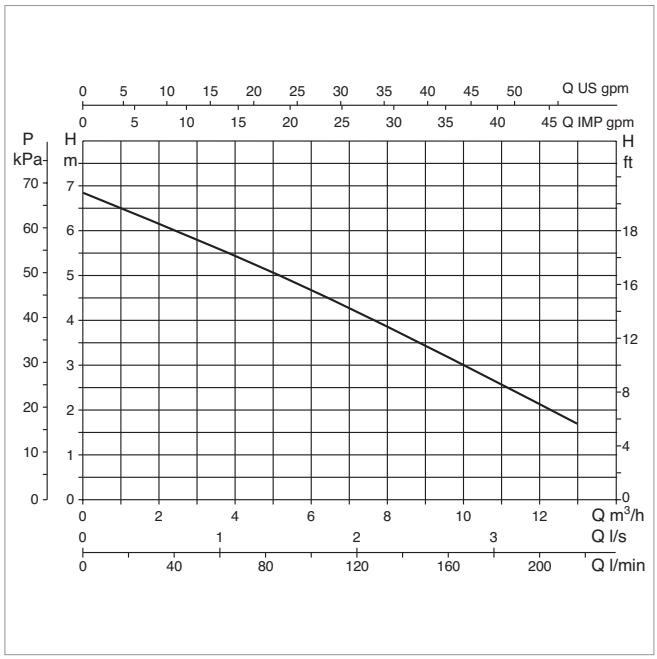

The performance curves are based on kinematic viscosity values = 1 mm²/s and density equal to 1000 kg/m³. Curve tolerance according to ISO 9906.

MODEL	ELECTRICAL DATA						
	POWER INPUT 50 Hz	P1 MAX kW	P2 NOMINAL		In A	CAPACITOR	
			kW	HP		µF	Vc
NOVABOX 30/300.1M	1 x 220-240 V ~	0.29	0.22	0.3	1.3	8	450
NOVABOX 30/300.1M-SV	1 x 220-240 V ~	0.29	0.22	0.3	1.3	-	-

MODEL	A	B	C	D	E	F	H	H1	H2	PACKING DIMENSIONS			VOLUME (m^3)	WEIGHT kg
										L/A	L/B	H		
NOVABOX 30/300.1M	407	309	94	204	314	72	360	100	254	45	33	38	0.056	9.2

DAB PUMPS reserves the right to make modifications without notice.

FEKABOX 110

1 PUMP AUTOMATIC LIFTING STATIONS

TECHNICAL DATA

Operating range:
from 1 to 24 m³/h with head up to 9 metres.
Liquid temperature range: + 45° C
Pumped liquid:
waste water and domestic drains.
Installation: inside the building, secured to the floor.
It cannot be driven or walked on.

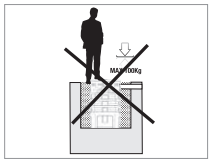

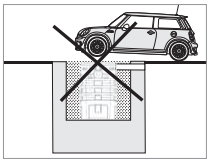
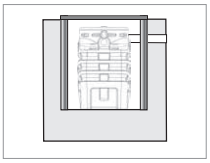

APPLICATIONS

Pumping stations suitable for the collection and redirection to the sewer network, of domestic drain water (waste, dirty, rain), of basements and garages, for one dwelling, when the sewer network cannot be reached due to gravity issues.

CONSTRUCTION FEATURES

CAPACITY: 110 l
MATERIALS: LLDPE
CONNECTIONS
- Inputs DN 50/110
- Ventilation DN 50
- Horizontal or vertical G2" output

COMPONENTS INCLUDED:
- Complete pump installation kit (see pump installation image).
- Cable gland for individual pump
- 2” F x 1 x ¼ M connector for FEKA 600

COMPONENTS NOT INCLUDED
- Pump: to be selected according to the possible configurations.

PUMP INSTALLATION

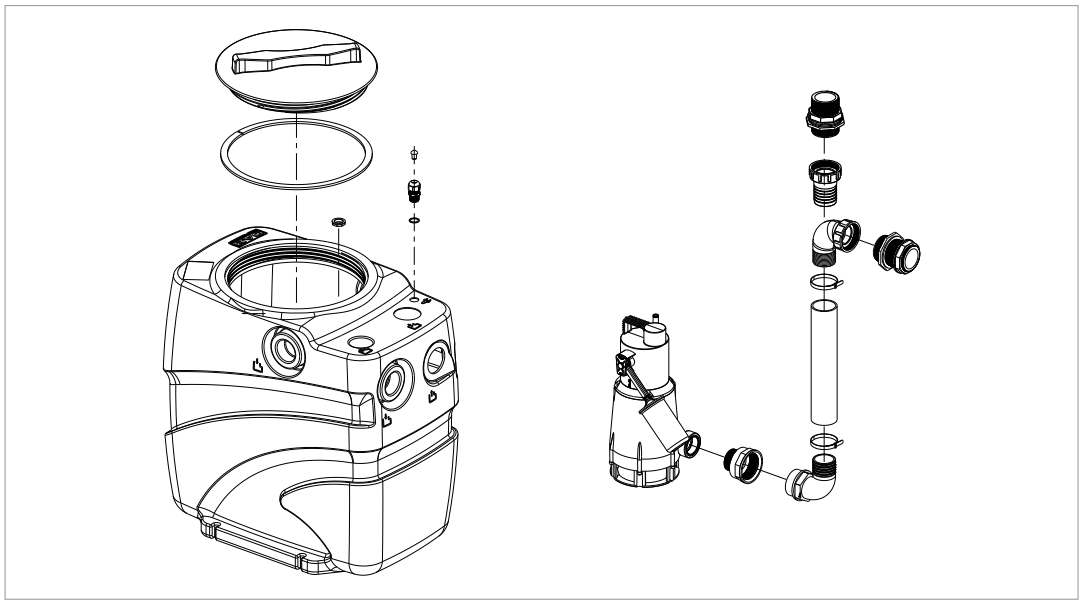

FEKABOX 110 - AUTOMATIC WASTE WATER LIFTING AND COLLECTION STATIONS

Liquid temperature range: +50 °C

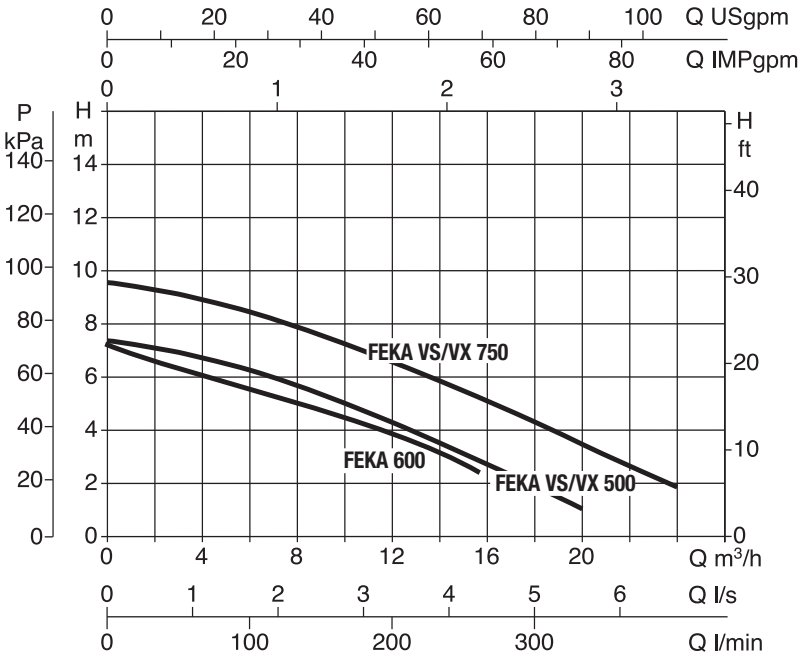

The performance curves are based on kinematic viscosity values = 1 mm²/s and density equal to 1000 kg/m³.
Curve tolerance according to ISO 9906.

CONFIGURATIONS

PUMP MODEL	ELECTRICAL DATA				
	POWER INPUT 50 HZ	P1 MAX kW	P2 NOMINAL		In A
			kW	HP	
FEKA 600 M-A	1X220-240 V~	1	0.55	0.75	4.3
FEKA VS/VX 550 M-A	1X220 - 240 V~	0.9	0.55	0.75	4.2
FEKA VS/VX 750 M-A	1X220 - 240 V~	1.1	0.75	1	5.13

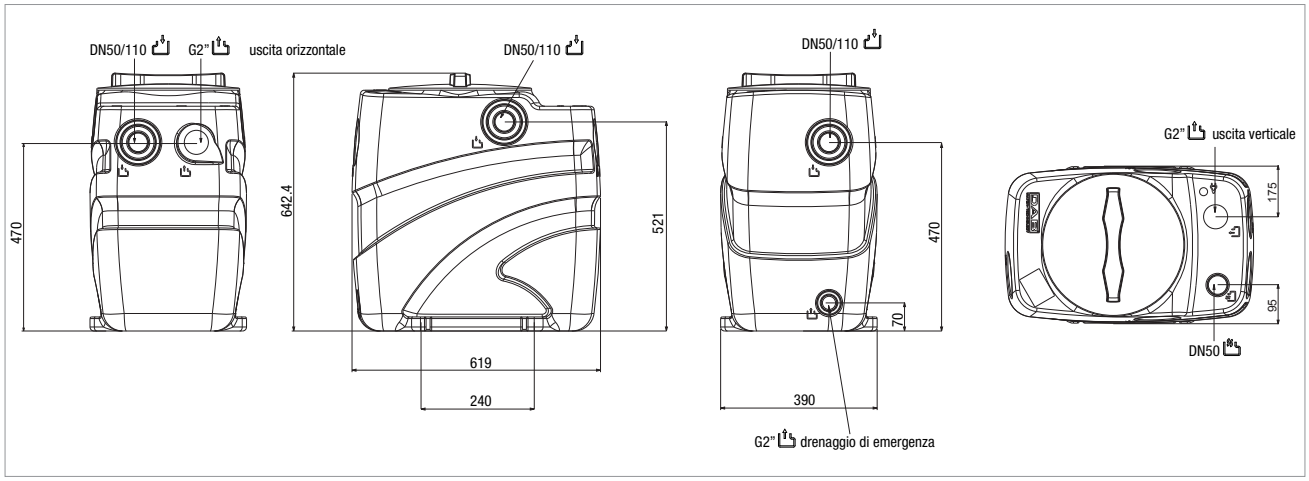

SIZES AND WEIGHTS

PACKING DIMENSIONS			WEIGHT Kg
L/A	L/B	H	
650	400	665	10.3

LEGEND:

- Emergency output or delivery piping connection
- Collection piping input
- Power and float cable output
- Ventilation pipe connection
- Recyclable material

DAB PUMPS reserves the right to make modifications without notice.

FEKABOX 200

1 PUMP AUTOMATIC LIFTING STATIONS

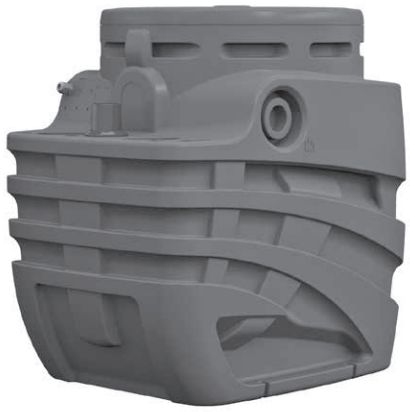

TECHNICAL DATA

Operating range: from 1 to 24 m³/h with head up to 15 metres.
Pumped liquid: ground water, rain water, clear waste water, grey waste water, and river or lake water.
Maximum temperature of liquid: 45 °C
Installation: Secured to the floor if inside a building. Underground if outside the building.
It cannot be driven on, but it can be walked on, maximum weight 100 kg.

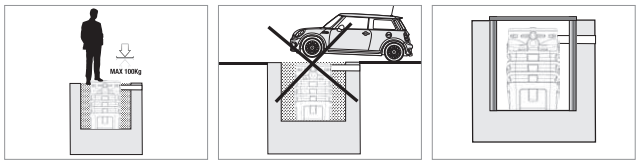

APPLICATIONS

Pumping stations suitable for the collection and redirection to the sewer network, of domestic drain water (waste, dirty, rain), of basements and garages, for one or more dwellings, when the sewer network cannot be reached due to gravity issues.

CONSTRUCTION FEATURES

CAPACITY: 200 lt
MATERIALS: LLDPE
STANDARDS 12050-1
CONNECTIONS
- DN 50/110 inputs
- DN 50 ventilation
- G2” output

COMPONENTS INCLUDED:
- 2” PP lifting device
  and rotation prevention bracket for FEKA VS and VX
- Cable gland for individual pump
- 2” F x 1 x ¼ M connector for FEKA 600
- FEKA VS and VX float cable stop kit

COMPONENTS NOT INCLUDED
- Pump: to be selected according to the possible configurations
- Alarm float support

PUMP INSTALLATION

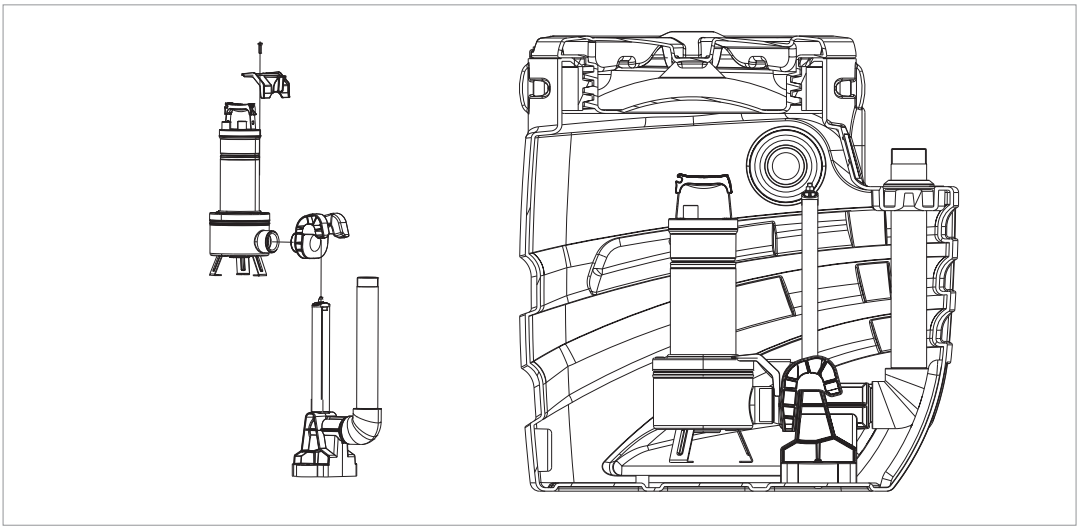

FEKABOX 200 - WASTE WATER AUTOMATIC COLLECTION AND LIFTING STATIONS

Maximum temperature of liquid: 45°C

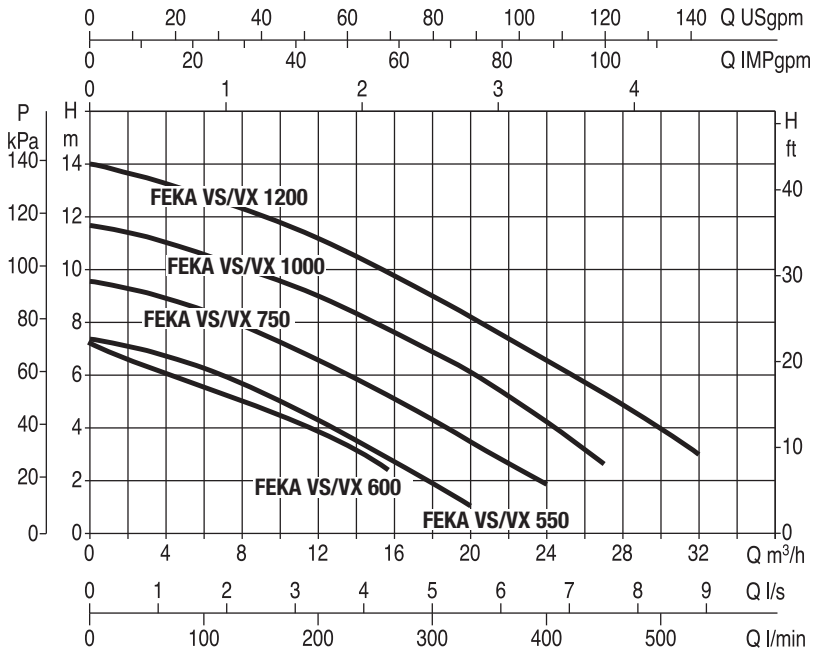

The performance curves are based on kinematic viscosity values = 1 mm²/s and density equal to 1000 kg/m³. Curve tolerance according to ISO 9906.

CONFIGURATIONS

PUMP MODEL	ELECTRICAL DATA				
	POWER INPUT 50 HZ	P1 MAX kW	P2 NOMINAL		In A
			kW	HP	
FEKA 600 M-A	1X220-240 V~	1	0.55	0.75	4.3
FEKA VS/VX 550 M-A	1X220 - 240 V~	0.9	0.55	0.75	4.2
FEKA VS/VX 750 M-A	1X220 - 240 V~	1.1	0.75	1	5.13
FEKA VS/VX 1000 M-A	1X220 - 240 V~	1.4	1	1.36	6.63
FEKA VS/VX 1200 M-A	1X220 - 240 V~	1.9	1.2	1.6	8.63

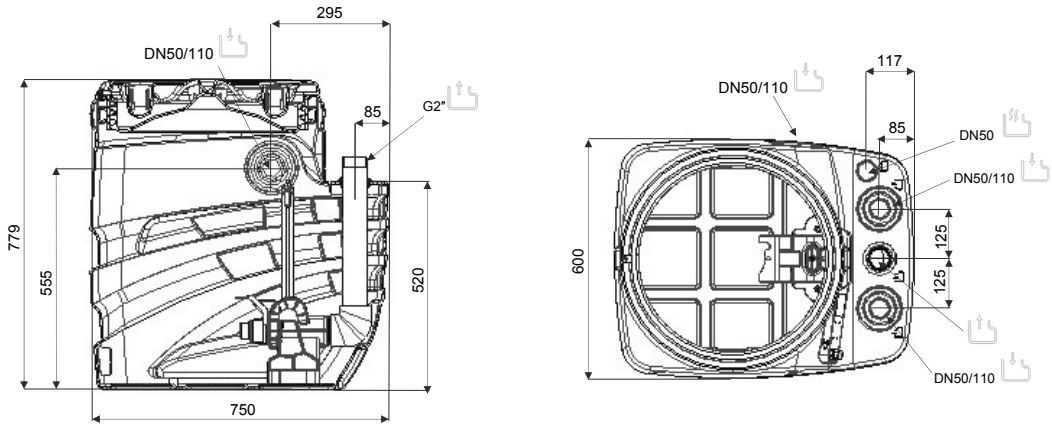

SIZES AND WEIGHTS

PACKING DIMENSIONS			WEIGHT Kg
L/A	L/B	H	
750	600	779	23.2

LEGEND:

- Emergency output or delivery piping connection
- Collection piping input
- Power and float cable output
- Ventilation pipe connection
- Recyclable material

FEKAFOS 280

1 PUMP AUTOMATIC LIFTING STATIONS

TECHNICAL DATA

Operating range:
from 1 to 32 m^3/h with head up to 23 metres.
Pumped liquid: ground water, rain water, clear waste water, grey waste water, and river or lake water.
Maximum temperature of liquid: 45 °C
Installation: Secured to the floor if inside a building. Underground if outside the building.
It cannot be driven on, but it can be walked on, maximum weight 100 kg.

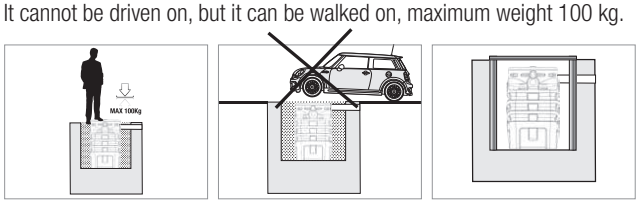

APPLICATIONS

Pumping stations suitable for the collection and redirection to the sewer network, of domestic drain water (waste, dirty, rain), of basements and garages, for one or more dwellings, when the sewer network cannot be reached due to gravity issues.

CONSTRUCTION FEATURES

CAPACITY: 280 lt
MATERIALS: LLDPE
STANDARDS 12050-1
CONNECTIONS
- Inputs DN 50/110
- Ventilation DN 50
- G2” output

COMPONENTS INCLUDED:
- DSD2” lifting device
  and rotation prevention bracket for FEKA VS and VX
- 4 cable glands for single pump and floats
- 2” F x 1 x ¼ M connector for FEKA 600
- FEKA VS and VX float cable stop kit
- 2 floats and alarm float support

COMPONENTS NOT INCLUDED
- Pump: to be selected according to the possible configurations
- Panel: to be selected according to the possible configurations
- Overflow alarm float

PUMP INSTALLATION

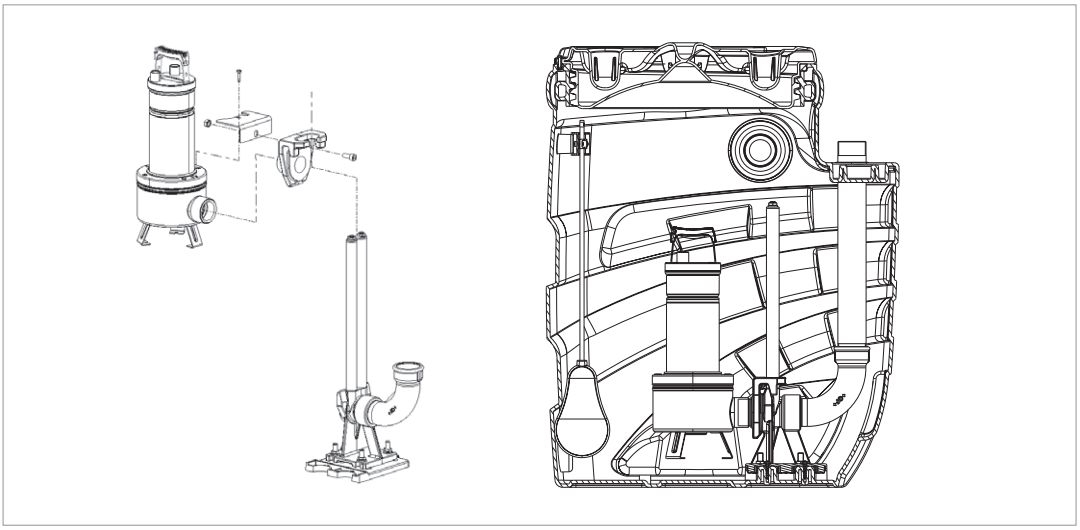

FEKAFOS 280 - WASTE WATER AUTOMATIC COLLECTION AND LIFTING STATIONS

Maximum temperature of liquid: 45°C

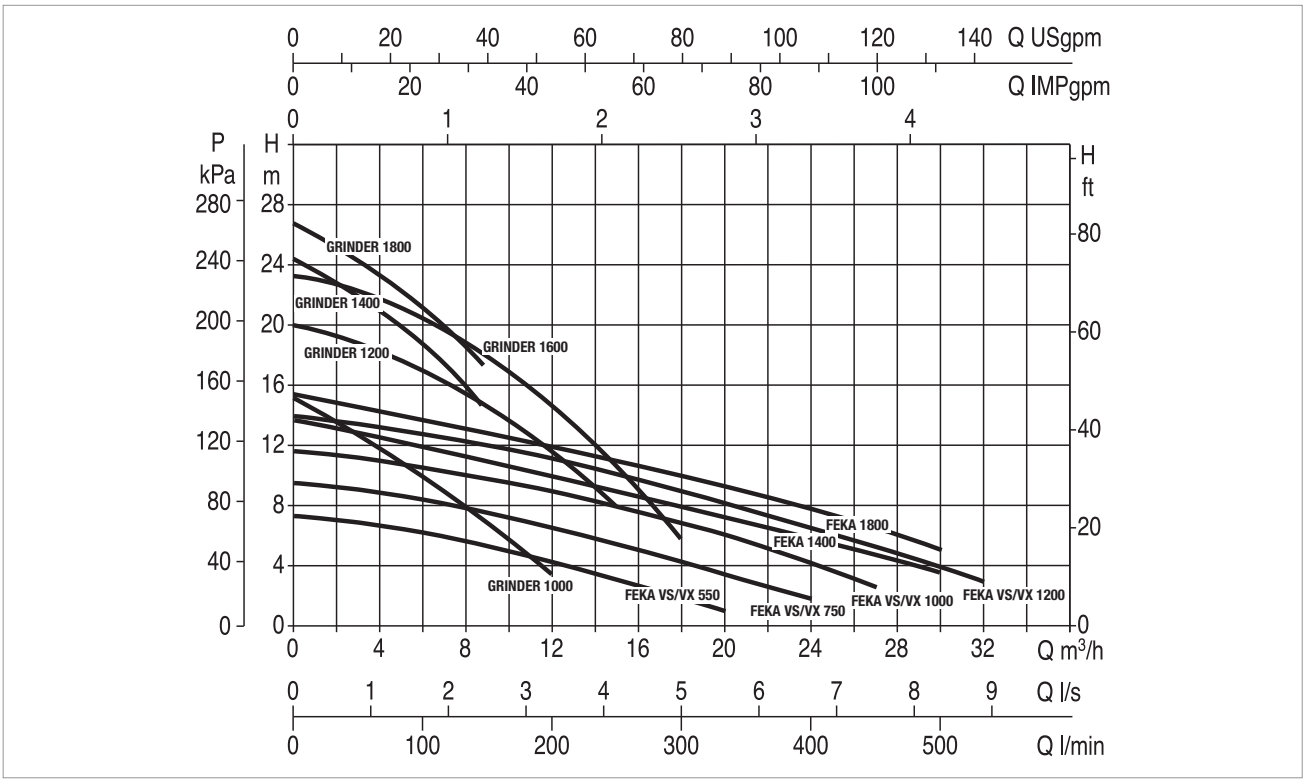

The performance curves are based on kinematic viscosity values = 1 mm²/s and density equal to 1000 kg/m³. Curve tolerance according to ISO 9906.

CONFIGURATIONS

MODEL PUMP	ELECTRICAL DATA					PANEL MATCHING
	POWER INPUT 50 HZ	P1 MAX kW	P2 NOMINAL		In A	
			kW	HP		
FEKA VS/VX 550 M-NA	1X220 - 240 V~	0,9	0,55	0,75	4,2	ED 1 M
FEKA VS/VX 550 T-NA	3X400 V~	0,9	0,55	0,75	1,64	ED 1 T
FEKA VS/VX 750 M-NA	1X220 - 240 V~	1,1	0,75	1	5,13	ED 1 M
FEKA VS/VX 750 T-NA	3X400 V~	1,1	0,75	1	1,94	ED 1 T
FEKA VS/VX 1000 M-NA	1X220 - 240 V~	1,4	1	1,36	6,63	ED 1,5 M
FEKA VS/VX 1000 T-NA	3X400 V~	1,4	1	1,36	2,51	ED 1,5 T
FEKA VS/VX 1200 M-NA	1X220 - 240 V~	1,9	1,2	1,6	8,63	ED 1,5 M
FEKA VS/VX 1200 T-NA	3X400 V~	1,9	1,2	1,6	3,44	ED 1,5 T
FEKA 1400 M	1X220 - 240 V~	1,8	1,1	1,5	8,5	ED 3 M 40 µF
FEKA 1800 T	3X400 V~	1,9	1,5	2,0	3,7	ED 1,5 T
GRINDER 1400 M	1X220 - 240 V~	1,9	1,1	1,5	8,7	ED 3 MHS
GRINDER 1800 T	3X400 V~	2	1,5	2,0	3,8	ED 1,5 T
GRINDER 1000 M-NA	1X220 - 240 V~	1,5	1	1,3	8	ED 1,5 M
GRINDER 1000 T	3X400 V~	1,6	1	1,3	2,8	ED 1,5 T
GRINDER 1200 M-NA	1X220 - 240 V~	2,8	1,5	2	12,7	ED 2 M
GRINDER 1200 T	3X400 V~	2,7	1,5	2	4,7	ED 2,5 T
GRINDER 1600 M-NA	1X220 - 240 V~	3,8	1,8	2,4	16,8	ED 2,4 M
GRINDER 1600 T	3X400 V~	3,3	1,8	2,4	5,8	ED 2,5 T

DAB PUMPS reserves the right to make modifications without notice.

FEKAFOS 280 - WASTE WATER AUTOMATIC COLLECTION AND LIFTING STATIONS

Maximum temperature of liquid: 45°C

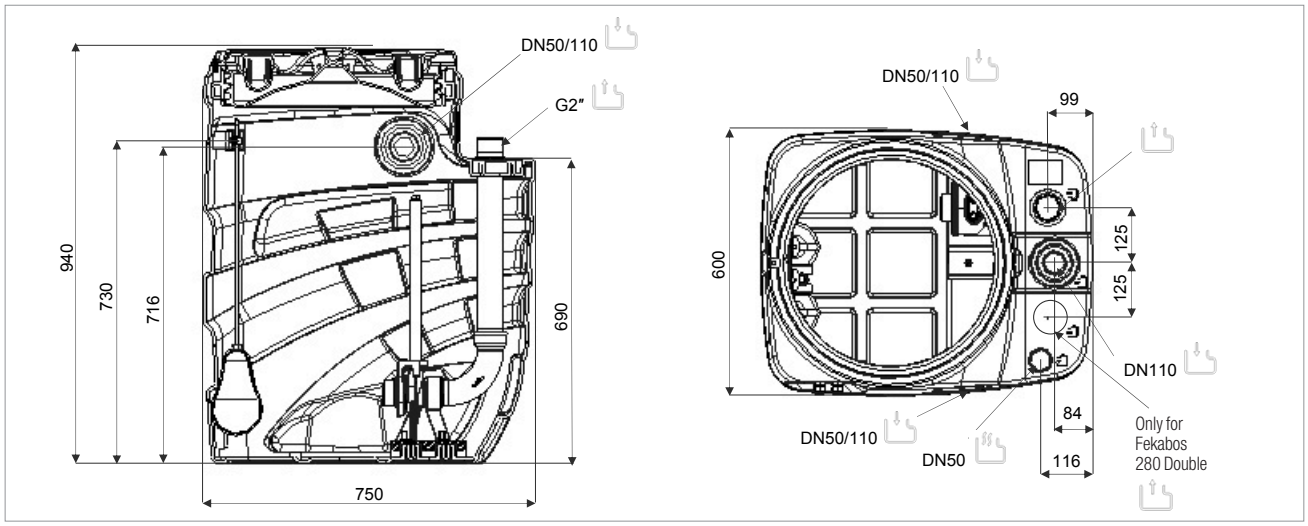

SIZES AND WEIGHTS

PACKING DIMENSIONS			WEIGHT Kg
L/A	L/B	H	
750	600	940	40.5

LEGEND:

- Emergency output or delivery piping connection
- Collection piping input
- Power and float cable output
- Ventilation pipe connection
- Recyclable material

FEKAFOS 280 DOUBLE

2 PUMP AUTOMATIC LIFTING STATIONS

TECHNICAL DATA

Operating range:
from 1 to 32 m^3/h with head up to 23 metres.
Pumped liquid: ground water, rain water, clear waste water, grey waste water, and river or lake water.
Maximum temperature of liquid: 45°C
Installation: Secured to the floor if inside a building. Underground if outside the building.
It cannot be driven on, but it can be walked on, maximum weight 100 kg.

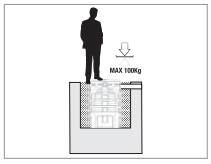

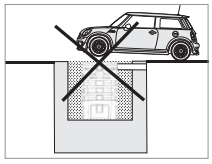

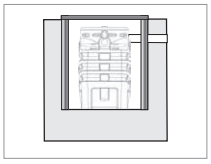

APPLICATIONS

Pumping stations suitable for the collection and redirection to the sewer network, of domestic drain water (waste, dirty, rain), of basements and garages, for one or more dwellings, when the sewer network cannot be reached due to gravity issues.

CONSTRUCTION FEATURES

CAPACITY: 280 lt
MATERIALS: LLDPE
STANDARDS 12050-1
CONNECTIONS
- DN 50/110 inputs
- DN 50 ventilation
- G2” output

COMPONENTS INCLUDED:
- 2 DSD2” lifting devices
  and rotation prevention bracket for FEKA VS and VX
- 6 cable glands for double pump and floats
- 2 FEKA VS and VX float cable stop kits
- 3 floats and alarm float support

COMPONENTS NOT INCLUDED
- Pump: to be selected according to the possible configurations
- Panel: to be selected according to the possible configurations
- Overflow alarm float

PUMP INSTALLATION

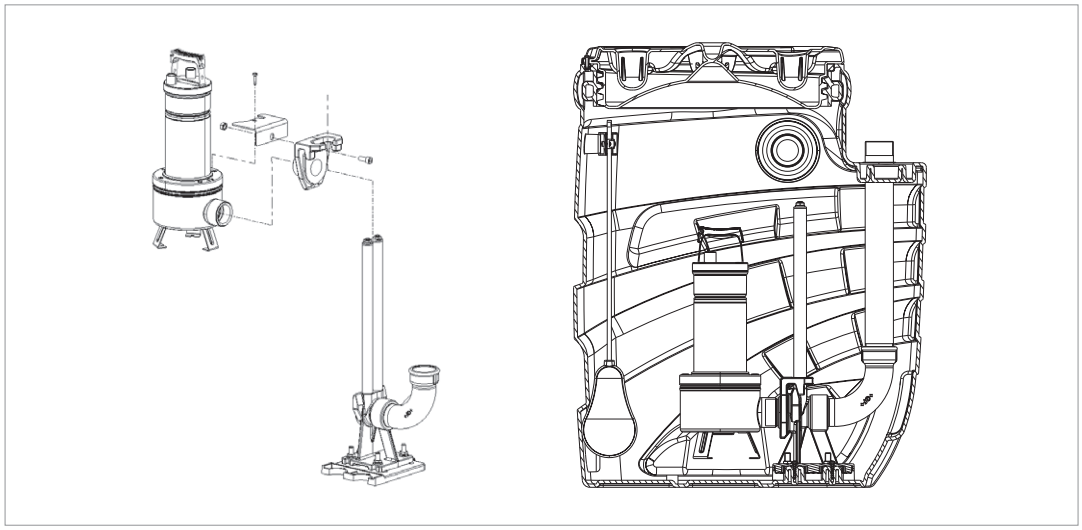

FEKAFOS 280 DOUBLE - WASTE WATER AUTOMATIC COLLECTION AND LIFTING STATIONS

Maximum temperature of liquid: 45°C

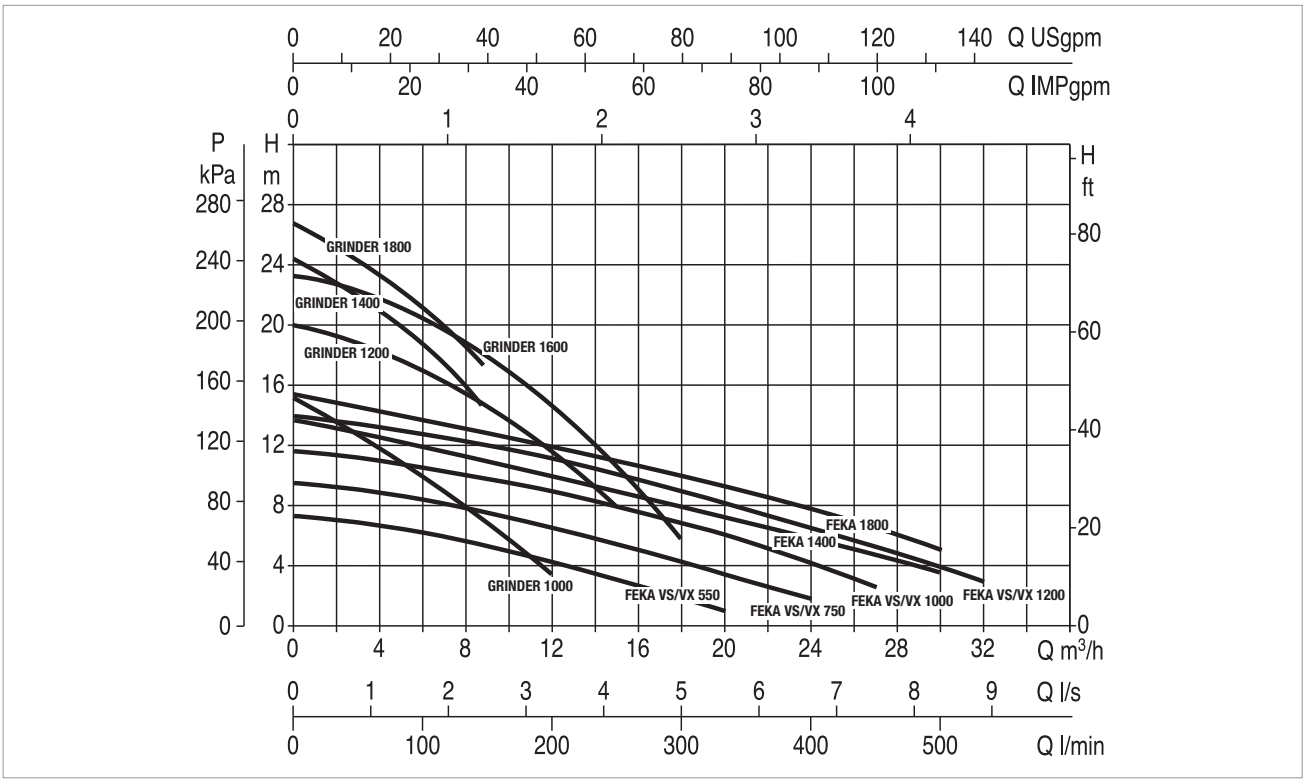

The performance curves are based on kinematic viscosity values = 1 mm²/s and density equal to 1000 kg/m³. Curve tolerance according to ISO 9906.

CONFIGURATIONS

PUMP MODEL	ELECTRICAL DATA					PANEL MATCHING		
	POWER INPUT 50 HZ	P1 MAX kW	P2 NOMINAL		In A	E2D	E.BOX BASIC / E.BOX BASIC D	E.BOX PLUS / E.BOX PLUS D
			kW	HP				
FEKA VS/VX 550 M-NA	1X220 - 240 V~	0,9	0,55	0,75	4,2	E2D 2 M	•	•
FEKA VS/VX 550 T-NA	3X400 V~	0,9	0,55	0,75	1,64	E2D 2 T		•
FEKA VS/VX 750 M-NA	1X220 - 240 V~	1,1	0,75	1	5,13	E2D 2 M	•	•
FEKA VS/VX 750 T-NA	3X400 V~	1,1	0,75	1	1,94	E2D 2 T		•
FEKA VS/VX 1000 M-NA	1X220 - 240 V~	1,4	1	1,36	6,63	E2D 3 M	•	•
FEKA VS/VX 1000 T-NA	3X400 V~	1,4	1	1,36	2,51	E2D 3 T		•
FEKA VS/VX 1200 M-NA	1X220 - 240 V~	1,9	1,2	1,6	8,63	E2D 3 M	•	•
FEKA VS/VX 1200 T-NA	3X400 V~	1,9	1,2	1,6	3,44	E2D 3 T		•
FEKA 1400 M	1X220 - 240 V~	1,8	1,1	1,5	8,5	E2D 6 M 40 µF	•	•
FEKA 1800 T	3X400 V~	1,9	1,5	2,0	3,7	E2D 3 T		•
GRINDER 1400 M	1X220 - 240 V~	1,9	1,1	1,5	8,7	E2D 6 M HS	•	
GRINDER 1800 T	3X400 V~	2	1,5	2,0	3,8	E2D 3 T		•
GRINDER 1000 M-NA	1X220 - 240 V~	1,5	1	1,3	8	E2D 3 M	•	•
GRINDER 1000 T	3X400 V~	1,6	1	1,3	2,8	E2D 3 T		•
GRINDER 1200 M-NA	1X220 - 240 V~	2,8	1,5	2	12,7	E2D 4 M	•	•
GRINDER 1200 T	3X400 V~	2,7	1,5	2	4,7	E2D 5 T		•
GRINDER 1600 M-NA	1X220 - 240 V~	3,8	1,8	2,4	16,8	E2D 4,8 M	•	•
GRINDER 1600 T	3X400 V~	3,3	1,8	2,4	5,8	E2D 5 T		•

FEKAFOS 280 DOUBLE - WASTE WATER AUTOMATIC COLLECTION AND LIFTING STATIONS

Maximum temperature of liquid: 45°C

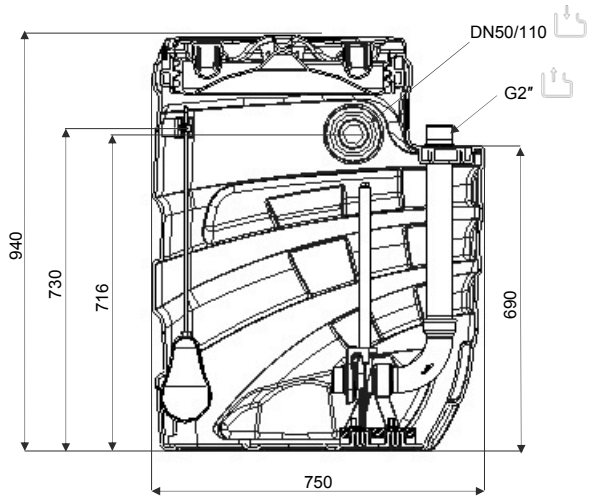

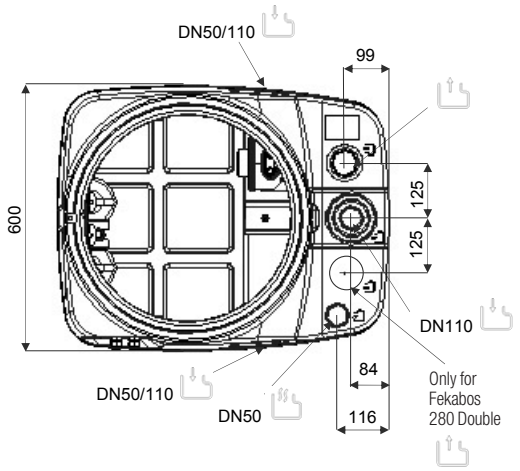

SIZES AND WEIGHTS

PACKING DIMENSIONS			WEIGHT Kg
L/A	L/B	H	
750	600	940	53.7

LEGEND:

- Emergency output or delivery piping connection
- Collection piping input
- Power and float cable output
- Ventilation pipe connection
- Recyclable material

FEKAFOS 550 DOUBLE

2 PUMP AUTOMATIC LIFTING STATIONS

TECHNICAL DATA

Operating range:
from 1 to 32 m³/h with head up to 23 metres.
Liquid temperature range: + 45° C
Pumped liquid: ground water, rain water, clear waste water, grey waste water, and river or lake water.
Installation: Secured to the floor if inside a building. Underground if outside the building.
It cannot be driven on, but it can be walked on, maximum weight 100 kg.

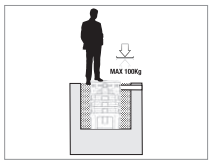

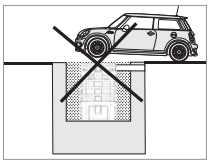
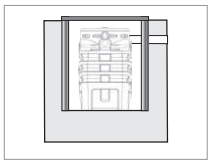

APPLICATIONS

Pumping stations suitable for the collection and redirection to the sewer network, of domestic drain water (waste, dirty, rain), of basements and garages, for one or more dwellings, when the sewer network cannot be reached due to gravity issues.

CONSTRUCTION FEATURES

CAPACITY: 550 lt
MATERIALS: LLDPE
CONNECTIONS
- Inputs DN 50/110
- Ventilation DN 50
- G2” output

COMPONENTS INCLUDED:
- 2 DSD2" lifting devices and rotation prevention bracket for FEKA VS and VX
- 6 cable glands for double pump and floats
- 2 FEKA VS and VX float cable stop kits
- 3 floats and alarm float support

COMPONENTS NOT INCLUDED
- Pump: to be selected according to the possible configurations.
- Panel: to be selected according to the possible configurations
- Overflow alarm float

PUMP INSTALLATION

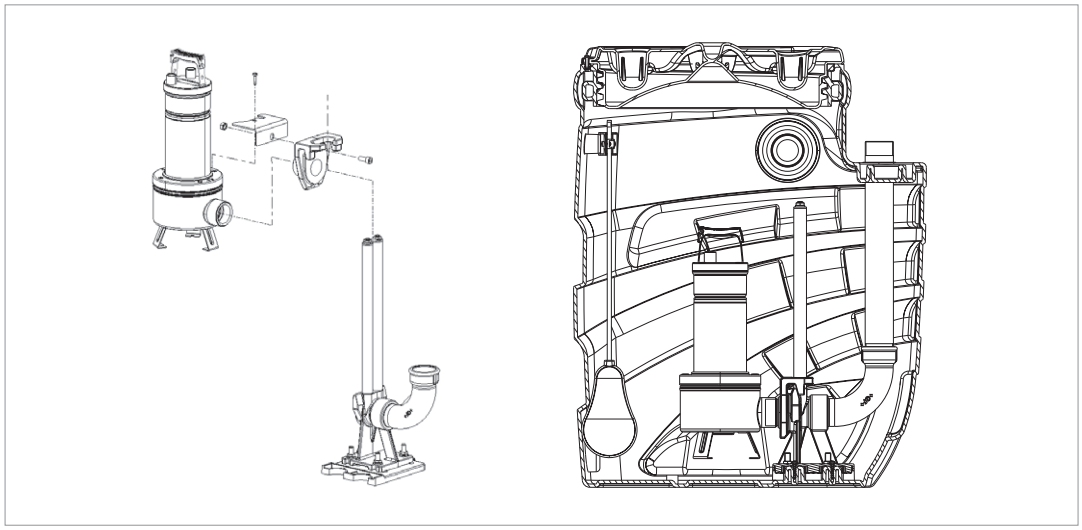

FEKAFOS 550 DOUBLE - AUTOMATIC WASTE WATER LIFTING AND COLLECTION STATIONS

Liquid temperature range: +45 °C

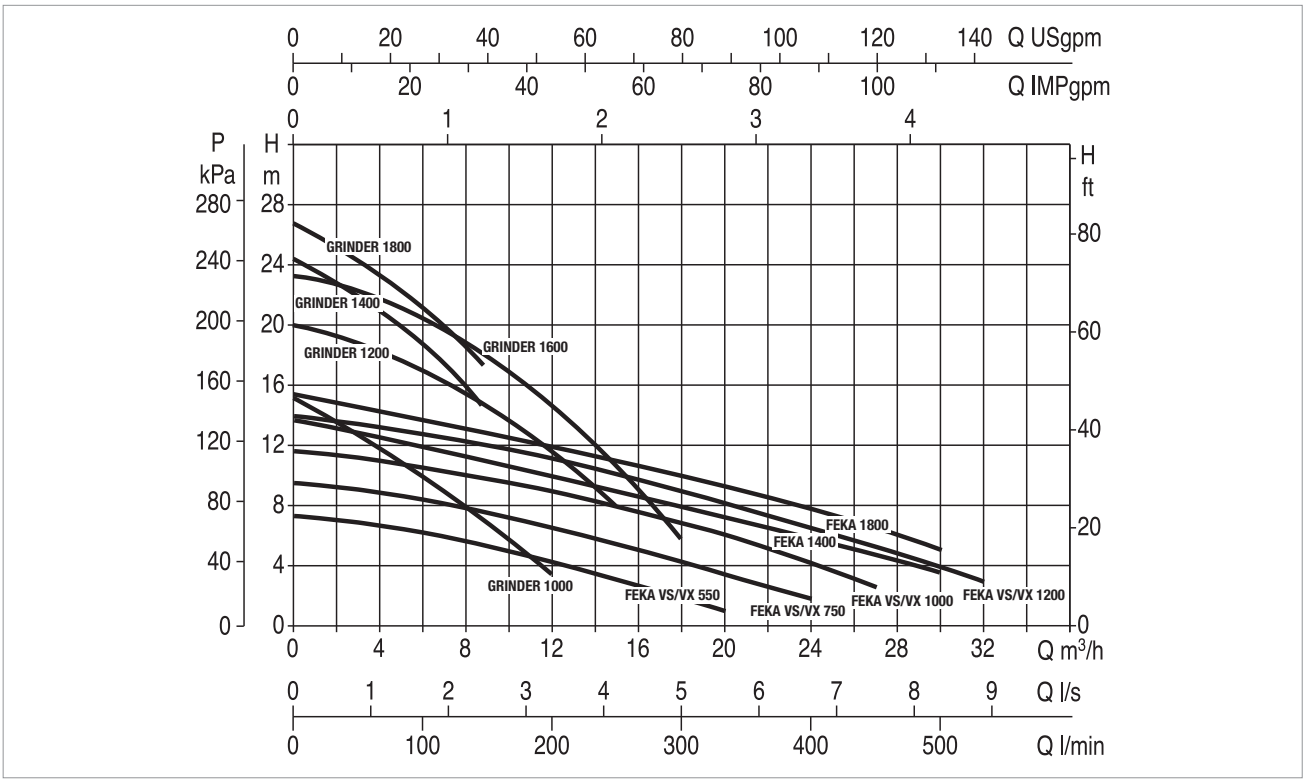

The performance curves are based on kinematic viscosity values = 1 mm²/s and density equal to 1000 kg/m³. Curve tolerance according to ISO 9906.

CONFIGURATIONS

MODEL PUMP	ELECTRICAL DATA					PANEL MATCHING		
	POWER INPUT 50 HZ	P1 MAX kW	P2 NOMINAL		In A	E2D	E.BOX BASIC / E.BOX BASIC D	E.BOX PLUS / E.BOX PLUS D
			kW	HP				
FEKA VS/VX 550 M-NA	1X220 - 240 V~	0,9	0,55	0,75	4,2	**E2D 2 M**	•	•
FEKA VS/VX 550 T-NA	3X400 V~	0,9	0,55	0,75	1,64	**E2D 2 T**		•
FEKA VS/VX 750 M-NA	1X220 - 240 V~	1,1	0,75	1	5,13	**E2D 2 M**	•	•
FEKA VS/VX 750 T-NA	3X400 V~	1,1	0,75	1	1,94	**E2D 2 T**		•
FEKA VS/VX 1000 M-NA	1X220 - 240 V~	1,4	1	1,36	6,63	**E2D 3 M**	•	•
FEKA VS/VX 1000 T-NA	3X400 V~	1,4	1	1,36	2,51	**E2D 3 T**		•
FEKA VS/VX 1200 M-NA	1X220 - 240 V~	1,9	1,2	1,6	8,63	**E2D 3 M**	•	•
FEKA VS/VX 1200 T-NA	3X400 V~	1,9	1,2	1,6	3,44	**E2D 3 T**		•
FEKA 1400 M	1X220 - 240 V~	1,8	1,1	1,5	8,5	**E2D 6 M 40 µF**	•	•
FEKA 1800 T	3X400 V~	1,9	1,5	2,0	3,7	**E2D 3 T**		•
GRINDER 1400 M	1X220 - 240 V~	1,9	1,1	1,5	8,7	**E2D 6 M HS**	•	
GRINDER 1800 T	3X400 V~	2	1,5	2,0	3,8	**E2D 3 T**		•
GRINDER 1000 M-NA	1X220 - 240 V~	1,5	1	1,3	8	**E2D 3 M**	•	•
GRINDER 1000 T	3X400 V~	1,6	1	1,3	2,8	**E2D 3 T**		•
GRINDER 1200 M-NA	1X220 - 240 V~	2,8	1,5	2	12,7	**E2D 4 M**	•	•
GRINDER 1200 T	3X400 V~	2,7	1,5	2	4,7	**E2D 5 T**		•
GRINDER 1600 M-NA	1X220 - 240 V~	3,8	1,8	2,4	16,8	**E2D 4,8 M**	•	•
GRINDER 1600 T	3X400 V~	3,3	1,8	2,4	5,8	**E2D 5 T**		•

DAB PUMPS reserves the right to make modifications without notice.

FEKAFOS 550 DOUBLE - AUTOMATIC WASTE WATER LIFTING AND COLLECTION STATIONS

Liquid temperature range: +45 °C

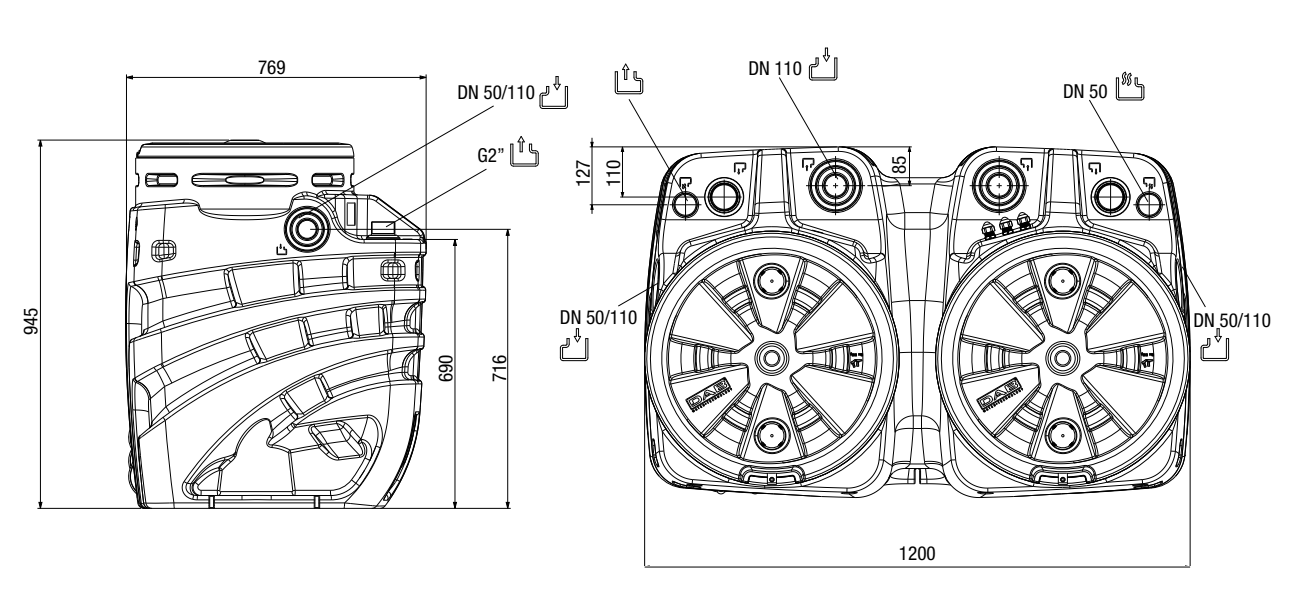

SIZES AND WEIGHTS

PACKING DIMENSIONS			WEIGHT Kg
L/A	L/B	H	
790	1220	965	74

LEGEND:

- Emergency output or delivery piping connection
- Collection piping input
- Power and float cable output
- Ventilation pipe connection
- Recyclable material

FEKAFOS 1200 - 2000 - 3800

2 PUMP AUTOMATIC LIFTING STATIONS

TECHNICAL DATA

Operating range:
from 1 to 48 m³/h with head up to 23 metres.
Liquid temperature range: + 55° C.
Pumped liquid: ground water, rain water, clear waste water, grey waste water, and river or lake water.
Installation: Installed underground outside the building.
It cannot be driven on, but it can be walked on, maximum weight 100 kg.
See the installation information in the technical appendix.

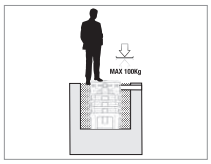

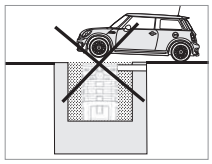

APPLICATIONS

Pumping stations suitable for the collection and redirection to the sewer network, of domestic drain water (waste, dirty, rain), of basements and garages, for several dwellings, when the sewer network cannot be reached due to gravity issues.

CONSTRUCTION FEATURES

CAPACITY: 1200/2000/3800 l
MATERIALS: POLYETHYLENE
CONNECTIONS
- DN 160 input.
- Ventilation DN 50
- 2" or 2 1/2" output.

COMPONENTS INCLUDED:
- 2 DN 50 or DN 65 lifting devices.
  (DN 80 available on request with a dedicated tank configuration).
- 3 bulb float.
- DN 160 size T input manifold.
- 2" or 2" 1/2 output manifold.
- Safety grid and cover suitable to be walked on. Maximum weight 100 kg.

COMPONENTS NOT INCLUDED
- Pump: to be selected according to the possible configurations.
- Alarm float available on request.
- Ball check valves installed on the inside. To enable correct and easy maintenance of the same, there is the possibility of ordering a separate polyethylene well with 2 check valves, and 2 gate valves ready for configuration with the Fekafos tank. (see Accessories).
- The height of the input of the tank can be adjusted thanks to a 300 mm elevation to be specified with the order (see Accessories).

PUMP INSTALLATION

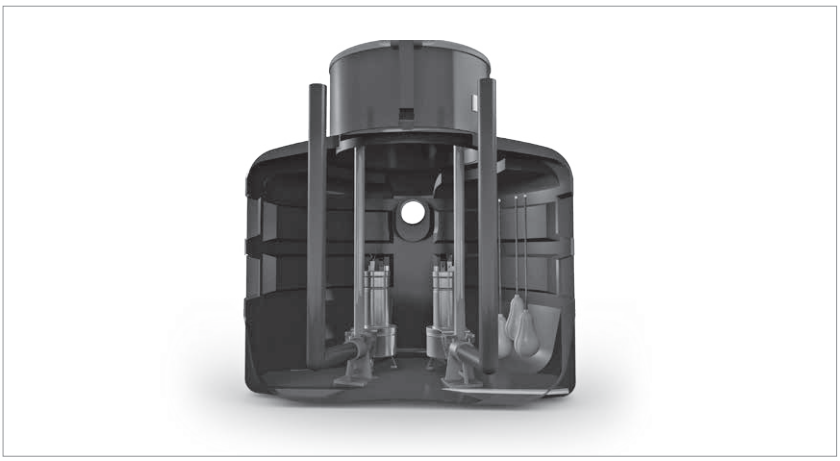

DAB PUMPS reserves the right to make modifications without notice.

FEKAFOS 1200-2000-3800 - AUTOMATIC WASTE WATER LIFTING AND COLLECTION STATIONS

Liquid temperature range: +55 °C

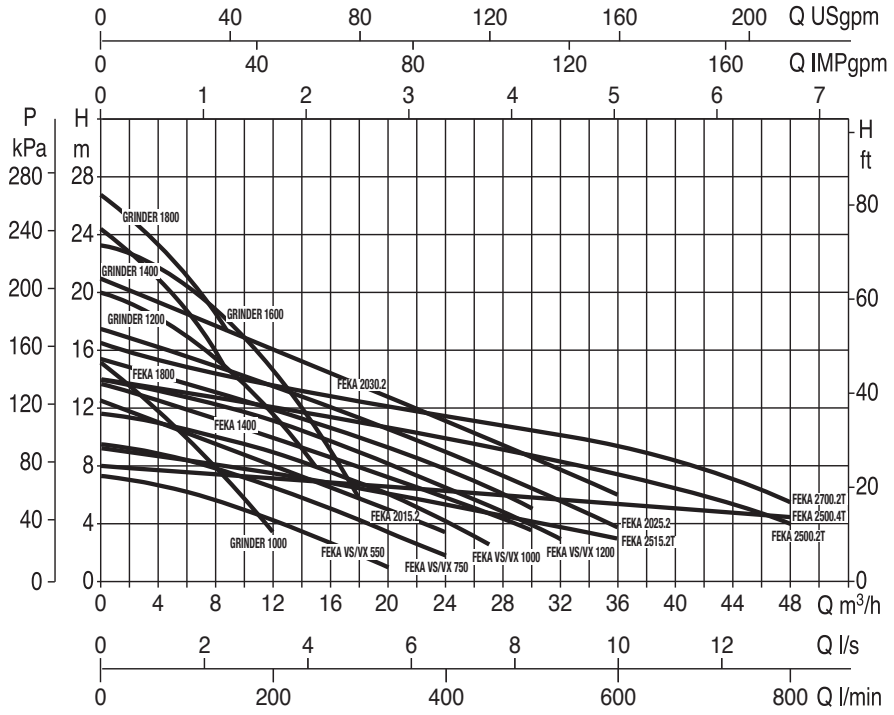

The performance curves are based on kinematic viscosity values = 1 mm²/s and density equal to 1000 kg/m³. Curve tolerance according to ISO 9906.

CONFIGURATIONS

MODEL PUMP	ELECTRICAL DATA					PANEL MATCHING		
	POWER INPUT 50 HZ	P1 MAX kW	P2 NOMINAL		In A	E2D	E.BOX BASIC / E.BOX BASIC D	E.BOX PLUS / E.BOX PLUS D
			kW	HP				
FEKA VS/VX 550 M-NA	1X220 - 240 V~	0,9	0,55	0,75	4,2	**E2D 2 M**	•	•
FEKA VS/VX 550 T-NA	3X400 V~	0,9	0,55	0,75	1,64	**E2D 2 T**		•
FEKA VS/VX 750 M-NA	1X220 - 240 V~	1,1	0,75	1	5,13	**E2D 2 M**	•	•
FEKA VS/VX 750 T-NA	3X400 V~	1,1	0,75	1	1,94	**E2D 2 T**		•
FEKA VS/VX 1000 M-NA	1X220 - 240 V~	1,4	1	1,36	6,63	**E2D 3 M**	•	•
FEKA VS/VX 1000 T-NA	3X400 V~	1,4	1	1,36	2,51	**E2D 3 T**		•
FEKA VS/VX 1200 M-NA	1X220 - 240 V~	1,9	1,2	1,6	8,63	**E2D 3 M**	•	•
FEKA VS/VX 1200 T-NA	3X400 V~	1,9	1,2	1,6	3,44	**E2D 3 T**		•
FEKA 1400 M	1X220 - 240 V~	1,8	1,1	1,5	8,5	**E2D 6 M 40 µF**	•	•
FEKA 1800 T	3X400 V~	1,9	1,5	2,0	3,7	**E2D 3 T**		•
GRINDER 1400 M	1X220 - 240 V~	1,9	1,1	1,5	8,7	**E2D 6 M HS**	•	
GRINDER 1800 T	3X400 V~	2	1,5	2,0	3,8	**E2D 3 T**		•
GRINDER 1000 M-NA	1X220 - 240 V~	1,5	1	1,3	8	**E2D 3 M**	•	•
GRINDER 1000 T	3X400 V~	1,6	1	1,3	2,8	**E2D 3 T**		•
GRINDER 1200 M-NA	1X220 - 240 V~	2,8	1,5	2	12,7	**E2D 4 M**	•	•
GRINDER 1200 T	3X400 V~	2,7	1,5	2	4,7	**E2D 5 T**		•
GRINDER 1600 M-NA	1X220 - 240 V~	3,8	1,8	2,4	16,8	**E2D 4,8 M**	•	•
GRINDER 1600 T	3X400 V~	3,3	1,8	2,4	5,8	**E2D 5 T**		•
FEKA 2015.2 M-NA	1X230 V~	1,6	1,1	1,5	8	**E2D 2,6 M**	•	•
FEKA 2015.2 T-NA	3X400 V~	1,5	1,1	1,5	2,8	**E2D 3 T**		•
FEKA 2025.2 T-NA	3X400 V~	2,2	1,8	2,4	4,1	**E2D 5 T**		•
FEKA 2030.2 T-NA	3X400 V~	3,3	2,2	3	5,6	**E2D 5 T**		•
FEKA 2500.4T	3X400 V~	2,8	1,4	1,9	4,9	**E2D 5 T**		•
FEKA 2515.2T	3X400 V~	1,9	1,1	1,5	3,3	**E2D 3 T**		•
FEKA 2500.2T	3X400 V~	2,8	1,8	2,4	4,7	**E2D 5 T**		•
FEKA 2700.2T	3X400 V~	3	2,18	2,9	5,7	**E2D 5 T**		•

FEKAFOS 1200-2000-3800 - AUTOMATIC WASTE WATER LIFTING AND COLLECTION STATIONS

Liquid temperature range: +55 °C

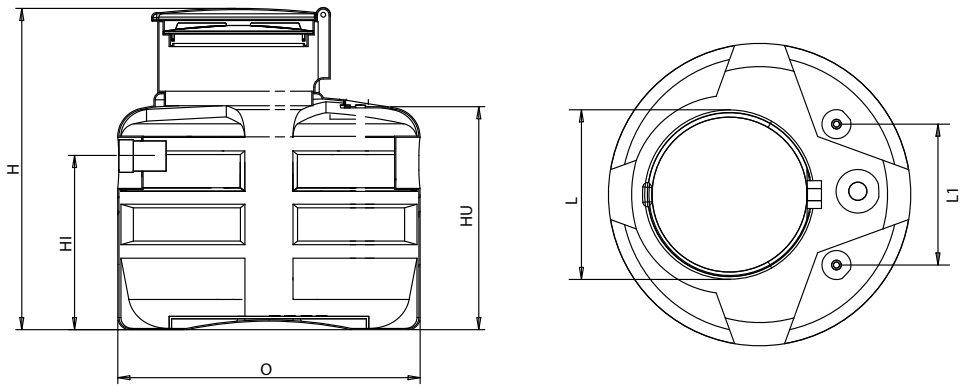

SIZES AND WEIGHTS

MODEL	H	HI	HU	Ø	L	L1	WEIGHT kg
FEKAFOS 1200 CP 2"	1420	730	1050	1250	680	520	110
FEKAFOS 1200 CP DN 65							
FEKAFOS 2000 CP 2"	2300	1620	1930	1250	680	520	150
FEKAFOS 2000 CP DN 65							
FEKAFOS 3800 CP 2"	1860	1270	1490	1800	680	600	170
FEKAFOS 3800 CP DN 65							

DAB PUMPS reserves the right to make modifications without notice.

NOTES

ACCESSORIES

CONTROL PANELS

PUMPING STATION ACCESSORIES

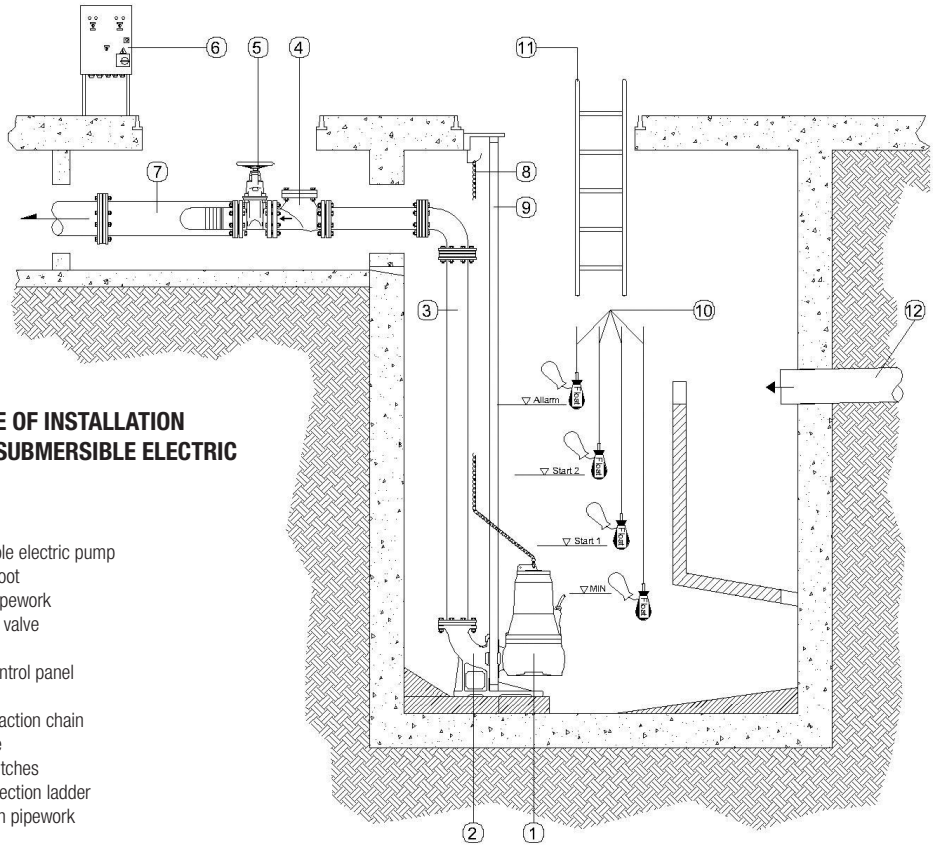

EXAMPLE OF INSTALLATION OF TWO SUBMERSIBLE ELECTRIC PUMPS

LEGEND:

1 Submersible electric pump
2 Coupling foot
3 Delivery pipework
4 Ball check valve
5 Gate valve
6 Electric control panel
7 Manifold
8 Pump extraction chain
9 Guide pipe
10 Level switches
11 Well inspection ladder
12 Adduction pipework

FLOATS	DESCRIPTION		DRENAG / NOVA	DIG	GRINDER	FEKA	SOCCORRER	FEKABOX / FEKAFOS
	FLOAT	5 metres	•	•	•	•	•	
		10 metres						
		15 metres						
		20 metres						
	BULB FLOAT	10 metres			•	•		•
		20 metres						
	300 g COUNTERWEIGHT FOR FLOAT		•	•	•	•	•	
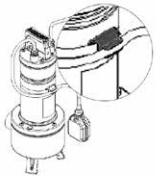	FEKA VS/VX FLOAT CABLE STOP KIT					•		•

PANEL CONTROL AND ALARMS	DESCRIPTION	DRENAG / NOVA	DIG	GRINDER	FEKA	SOCCORRER	FEKABOX / FEKAFOS
	CONTROL AS 1 WITH ALARM DEVICE	•	•	•	•		
	ACOUSTIC ALARM 230 V - 50 HZ	•	•	•	•		•
	ACOUSTIC ALARM 24 V - 50 HZ						
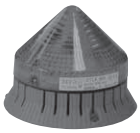	SOCCORRER ACOUSTIC VISUAL ALARM					•	
	FLASHING ORANGE 230 V	•	•	•	•		

CONTROL AND PROTECTION	DESCRIPTION	DRENAG / NOVA	DIG	GRINDER	FEKA	SOCCORRER	FEKABOX / FEKAFOS
	MDN (ONLY FOR Drenag/Feka 1400 M)	•			•	•	

TRANSDUCERS	DESCRIPTION	DRENAG / NOVA	DIG	GRINDER	FEKA
	0-5 m - 20 m LEVEL TRANDUCERS E-BOX PANEL CABLE	•	•	•	•

CLEVIS KIT	DESCRIPTION	DRENAG / NOVA	DIG	GRINDER	FEKA	FEKABOX / FEKAFOS
	CLEVIS KIT WITH 5 metre CHAIN	•		•	•	•
	CLEVIS KIT WITH 10 metre CHAIN					

TEAR PROOF CABLES	DESCRIPTION	DRENAG / NOVA	DIG	GRINDER	FEKA	FEKABOX / FEKAFOS
	TEAR PROOF CABLE (10 M) 3G 1,5 MM2 FOR DIG 1100-2200		•			
	TEAR PROOF CABLE (10 M) 4G 1,5 MM2 FOR DIG 1100-2200		•			
	TEAR PROOF CABLE (10 M) 4G 2,5 MM2 FOR DIG 3700-5500		•			
	TEAR PROOF CABLE (10 M) 4G 6 MM2 FOR DIG 8500-11000		•			

BALL CHECK VALVES	DESCRIPTION	DRENAG / NOVA	DIG	GRINDER	FEKA	FEKABOX / FEKAFOS
	BALL CHECK VALVE, PVC, 1 1" ¼ THREADED	•			•	
	BALL CHECK VALVE, PVC, 1 1" ½ THREADED	•			•	
	BALL CHECK VALVE, PVC, 2", THREADED	•		•	•	•
	BALL CHECK VALVE, 1" ¼, THREADED	•				
	BALL CHECK VALVE, 1" ½, THREADED	•				
	BALL CHECK VALVE, 2", THREADED	•		•	•	•
	BALL CHECK VALVE, 2" ½, THREADED	•			•	
	BALL CHECK VALVE, DN 50			•	•	•
	BALL CHECK VALVE, DN 65				•	•
	BALL CHECK VALVE, DN 80				•	
	BALL CHECK VALVE, DN 100				•	
	BALL CHECK VALVE, DN 150				•	
	BALL CHECK VALVE, DN 200				•	

BACKFLOW KIT	DESCRIPTION	DRENAG / NOVA	DIG	GRINDER	FEKA	FEKABOX / FEKAFOS
	BACKFLOW KIT	•		•	•	•

GATE VALVES	DESCRIPTION	DRENAG / NOVA	DIG	GRINDER	FEKA	FEKABOX / FEKAFOS
	DN 50 FLAT BODY GATE VALVES				•	•
	DN 65 FLAT BODY GATE VALVES				•	•
	DN 80 FLAT BODY GATE VALVES				•	•
	DN 100 FLAT BODY GATE VALVES				•	•
	DN 150 FLAT BODY GATE VALVES				•	•
	DN 200 FLAT BODY GATE VALVES				•	•

CONNECTROS	DESCRIPTION	DRENAG / NOVA	DIG	GRINDER	FEKA	FEKABOX / FEKAFOS
	3" CONNECTOR FOR DIG 3700-5500		•			
	4" CONNECTOR FOR DIG 3700-5500		•			
	4" CONNECTOR FOR DIG 8500-11000		•			
	6" CONNECTOR FOR DIG 8500-11000		•			

SUPPORT PLATE	DESCRIPTION	DRENAG / NOVA	DIG	GRINDER	FEKA	FEKABOX / FEKAFOS
	SUPPORT PLATE KIT FOR: - GRINDER - FEKA 1400 - 1800 - FEKA VS			•	•	

LIFTING DEVICES	DESCRIPTION	DRENAG / NOVA	DIG	GRINDER	FEKA	FEKABOX / FEKAFOS
	DSD2 - LIFTING DEVICE (1400 - 1800 MODELS ONLY)	•		•	•	
	DSD2 - LIFTING DEVICE FOR FEKA VS 550-1200				•	
	ROTATION PREVENTION BRACKET FOR FEKA VS - VX				•	
	SPACER KIT X DRENAG 1400/1800	•				

LIFTING DEVICES	DESCRIPTION	DRENAG / NOVA	DIG	GRINDER	FEKA	FEKABOX / FEKAFOS
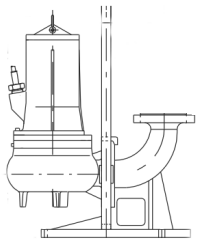	LIFTING DEVICE GRINDER - FEKA 2000 DN 50			•	•	
	LIFTING DEVICE FEKA 2500 DN 65				•	
	LIFTING DEVICE FEKA 3000 DN 80				•	
	LIFTING DEVICE FEKA 4000 DN 100				•	
	LIFTING DEVICE FEKA 6000 DN 150				•	
	LIFTING DEVICE FEKA 8000 DN 200				•	

Guide pipes not supplied

ADAPTERS	DESCRIPTION	DRENAG / NOVA	DIG	GRINDER	FEKA	FEKABOX / FEKAFOS
	DN 65 ADAPTER				•	
	DN 80 ADAPTER				•	
	DN 100 ADAPTER				•	

FEKA 2000 - 2" LIFTING DEVICE

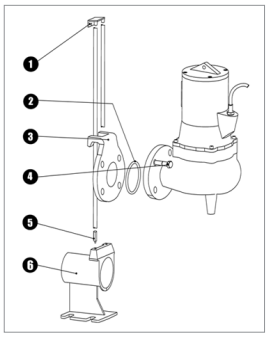

Complete with:

Pos. Description
1. Upper fixing bracket
2. Flange seal
3. Slide
4. Screw
5. Guide tube fastening hexagon
6. Threaded support

FEKA 2500 - 2"½ LIFTING DEVICE

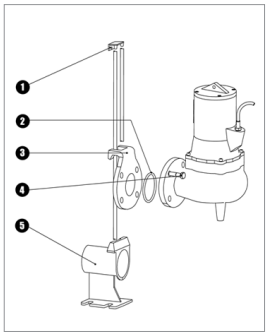

Complete with:

Pos. Description
1. Upper fixing bracket
2. Flange seal
3. Slide
4. Screw
5. Threaded support

FEKA 3000 LIFTING DEVICE - DN 80 / FEKA 4000- DN 100

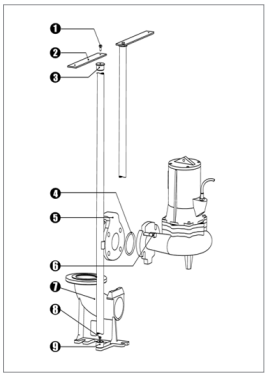

Complete with:

Pos. Description
1. Screw
2. Guide tube fastening bracket
3. Cylinder with rabbeting
4. Delivery flange seal
5. Slide
6. Screw
7. Flanged support
8. Screw
9. Guide tube bottom support

FEKA 6000 LIFTING DEVICE - DN 150 / FEKA 8000- DN 200

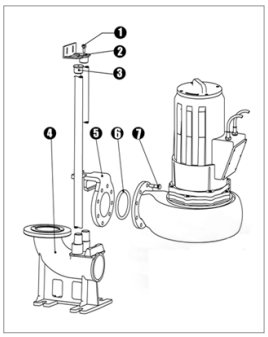

Complete with:

Pos. Description
1. Screw
2. Upper fixing bracket
3. Cylinder with rabbeting
4. Flanged support
5. Slide
6. Delivery flange seal
7. Flanged support

ELEVATIONS	DESCRIPTION	DRENAG / NOVA	DIG	GRINDER	FEKA	FEKABOX /FEKAFOS
	ELEVATION - HEIGHT 300 MM (ONLY FOR FEKAFOS 550)					•
	ELEVATION - HEIGHT 300 MM (ONLY FOR FEKAFOS 1200-2000-3800)					•

WELL	DESCRIPTION	DRENAG / NOVA	DIG	GRINDER	FEKA	FEKABOX /FEKAFOS
	DN 50 VALVE INSPECTION WELL					•
	DN 65 VALVE INSPECTION WELL					•

BATTERIES	DESCRIPTION	DRENAG / NOVA	DIG	GRINDER	FEKA	SOCCORRER	FEKABOX / FEKAFOS
	45 AH CAR BATTERY					•	
	60 AH CAR BATTERY					•	
	100 AH CAR BATTERY					•	
	180 AH CAR BATTERY					•	
	60 AH SEALED BATTERY					•	
	90 AH SEALED BATTERY					•	
	BATTERY SUPPORT (SUPPLIED ONLY FOR 100 AH, 45 AH, 60AH VERSIONS)					•	

DESCRIPTION		GENERAL FEATURES			FKV 65	FKV 80	FKV 100	PACKING DIMENSIONS L/A	L/B	H	WEIGHT kg
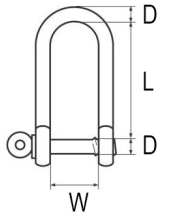	**KIT CHAIN W/SHACKLE 3MT A316 MAX 150KG**	- 2 schakles EN 13889:2009 AISI 316 - Chain 3mt: AISI 316 - MAX Load: 150Kg	A	13	•			95	145	85	1
			B	20.5							
			C	8							
			D	6							
			L	25							
			ø	4							
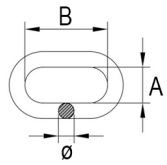	**KIT CHAIN W/SHACKLE 3MT A316 MAX 700KG**	- 2 schakles EN 13889:2009 AISI 316 - Chain 3mt: AISI 316 - MAX Load: 700Kg	A	25		•	•	130	175	90	4
			B	35							
			C	14.5							
			D	12							
			L	47							
			ø	8							

	FLYGT COUPLING ADAPTER DN65	- EN GJL250 - Screws M16x70: INOX A2 - Two Component Coating	•			300	220	225	9.25
	FLYGT COUPLING ADAPTER DN80			•		300	220	225	10.2
	FLYGT COUPLING ADAPTER DN100				•	330	240	245	15.6

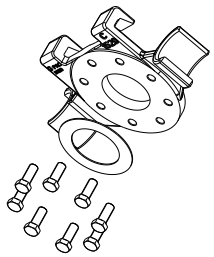	**COUPLING SYSTEM ADAPTOR FK65 - FEKA2500**	- EN GJL200 - Screws M16x40: INOX A2 - Water Painting	•			175	160	145	-
	COUPLING SYSTEM ADAPTOR FK80 - FEKA 3000			•		430	250	310	-
	COUPLING SYSTEM ADAPTOR FK100 - FEKA 4000				•				
	COUPLING SYSTEM ADAPTOR FK 65 - FEKA 3000		•						
	COUPLING SYSTEM ADAPTOR FK80 - FEKA 4000			•					

			DN	PN	THREADED							
	KIT FLANGE DN 65 PN16	- Galvanized Steel - Screws M16x70	65	16	2" 1/2	•			200	200	70	-
	KIT FLANGE DN 80 PN16		80	16	3"		•					
	KIT FLANGE DN100 PN16		100	16	4"			•	310	310	100	-

ELECTRO-MECHANICAL PROTECTION AND CONTROL PANELS

E-BOX

TECHNICAL DATA

Nominal power input voltage:
1x230 V - 3x230 V (M/T version only).
3x400 V (M/T version only) (possibility of selection).
Frequency: 50 - 60 Hz.
Maximum power of use: 5,5 kWatt + 5,5 kWatt.
Maximum current of use: 12 A + 12 A.
Start-up capacitor:
(only E-BOX 2D M40 µF) 40 microfarads.
Ambient temperature operation limits: -10 °C + 40 °C.
Storage temperature limit: -25 °C + 55 °C.
Air relative humidity: 90 % at 20 °C.
Protection class: IP 55.
Standard of reference for the construction of the control panels:
IEC - 60730.

APPLICATIONS

Electric control panel for automatic protection and operation using the level floats/probes, or level sensor, for 2 single-phase or three-phase (direct start) submersible electric pumps installed in pair. Thanks to the possibility of adjusting the pump protection current (1-12 A), the E-Box panel is compatible with many pump models. E-Box can control one or more pumps.

FEATURES

Supplied on self-extinguishing thermoplastic material box with wall fastening bracket.
The control panel ensures self-protection of the pumps from overload, short circuit with manual reset, and overtemperature with automatic reset.

Front panel components
General disconnector with padlockable door lock.
AUT-0-MAN operation selection pushbuttons.
Alarm RESET pushbutton.
Operation, stop, alarm notification lamps.

Panel internal components
Electric control card, protection fuses, contactors (in the M/T version).
Power input connection terminals, single phase (L-N in the M version), or three phase (L1-L2-L3 in the M/T version).
Electric pump connection terminals, single phase (L-N in the M version), or three phase (L1-L2-L3 in the M/T version).
Terminals for the connection of pressure switches, sensors, KK thermal protection, alarm notification N.O. contacts.
Operation selection mini dip switch: level floats or sensor, filling, or emptying.
Tanks, operation with one or two pumps.

E-Box functions
The E-Box control panel protects the electric pumps and controls them in sequence, based on the filling or emptying of the collection tanks, with water level detection system using a level sensor or 2 - 3 float switches (bulb or standard). The pump starting order is switched at each operating cycle. Using the DIP switch setting, E-Box can also control one single pump.

Emptying function
the first pump starts after the SP level has been exceeded (e.g. 2 metres), if the tank level does not decrease, the second pump will also start within 5 seconds to help the first.
The stop of the two pumps occurs based on the SP - DP value (e.g. with DP= 50% ,pump stop at 2 metres - 50% = 1 metre).

Filling function
the first pump starts when the DP level goes down (e.g. SP= 2 metres, DP= 50% pump start at 2 m - 50% = 1 metre) if the tank level does not increase, the second pump will also start within 5 seconds to help the first.
The stop of the two pumps occurs based on the SP value (e.g. 2 metres).

Two-float operation
Two-float systems must be used if the sizes of the water collection tank allow sufficient travel of the floats. Float B enables the operation of the first pump, float C starts the second pump. The stop of the two pumps occurs when the contact of float B opens

DAB PUMPS reserves the right to make modifications without notice.

ELECTRO-MECHANICAL PROTECTION AND CONTROL PANELS

E-BOX

Three-float operation

Three-float systems, preferred for the precision of pump start and stop that they offer, are recommended for narrow diameter tanks that do not allow regular travel of the floats.
Float B enables the operation of the first pump, float C starts the second pump.
The stop of the two pumps occurs when the contact of the third float A opens.

Level sensor operation

Level sensor systems are recommended when the use of a float is not possible (narrow tank/well, waste water, etc.).
The start and stop of the pump is ordered by two trimmers:
SP: max tank level (metres)
DP: min tank level (as a percentage of SP).

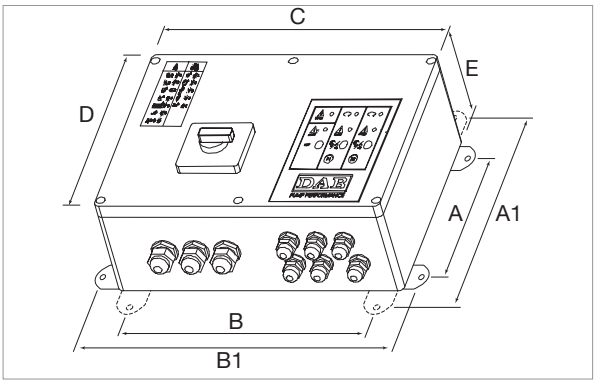

MODEL	A	A1	B	B1	C	D	E	WEIGHT kg
E-BOX 2D M/T	212	265	282	337	320	260	120	6.9
E-BOX 2D M 40 µF	212	265	282	337	320	260	120	6.9

MODEL	ELECTRICAL DATA					
	POWER INPUT 50 HZ	STARTING	P2 NOMINAL		MAX CURRENT A	CAPACITOR µF
			kW x2	HP x2		
E-BOX 2D M/T 12 A (for 2 pumps, single or three phase)	1X230 V~	direct	2.2	3	12+12	–
	3X230 V~		3	4		
	3X400 V~		5.5	7.5		
E-BOX 2D M 40 mF 12 A (for 2 single-phase pumps)	1X230 V~	direct	2.2	3	12+12	40

ELECTRIC PROTECTION AND CONTROL PANELS

E.BOX

TECHNICAL DATA

Nominal power input voltage:
e.box plus 1x 230 V / 3 x 230 V - 3 x 400 V (automatic selection).
e.box basic 1x 230 V.
Frequency: 50 - 60 Hz.
Maximum power of use:
e.box plus 5,5 kWatt + 5,5 kW.
e.box basic 2,2 kWatt + 2,2 kW.
Maximum current of use: 12 A + 12 A.
Starting capacitor: Supplied as accessory KIT.
Ambient temperature operation limits: -10 °C + 40 °C.
Air relative humidity: 90 % at 20 °C.
Max. altitude: 1000 a.s.l.
Protection class: IP 55.
Display: 1,6" for e.box PLUS D and e.box BASIC D models
Standard of reference for the construction of the control panels EN 60335-1.

APPLICATIONS

E.box is an electronic control panel that provides all the functions and protections required for the installation of a pumping set for draining, filling, and pressurisation purposes.

E.BOX PLUS is an electric control panel for automatic protection and operation of one or more submersible electric pumps or pressure booster pumps, both single and three phase, for domestic, civil, and industrial applications. Thanks to the current regulation possibility, the e.box control panel is compatible with all pump models with current between 1 and 12 A, with power up to 5,5 kW.

E.BOX BASIC is an electric control panel for automatic protection and operation of one or more single phase submersible electric pumps or pressure booster pumps for domestic applications. The e.box control panel is compatible with all single phase pump models with current between 1 and 12 A, with power up to 2,2 kW, as indicated in the product compatibility table.

CONTROL PANEL CONSTRUCTION

Supplied in an IP 55 protection class self-extinguishing thermoplastic material box, the control panel protects the electric pumps from abnormal conditions such as: overload and overtemperature (with automatic reset), short circuit (with fuses - Plus model only), pump current surges (amperometric protection), abnormal voltage, dry run, quick starts, pressure sensor fault, or inconsistency of the external protection commands.

FRONT PANEL COMPONENTS

- General disconnector with padlockable door lock.
- AUT-0-MAN operation selection pushbuttons.
- Alarm RESET pushbutton.
- Operation, stop, alarm notification lamps.
- Display, for PLUS D or BASIC D models.

PANEL INTERNAL COMPONENTS

- Electronic control card with protection fuses and contactors.
- Power input connection terminals, single phase (L-N in the Basic version), or three phase (L1-L2-L3 in the Plus version).
- Electric pump connection terminals, single phase (L-N in the BASIC version), or three phase (L1-L2-L3 in the PLUS version).
- Terminals for the connection of pressure switches, sensors, KK thermal protection, alarm notification N.O. contacts. Operation selection dip switch: level floats or sensor, tank filling and emptying, operation with one or two pumps also for the version with display.

SOFTWARE

For the models with display, the software
- During the first installation, provides step by step guidance in the selection of the correct settings based on the actual application.
- Makes the status of the control panel and the pumps clearly and immediately visible.
- When compared to the previous model, makes it easier to change the level settings, as operation of the control panel dip switch is no longer required.

DAB PUMPS reserves the right to make modifications without notice.

ELECTRIC PROTECTION AND CONTROL PANELS

E.BOX

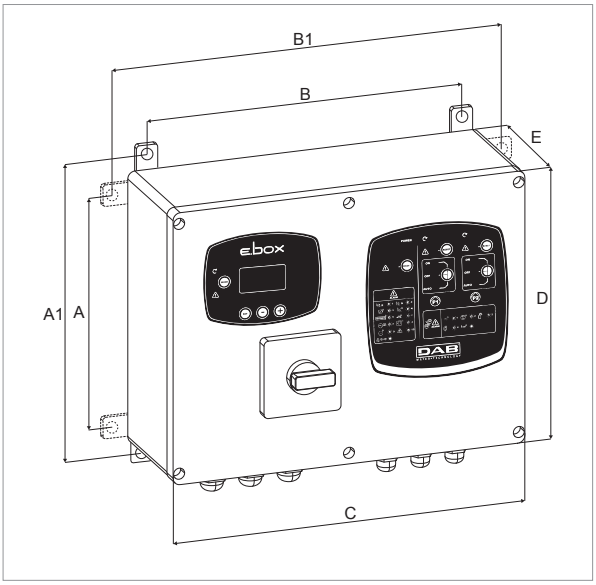

MODEL	A	A1	B	B1	C	D	E	PACKING DIMENSIONS			WEIGHT kg
								L/A	L/B	H	
E.BOX BASIC 230/50-60	212	265	282	337	320	260	120	250	430	310	4
E.BOX PLUS 230-400V/50-60	212	265	282	337	320	260	120	250	430	310	5
E.BOX BASIC D 230/50-60	212	265	282	337	320	260	120	250	430	310	4
E.BOX PLUS D 230-400V/50-60	212	265	282	337	320	260	120	250	430	310	5

MODEL	ELECTRICAL DATA					
	POWER INPUT 50 HZ	STARTING	P2 NOMINAL		MAX CURRENT A	DISPLAY
			kW x2	HP x2		
E.BOX BASIC 230/50-60	1X230 V~	direct	2.2	3	12+12	
E.BOX PLUS 230-400V/50-60	1X230 V~	direct	2.2	3	12+12	
	3X230 V~		3	4		
	3X400 V~		5.5	7.5		
E.BOX BASIC D 230/50-60	1X230 V~	direct	2.2	3	12+12	•
E.BOX PLUS D 230-400V/50-60	1X230 V~	direct	2.2	3	12+12	•
	3X230 V~		3	4		
	3X400 V~		5.5	7.5		

ELECTRO-MECHANICAL PROTECTION AND CONTROL PANELS

CONTROL MDN

TECHNICAL DATA

Power input voltage: 220 - 240 V.
Phases: 1.
Frequency: 50 Hz.
Rated power of use: 1,1 kW - 1,5 HP.
Maximum rated current of use: 12 A.
Starting capacitor: 40 µF - 450 V.
Ambient temperature operation limits: -10 °C +40 °C.
Protection class: IP 55.
Storage temperature: -10°C +60°C.
Air relative humidity: MAX 95%.
Electric construction: EN 60204-1 e EN 60439-1.
E.M.C. (Emissions): EN 55014 - EN 61000-3-2-1.

APPLICATIONS

Controller for the protection and the automatic and manual operation of DRENAG 1400 M and FEKA 1400 M single-phase electric pumps.
To be connected to a 2P+ 16 Amperes 220-240 V a.c. wall socket with disconnection switch and AM 10-12 Ampere fuse holder.

FEATURES

Supplied in plastic self-extinguishing box with pre-assembled bracket for wall installation.
Supplied with:
Manual reset overload protection micro circuit breaker.
Automatic reset thermal protection.
Remote switch for the operation of an optional float (available on request).
Terminal board for the connection of the electric pump and the float (if required, powered at 220-240 V).
1,5 m H07RN-F 3G1,5 power cable with EEC plug, 17-2P+Earth (16 A-220 V)
Electric connection diagram plate on the inside of the cover.

MODEL	A	B	C	E	WEIGHT kg
MDN	225	168	198	148	2.1

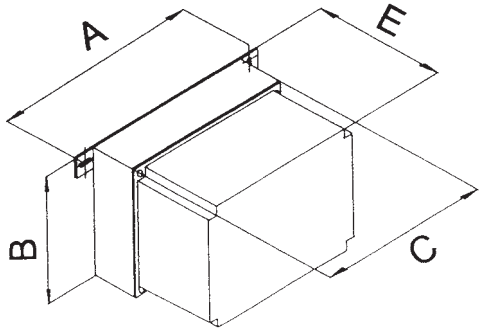

ELECTRO-MECHANICAL PROTECTION AND CONTROL PANELS

ED FOR 1 POMP

TECHNICAL DATA

Nominal power input voltage: 230V 1~ ± 10%
400V 3~ ± 10%
Frequency: 50-60 Hz.
Ambient temperature operation limits: -10 °C +40 °C.
Storage ambient temperature limit: -25 °C + 55 °C.
Relative humidity (without condensation):
50% at 40 °C MAX (90% a 20 °C).
Protection class: IP55.
Panel construction: to EN 60204-1 and EN 60439-1.

APPLICATIONS

Control panels for automatic protection and control, through digital controls (floats, pressure switches, timers, etc.), of 1 single-phase or three-phase electric pumps, with direct star/triangle start Y/D.

CONTROL PANEL CONSTRUCTION

Panel construction: to EN 60204-1 and EN 60439-1
Supplied on self-extinguishing thermoplastic material box with wall fastening bracket.
The control panel is self-protected and protects the electric pump from overload, short circuit and power loss, with manual reset, and from overtemperature, with automatic reset.

COMPLETE WITH:

Power line disconnect device with padlockable door lock handle.
Auxiliary circuit fuses.
Adjustable scale thermal magnetic protection on each motor.
Self-protected transformer to provide 24V supply for external controls.
Terminals for the connection of the electric pump, and the protection and minimum/maximum level control floats (or max/min pressure by means of pressure switches, etc.).
Powerless terminals for dry run, overflow, overpressure, sound or luminous alarm notification.
Terminals for the connection of the motor temperature sensors. Bridge fitted as standard, to be removed in case of use. (SEE THE TABLE)
Panel front Manual - Off - Automatic selector switch.
0" to 30 " adjustable switch timer, only for control panels with Y/D start.

FRONT PANEL NOTIFICATION:

Red lamp, overload protection activation.
Green lamp, pump in operation.
White lamp, auxiliary circuits working correctly.
Red lamp, dry run or maximum pressure.

DAB PUMPS reserves the right to make modifications without notice.

ED FOR 1 POMP - ELECTRO-MECHANICAL PROTECTION AND CONTROL PANELS

MODEL	ELECTRICAL DATA							
	POWER INPUT 50 HZ	STARTING	CAPACITOR	kW	HP	MAX CURRENT	THERMAL PROTECTION	MOTOR PROTECTOR KK
ED0.1M	1X220 - 240 V~	direct	-	0.0735	0.1	1	0.63-1A	
ED0,3M	1X220 - 240 V~	direct	-	0.2205	0.3	1.6	1-1.6A	
ED0,75M	1X220 - 240 V~	direct	-	0.55125	0.75	4	2.5-4A	
ED1M	1X220 - 240 V~	direct	-	0.735	1	6.3	4-6.3A	
ED1,5M	1X220 - 240 V~	direct	-	1.1025	1.5	10	6.3-10A	
ED2M	1X220 - 240 V~	direct	-	1.47	2	16	10-16A	
ED2,4M	1X220 - 240 V~	direct	-	1.764	2.4	20	16-20A	
ED3M 40UF	1X220 - 240 V~	direct	40	2.205	3	10	6.3-10A	•
ED3MHS	1X220 - 240 V~	direct	40µF+250µF	2.205	3	10	6.3-10A	•
ED0,08T	3X400 V~	direct	-	0.0588	0.08	0.63	0.4-0.63A	
ED0,5T	3X400 V~	direct	-	0.3675	0.5	1.6	1-1.6A	
ED1T	3X400 V~	direct	-	0.735	1	2.5	1.6-2.5A	
ED1,5T	3X400 V~	direct	-	1.1025	1.5	4	2.5-4A	
ED2,5T	3X400 V~	direct	-	1.8375	2.5	6.3	4-6.3A	•
ED4T	3X400 V~	direct	-	2.94	4	10	6.3-10A	•
ED8T	3X400 V~	direct	-	5.88	8	16	10-16A	•
ED11T	3X400 V~	direct	-	8.085	11	20	16-20A	•
ED14T	3X400 V~	direct	-	10.29	14	25	20-25A	•
ED15T	3X400 V~	direct	-	11.025	15	32	25-32A	•
ED7,5T SD	3X400 V~	Y/Δ	-	5.5125	7.5	16	10-16A	•
ED15T SD	3X400 V~	Y/Δ	-	11.025	15	25	18-25A	•
ED20T SD	3X400 V~	Y/Δ	-	14.7	20	32	23-32A	•
ED25T SD	3X400 V~	Y/Δ	-	18.375	25	32	32-45A	•
ED30T SD	3X400 V~	Y/Δ	-	22.05	30	63	40-63A	•

MODEL	A	B	C	D	E	PACKING DIMENSIONS			WEIGHT kg
						L/A	L/B	H	
ED0.1M	345	248	270	270	200	320	420	250	7
ED0,3M	345	248	270	270	200	320	420	250	7
ED0,75M	345	248	270	270	200	320	420	250	7
ED1M	345	248	270	270	200	320	420	250	7
ED1,5M	345	248	270	270	200	320	420	250	7
ED2M	345	248	270	270	200	320	420	250	7
ED2,4M	345	248	270	270	200	320	420	250	7
ED3M 40uF	345	248	270	270	200	320	420	250	7
ED3MHS	345	248	270	270	200	320	420	250	7
ED0,08T	345	248	270	270	200	320	420	250	7
ED0,5T	345	248	270	270	200	320	420	250	7
ED1T	345	248	270	270	200	320	420	250	7
ED1,5T	345	248	270	270	200	320	420	250	7
ED2,5T	345	248	270	270	200	320	420	250	7
ED4T	345	248	270	270	200	320	420	250	7
ED8T	345	248	270	270	200	320	420	250	7
ED11T	345	248	270	270	200	320	420	250	8
ED14T	345	248	270	270	200	320	420	250	8
ED15T	345	248	270	270	200	320	420	250	8
ED7,5T SD	345	335	270	360	200	320	420	250	9
ED15T SD	345	335	270	360	200	320	420	250	9
ED20T SD	345	335	270	360	255	360	450	450	9
ED25T SD	612	335	540	360	255	620	600	330	15
ED30T SD	612	335	540	360	255	620	600	330	15

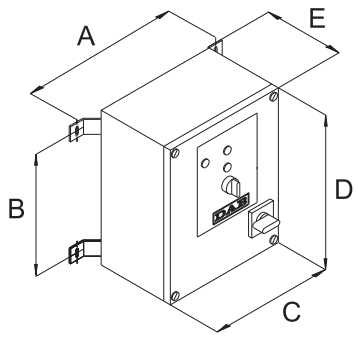

ELECTRO-MECHANICAL PROTECTION AND CONTROL PANELS

E2D FOR 2 PUMPS

indicative photo

TECHNICAL DATA

Nominal power input voltage:
230V 1~ ± 10%
400V 3~ ± 10%
Frequency: 50-60 Hz.
Ambient temperature operation limits: -10 °C to +40 °C.
Storage ambient temperature limit: -25 °C to + 55 °C.
Relative humidity (without condensation):
50% at 40 °C MAX (90% a 20 °C).
Protection class: IP55.
Control panel construction: According to EN 60204-1, and UNI EN 60439/-1.

APPLICATIONS

Control panels for automatic protection and control, through digital controls (floats, pressure switches, timers, etc.), of 2 single-phase or three-phase electric pumps, with direct star/triangle start Y/D.

CONTROL PANEL CONSTRUCTION

Panel construction to EN 60204-1 and EN 60439-1
Supplied on self-extinguishing thermoplastic material box with wall fastening bracket.
The control panel is self-protected and protects the electric pump from overload, short circuit and power loss, with manual reset, and from overtemperature, with automatic reset.

COMPLETE WITH:

Power line disconnect device with padlockable door lock handle.
Auxiliary circuit fuses.
Adjustable scale thermal magnetic protection on each motor.
Self-protected transformer to provide 24V supply for external controls.
Terminals for the connection of the electric pump, and the protection and minimum/maximum level control floats (or max/min pressure by means of pressure switches, etc.).
Powerless terminals for dry run, overflow, overpressure, sound or luminous alarm notification.
Terminals for the connection of the motor temperature sensors. Bridge fitted as standard, to be removed in case of use. (SEE THE TABLE)
Panel front Manual - Off - Automatic selector switch.
0" to 30 " adjustable switch timer, only for control panels with Y/D start.

FRONT PANEL NOTIFICATION:

Red lamp, overload protection activation.
Green lamp, pump in operation.
White lamp, auxiliary circuits working correctly.
Red lamp, dry run or maximum pressure.

ED FOR 2 PUMPS - ELECTRO-MECHANICAL PROTECTION AND CONTROL PANELS

MODEL	ELECTRICAL DATA							
	POWER INPUT 50 HZ	STARTING	CAPACITOR	kW	HP	MAX CURRENT	THERMAL PROTECTION	MOTOR PROTECTOR KK
E2D0,6M	1X220 - 240 V~	direct	-	0.2205	0.3	1.6	1-1.6A	
E2D1,5M	1X220 - 240 V~	direct	-	0.55125	0.75	4	2.5-4A	
E2D2M	1X220 - 240 V~	direct	-	0.735	1	6.3	4-6.3A	
E2D3M	1X220 - 240 V~	direct	-	1.1025	1.5	10	6.3-10A	
E2D4M	1X220 - 240 V~	direct	-	1.47	2	16	10-16A	
E2D4,8M	1X220 - 240 V~	direct	-	1.764	2.4	20	16-20A	
E2D6M 40UF	1X220 - 240 V~	direct	40	2.205	3	10	6.3-10A	•
E2D6M HS	1X220 - 240 V~	direct	40µF+250µF	2.205	3	10	6.3-10A	•
E2D2T	3X400 V~	direct	-	0.735	1	2.5	1.6-2.5A	
E2D3T	3X400 V~	direct	-	1.1025	1.5	4	2.5-4A	
E2D5T	3X400 V~	direct	-	1.8375	2.5	6.3	4-6.3A	•
E2D8T	3X400 V~	direct	-	2.94	4	10	6.3-10A	•
E2D15T	3X400 V~	direct	-	5.5125	7.5	16	10-16A	•
E2D22T	3X400 V~	direct	-	8.085	11	20	16-20A	•
E2D28T	3X400 V~	direct	-	10.29	14	25	20-25A	•
E2D30T	3X400 V~	direct	-	11.025	15	32	25-32A	•
E2D15T SD	3X400 V~	Y/Δ	-	5.5125	7.5	16	10-16A	•
E2D30T SD	3X400 V~	Y/Δ	-	11.025	15	25	18-25A	•
E2D40T SD	3X400 V~	Y/Δ	-	14.7	20	32	23-32A	•
E2D50T SD	3X400 V~	Y/Δ	-	18.375	25	45	32-45A	•
E2D60T SD	3X400 V~	Y/Δ	-	22.05	30	63	40-63A	•

MODEL	A	B	C	D	E	PACKING DIMENSIONS			WEIGHT kg
						L/A	L/B	H	
E2D0,6M	345	335	270	360	200	320	420	250	8
E2D1,5M	345	335	270	360	200	320	420	250	8
E2D2M	345	335	270	360	200	320	420	250	8
E2D3M	345	335	270	360	200	320	420	250	8
E2D4M	345	335	270	360	200	320	420	250	8
E2D4,8M	345	335	270	360	200	320	420	250	8
E2D6M 40uF	345	335	270	360	200	320	420	250	8
E2D6M HS	345	335	270	360	200	320	420	250	8
E2D2T	345	335	270	360	200	320	420	250	8
E2D3T	345	335	270	360	200	320	420	250	8
E2D5T	345	335	270	360	200	320	420	250	8
E2D8T	345	335	270	360	200	320	420	250	8
E2D15T	345	335	270	360	200	320	420	250	8
E2D22T	345	335	270	360	200	320	420	250	9
E2D28T	345	335	270	360	200	320	420	250	9
E2D30T	345	335	270	360	200	320	420	250	9
E2D15T SD	612	335	540	360	200	620	600	330	10
E2D30T SD	612	335	540	360	200	620	600	330	10
E2D40T SD	575	600	500	700	275	520	750	300	30
E2D50T SD	670	693	600	800	280	620	850	350	30
E2D60T SD	670	693	600	800	280	620	850	350	30

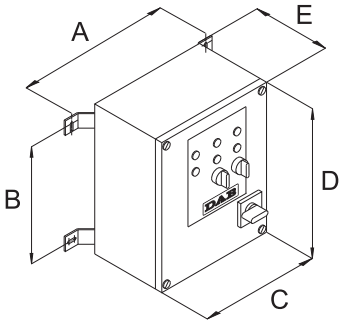

ELECTRO-MECHANICAL PROTECTION AND CONTROL PANELS

E3D FOR 3 PUMPS

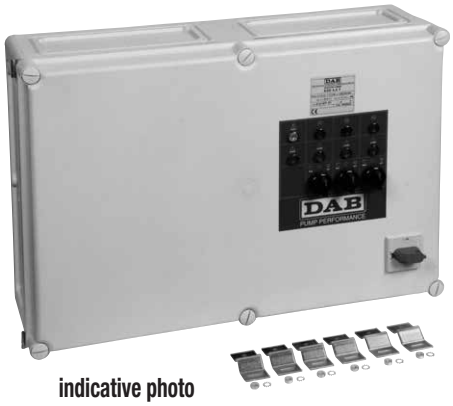

indicative photo

TECHNICAL DATA

Nominal power input voltage:
230V 1~ ± 10%
400V 3~ ± 10%
Frequency: 50-60 Hz.
Ambient temperature operation limits: -10 °C to +40 °C.
Storage ambient temperature limit: -25 °C to + 55 °C.
Relative humidity (without condensation):
50% at 40 °C MAX (90% a 20 °C).
Protection class: IP55.
Control panel construction: According to EN 60204-1, and UNI EN 60439/-1.

APPLICATIONS

Control panels for automatic protection and control, through digital controls (floats, pressure switches, timers, etc.), of 2 single-phase or three-phase electric pumps, with direct star/triangle start Y/D.

CONTROL PANEL CONSTRUCTION

Panel construction to EN 60204-1 and EN 60439-1
Supplied on self-extinguishing thermoplastic material box with wall fastening bracket.
The control panel is self-protected and protects the electric pump from overload, short circuit and power loss, with manual reset, and from overtemperature, with automatic reset.

COMPLETE WITH:

Power line disconnect device with padlockable door lock handle.
Auxiliary circuit fuses.
Adjustable scale thermal magnetic protection on each motor.
Self-protected transformer to provide 24V supply for external controls.
Terminals for the connection of the electric pump, and the protection and minimum/maximum level control floats (or max/min pressure by means of pressure switches, etc.).
Powerless terminals for dry run, overflow, overpressure, sound or luminous alarm notification.
Terminals for the connection of the motor temperature sensors. Bridge fitted as standard, to be removed in case of use. (SEE THE TABLE)
Panel front Manual - Off - Automatic selector switch.
0" to 30 " adjustable switch timer, only for control panels with Y/D start.

FRONT PANEL NOTIFICATION:

Red lamp, overload protection activation.
Green lamp, pump in operation.
White lamp, auxiliary circuits working correctly.
Red lamp, dry run or maximum pressure.

E3D FOR 3 PUMPS - ELECTRO-MECHANICAL PROTECTION AND CONTROL PANELS

MODEL	ELECTRICAL DATA							
	POWER INPUT 50 HZ	STARTING	CAPACITOR	kW	HP	MAX CURRENT	THERMAL PROTECTION	MOTOR PROTECTOR KK
E3D0,9M	1X220 - 240 V~	50-60	1.5	-	-	0.3	0.2205	
E3D2,25M	1X220 - 240 V~	50-60	2.5	-	-	0.75	0.55125	
E3D3M	1X220 - 240 V~	50-60	4	-	-	1	0.735	
E3D4,5M	1X220 - 240 V~	50-60	10	-	-	1.5	1.1025	
E3D6M	1X220 - 240 V~	50-60	3X4	-	-	2	1.47	
E3D7,2M	1X220 - 240 V~	50-60	3x6	-	-	2.4	1.764	
E3D9M 40UF	1X220 - 240 V~	50-60	10	40	400	3	2.205	•
E3D9M HS	1X220 - 240 V~	50-60	10	40µF+250µF	400+320	3	2.205	•
E3D3T	3X400 V~	50-60	1.5	-	-	1	0.735	
E3D4,5T	3X400 V~	50-60	2.5	-	-	1.5	1.1025	
E3D7,5T	3X400 V~	50-60	4	-	-	2.5	1.8375	•
E3D12T	3X400 V~	50-60	10	-	-	4	2.94	•
E3D22,5T	3X400 V~	50-60	3x2,5	-	-	7.5	5.5125	•
E3D33T	3X400 V~	50-60	3X4	-	-	11	8.085	•
E3D42T	3X400 V~	50-60	3x6	-	-	14	10.29	•
E3D45T	3X400 V~	50-60	3X10	-	-	15	11.025	•
E3D22,5T SD	3X400 V~	50-60	3x2,5	-	-	7.5	5.5125	•
E3D45T SD	3X400 V~	50-60	3x6	-	-	15	11.025	•
E3D60T SD	3X400 V~	50-60	3X10	-	-	20	14.7	•
E3D75T SD	3X400 V~	50-60	3X16	-	-	25	18.375	•
E3D90T SD	3X400 V~	50-60	3x25	-	-	30	22.05	•

MODEL	A	B	C	D	E	PACKING DIMENSIONS			WEIGHT kg
						L/A	L/B	H	
E3D0,9M	612	335	540	360	200	620	600	330	11
E3D2,25M	612	335	540	360	200	620	600	330	11
E3D3M	612	335	540	360	200	620	600	330	11
E3D4,5M	612	335	540	360	200	620	600	330	11
E3D6M	612	335	540	360	200	620	600	330	11
E3D7,2M	612	335	540	360	200	620	600	330	11
E3D9M 40uF	612	335	540	360	200	620	600	330	11
E3D9M HS	612	335	540	360	200	620	600	330	11
E3D3T	612	335	540	360	200	620	600	330	11
E3D4,5T	612	335	540	360	200	620	600	330	11
E3D7,5T	612	335	540	360	200	620	600	330	11
E3D12T	612	335	540	360	200	620	600	330	11
E3D22,5T	612	335	540	360	200	620	600	330	11
E3D33T	612	335	540	360	200	620	600	330	11
E3D42T	612	335	540	360	200	620	600	330	11
E3D45T	575	600	500	700	275	520	750	300	30
E3D22,5T SD	575	600	500	700	275	520	750	300	30
E3D45T SD	575	600	500	700	275	520	750	300	30
E3D60T SD	670	693	600	800	280	620	850	350	30
E3D75T SD	670	693	600	800	280	620	850	350	30
E3D90T SD	670	693	600	800	280	620	850	350	30

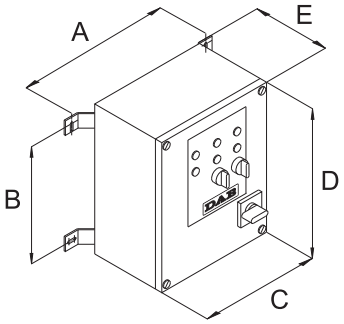

NOTES

DAB PUMPS reserves the right to make modifications without notice.

TECHNICAL APPENDIX

GENERAL INFORMATION

FUNDAMENTAL TERMS USED IN PUMPS

The following is a list of fundamental terms used in pumps and an explanation of their meanings. Their knowledge is necessary in order to discuss hydraulic pumps. All measurements are given in Technical units. Reference should be made to the chart for their international and Anglo-Saxon equivalents.

HEAD

Head means height, difference in level, gradient. For example if a pump has a flow of Q litres per second and a head of 30 metres, it means that it is capable of raising Q litres of liquid by 30 metres every second (therefore achieving a 30 metre gradient). For each given pump, the head is determined by its construction, such as the external diameter of the impeller and the speed of rotation, but it is not affected by the pumped liquid. This means that the pump as such can raise by 30 metres Q litres per second of water, petrol, mercury, etc.; the only difference in the three cases will be the power of the motor required.

SPECIFIC WEIGHT OF A LIQUID OR FLUID

The specific weight of a liquid or fluid is the weight per unit volume of the liquid/fluid. Specific weight is usually measured in kg/dm^3 or kg/l, remembering that 1 dm^3 equals 1 litre.

PRESSURE

Pressure means weight per unit of area (e.g. kg/cm^2), and it should not be confused with head. In the case of liquids, the pressure that the liquid exerts on a surface is given by the product of the head (or height) of the liquid, multiplied by its specific weight. For this reason, the column of several km of air on the earth's surface produces at sea level a pressure of about 1kg/cm^2 (equal to approx. 1 atmosphere). If the same column were of water rather than air, the pressure would be some 700 to 800 times greater, due to the fact that water has a specific weight approximately 700-800 times greater than that of air.
Bearing in mind that a column of water 10 m high is equivalent to approx. 1 kg/cm^2, if we placed a manometer on the delivery of the pump, the following pressure increases would be measured:

a) with petrol (specific weight 0,7 kg/dm^3) = 00,7 x 0,001 x 30 x 100 = 2,1 kg/cm^2
b) with water (specific weight 1,0 kg/dm^3) = 00,1 x 0,001 x 30 x 100 = 3,0 kg/cm^2
c) with mercury (specific weight 13,6 kg/dm^3) = 13,6 x 0,001 x 30 x 100 = 40,8 kg/cm^2

FLOW

Flow means the quantity of liquid or fluid that passes through a point, such as the delivery outlet of a pump, or a cross section of a pipe, in the set unit of time.
This can be measured in litres per minute (l/min), litres per second (l/s), cubic metres per hour (m^3/h) etc.
It should be noted that there is a perfect analogy between the flow of water through a pipe and the flow of electricity through a wire. It is sufficient to remember that hydraulic head is equivalent to electrical potential or voltage, and hydraulic flow is equivalent to electric current or amperes in electrotechnics. Even their behaviour is the same. Just as a thin wire restricts the flow of electricity more than one with a larger section, in the same way, a pipe of a smaller diameter offers a greater resistance to the flow of a liquid than one of a larger one. Just as the passage of electric current through the wire to a cable needs a voltage difference, in the same way, the flow of a liquid or fluid through a pipe needs a certain head.
There will never be a movement of liquid between two points of a perfectly horizontal pipe, and with the liquid at the same head in both points. This is due to the fact that, in the same way as the cable exerts a certain resistance to the passage of the electric current (electric resistance), the pipe also exerts a certain resistance to the passage of the fluid, the extent of which depends on the quality of the pipe (material, shape, presence of scale) and its section, and therefore the speed at which the fluid runs through the pipe. This resistance is called head loss.

HEAD LOSS

Head loss is that part of the head, possessed by the liquid, which is lost when passing through a pipe, a valve, a filter, etc. This loss cannot be recovered, as it is lost due to friction. Going back to the analogy between electrical and hydraulic phenomena, just as the losses in a cable increase in proportion with the current, so head losses are proportionally greater as the speed of the liquid increases. This means that the more the flow is restricted by scaled pipes, clogged filters, partially closed valves etc. the greater the head loss will be.

PUMP

A pump is a machine used to give a certain head to a liquid that passes through it. The head can be used to raise the liquid to a higher level, or to make it flow inside a pipe, or even in the open air, so that it covers a certain distance. The characteristics of a pump are:

a) **Flow** (the quantity of liquid that is moved through the pump in a unit of time)
b) **Head** (that is the height at which the pump is capable lifting the flow)

Based on the existing relationship between the flow and the head, it is possible to have:

a) Pumps with small flow and large head (piston pumps, rotary pumps, small centrifugal pumps).
b) Pumps with medium flow and medium head (centrifugal pumps in general).
c) Pumps with large flow and small head (helico-centrifugal pumps, propeller pumps).

DAB PUMPS reserves the right to make modifications without notice.

Centrifugal pumps, helico-centrifugal pumps and propeller pumps have a rotary motion and their speed is universally measured in revolutions per minute (rpm). With these machines operating at a given speed, for each given value of flow, there is only one value of head. This means that in order to increase or decrease the performance of these types of pumps, the operating speed must be varied accordingly. Basically, the liquid passing through the pump is supplied with energy that is related to the head and the speed of the liquid itself. This energy supplied within the unit of time is known as delivered power.

DELIVERED POWER

The delivered power is the power delivered by the pump to the liquid. The value of this delivered power depends on three factors: flow, head, and specific weight of the pumped liquid. The higher these three factors, the higher is the power delivered by the pump. For example, a pump delivering petrol does less work than when delivering sulphuric acid, because the specific weights of the two liquids are different.
In order to pump a liquid, a pump must be driven by a motor. In the vast majority of cases, this is either an electric, or an internal combustion motor. Electric motors use electric power, while internal combustion motors (engines) use oil or oil derivative fuels. The power that the pump needs in order to operate is called absorbed power.

DELIVERED POWER CALCULATION

Delivered power is normally expressed in kW or HP, indicating with:
Q = the flow
H = the head in metres of the column of liquid (m.c.l.)
γ = the specific weight of the liquid

The delivered power (P3) is calculated using one of the following equations:

$$P3 = \frac{\gamma\ (kg/dm^3) \times Q\ (l/s) \times H\ (m.c.l.)}{75} \text{ in HP}$$

$$P3 = \frac{\gamma\ (kg/dm^3) \times Q\ (m^3/h) \times H\ (m.c.l.)}{270} \text{ in HP}$$

$$P3 = \frac{\gamma\ (kg/dm^3) \times Q\ (l/s) \times H\ (m.c.l.)}{102} \text{ in kW}$$

$$P3 = \frac{\gamma\ (kg/dm^3) \times Q\ (l/min) \times H\ (m.c.l.)}{4500} \text{ in HP}$$

$$P3 = \frac{\gamma\ (kg/dm^3) \times Q\ (m^3/h) \times H\ (m.c.l.)}{367} \text{ in kW}$$

$$P3 = \frac{\gamma\ (kg/dm^3) \times Q\ (l/min) \times H\ (m.c.l.)}{6120} \text{ in kW}$$

ABSORBED POWER

Absorbed power is the power that the pump absorbs from the motor, to give to the liquid the delivered power discussed above.
Not all the absorbed power becomes delivered power, as some power is lost through friction, and even more within the pump itself, due to hydraulic losses. It is therefore clear that the delivered power is always less than the absorbed power, and the relation between the two is a number always lower than 1. This number is known as the efficiency.

YIELD

The efficiency is obtained by dividing the delivered power by the absorbed power, and is normally expressed as a percentage. For example, an efficiency of 75 % of a pump indicates that only 75 % of the absorbed power is converted into delivered power, with the remaining 25 % being lost due to friction. Therefore, the higher the efficiency of a pump, the smaller the portion of absorbed power being lost. If one then considers that the cost of energy relates to the absorbed power, it immediately becomes apparent just how important efficiency is. If we compare two pumps with the same 1 HP delivered power, but with an efficiency of 50 % for the first, and 60 % for the second, we can assume that the first one will need 2 HP to supply 1, while the second will only need 1,67 HP to achieve the same result. This means that the efficiency of a pump expresses, better than any other parameter, the quality of the pump and the related savings in terms of operating costs.

CALCULATION OF POWER OUTPUTS

P_1: is the power absorbed by the motor in kW (generally indicated by the wattmeter).
P_2: the power delivered by the motor in kW. This is measured at the brake (it basically is the power absorbed by the pump).
P_3: the power delivered by the pump in kW.

Power output of the motor $\eta = \frac{P_2}{P_1}$

Power output of the motor $\eta = \frac{P_3}{P_2}$

Power output of the motor $\eta = \frac{P_3}{P_1}$

THE HEAD OF A PUMP AND ITS MEASUREMENT

The head of a pump is always the differential head, or that given by the pump itself. This is generally expressed in metres. In order to ascertain the head of a surface pump, during its operation it is necessary to measure the value of the head both at the suction and at the delivery of the pump itself, making sure that the readings are taken at the same level, which is called the reference plane. Two cases are possible, depending on installation:

1) the value of the head at the suction is negative (i.e. below zero shown on the manometer): in this case, the level of the liquid collected is lower than the level of the suction inlet.

2) the value of the head at the suction is positive (i.e. above zero shown on the manometer) in this case, the level of the liquid collected is higher than the level of the suction inlet (flooded suction).

In the first case the head of the pump is given by the sum of the two readings, while in the second it is given by subtracting the value of the head at the suction inlet from the value at the delivery outlet.
Finally, it is necessary to make sure that the readings at the suction and the delivery have been taken from apertures of the same diameter, so that they are not distorted by a difference in the speed of the liquid at the point of measurement. Any correction is made by calculating the dynamic head, or that part of the head linked with the speed of the liquid, which means that part of the head that the liquid possesses at the measuring section, due to the fact that it is moving. The dynamic head Hd, expressed in metres, is calculated using the following formula:

$$Hd = \frac{v^2}{2g}$$

where: v = speed of the fluid at the measuring point, given in m/s
g = acceleration of gravity (9,81), expressed in m/s^2
$2g = 2 \times 9{,}81 = 19{,}62\ m/s^2$

The correction of the head is given by the difference between the dynamic head at the delivery, and the dynamic head- at the suction. It is therefore clear that if the readings upstream and downstream the pump have been taken on pipes of the same diameter, and therefore with the liquid flowing at the same speed, the correction is zero.

In order to ascertain the head of a submerged impeller pump, it is sufficient, during operation, to measure the head at the delivery port. In this case, the head of the pump is given by adding the value read to the dynamic head (always at the delivery port), and to the difference of level between the free surface of the liquid collected and the manometer.

VARIATION IN PUMP HEAD IN RELATION TO SPEED VARIATION

The performance of a pump is directly connected to its speed in rpm (**n**). Providing that there is no cavitation, the law of similarity may be used, which is expressed as follows:

$$Q_x = Q \times \frac{n_x}{n} \qquad H_x = H \times \left(\frac{n_x}{n}\right)^2 \qquad P_{2\text{-}x} = P_2 \times \left(\frac{n_x}{n}\right)^3$$

For example, when doubling the number of revolutions (**n_x**) one obtains:
Q_x = the value of the flow doubles
H_x = the value of the head is 4 times higher
$P_{2\text{-}x}$ = the value of the absorbed power is 8 times higher

Q - H - P2 are the values at speed **n**
Q_x - H_x - $P_{2\text{-}x}$ are the values at speed **n_x**.

DAB PUMPS reserves the right to make modifications without notice.

NOTES ON THE MOTORS OF ELECTRIC PUMPS

INDEX OF SYMBOLS USED
P_1 : POWER ABSORBED BY THE MOTOR IN kW.
P_2 : POWER DELIVERED BY THE MOTOR IN kW OR HP.
V ~ = AC POWER INPUT VOLTAGE AT THE MAINS.
Hz = FREQUENCY IN CYCLES PER SECOND OF THE POWER INPUT VOLTAGE.
I = CURRENT ABSORBED BY THE MOTOR IN AMPERES.
cosφ = POWER FACTOR.
$n^{1/min}$ = SPEED OF ROTATION IN RPM.
η = OUTPUT POWER (RELATION BETWEEN DEVELOPED POWER AND ABSORBED POWER P2/P1).
p = NUMBER OF POLES OF THE MOTOR.
Cn = NOMINAL TORQUE OF THE MOTOR.

NO-LOAD SPEED OF ROTATION

The no-load speed of single-phase and three-phase electric induction motors is given by the formula:

$$n^{1/min} = \frac{120 \times Hz}{p}$$

No-load speed of rotation $n^{1/min}$

FREQUENCY Hz	2 POLES	4 POLES
50	3000	1500
60	3600	1800

The full-load speed is 2 to 7 % lower than the no-load speed (2 to 7 % sliding).

CURRENT ABSORBED

Single-phase: $I = \frac{1000 \times P_2\,(kW)}{V \times \cos\varphi \times \eta}$ or: $I = \frac{736 \times P_2\,(HP)}{V \times \cos\varphi \times \eta}$

Three-phase: $I = \frac{1000 \times P_2\,(kW)}{1.73 \times V \times \cos\varphi \times \eta}$ or: $I = \frac{736 \times P_2\,(HP)}{1.73 \times V \times \cos\varphi \times \eta}$

ABSORBED POWER

Single-phase: $P_1\,(kW) = \frac{V \times I \times \cos\varphi}{1000}$

Three-phase: $P_1\,(kW) = \frac{1.73 \times V \times I \times \cos\varphi}{1000}$

POWER DELIVERED AT THE MOTOR AXIS

Single-phase: $P_2\,(kW) = \frac{V \times I \times \cos\varphi \times \eta}{1000}$ or: $P_2\,(HP) = \frac{V \times I \times \cos\varphi \times \eta}{736}$

Three-phase: $P_2\,(kW) = \frac{1{,}73 \times V \times I \times \cos\varphi \times \eta}{1000}$ or: $P_2\,(HP) = \frac{1{,}73 \times V \times I \times \cos\varphi \times \eta}{736}$

YIELD

$$\eta = \frac{P_2\,(kW)}{P_1\,(kW)}$$

POWER FACTOR

Single-phase: $\cos\varphi = \dfrac{P_2\,(kW) \times 1000}{V \times I \times \eta}$ or: $\cos\varphi = \dfrac{P_1\,(kW) \times 1000}{V \times I}$

Three-phase: $\cos\varphi = \dfrac{P_2\,(kW) \times 1000}{1{,}73 \times V \times I \times \eta}$ or: $\cos\varphi = \dfrac{P_1\,(kW) \times 1000}{1{,}73 \times V \times I}$

TORQUE FACTOR

$Cn = \dfrac{P_2\,(kW) \times 1000}{1.027 \times \mathbf{n}^{1/min}}$ in kgm

$Cn = \dfrac{P_2\,(HP) \times 736}{1.027 \times \mathbf{n}^{1/min}}$ in kgm

$Cn = \dfrac{702 \times HP}{\mathbf{n}^{1/min}}$ in decaNewtonmetres

RELATIONSHIP BETWEEN KW AND HP

1 HP = 0,736 kW 1 kW = 1,36 HP $\dfrac{HP}{1.36} = kW$ kW x 1,36 = HP

STARTING CURRENT (ISP)

The starting current (at switch on) of a motor is 4 to 8 times greater than the nominal current, depending on the power of the motor.
Isp = In x 4 ÷ 8

DETAILS ON CAPACITORS

The approximate current absorbed by a capacitor is:

$$I = \frac{6{,}28 \times F \times C \times V}{1.000.000}$$

Where:
I = current in Amps absorbed by the capacitor.
F = frequency in Hz of the applied voltage.
C = capacity of capacitor µF.
V = applied voltage.

Example:
The current absorbed by a 14 µF capacitor connected to a 220 Volt - 50 Hz power input is:

$$I = \frac{6{,}28 \times 50 \times 14 \times 220}{1.000.000} = 0{,}96 \text{ Amperes}$$

The approximate capacity of a capacitor is determined by:

$$C = \frac{I}{6{,}28 \times F \times V} \times 1.000.000$$

Example:
The capacity of a capacitor absorbing 1,4 Amps connected to a 220 Volt - 50 Hz power input is:

$$C = \frac{1{,}4}{6{,}28 \times 50 \times 220} \times 1{,}000{,}000 = 20{,}2\ \mu F$$

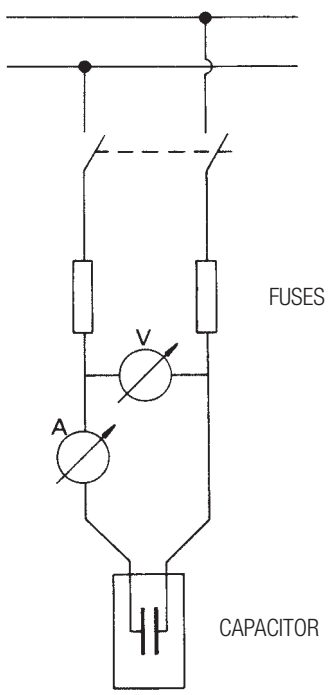

STAR-DELTA START-UP

The normally delta Δ connected motor is connected to the network using a star type connection. The current and the starting torque are both reduced to 1/3 of the value they would be if delta Δ connected.

PROTECTION

It is recommended that motors are connected to the power input network using appropriate three-fuse thermal magnetic circuit breakers, or in any case circuit breakers complying with current local regulations.

DAB PUMPS reserves the right to make modifications without notice.

LOAD LOSS AND SPEED TABLE

In order to accurately calculate **load losses and speed**, the following table is used:

FLOW			NEW GALVANISED PIPING									
			NOMINAL DIAMETERS: INCHES AND MM									
l/s	l/min	m³/h	1/2"	3/4"	1"	1"1/4	1"1/2	2"	2"1/2	3"	3"1/2	4"
			15,75	21,25	27	35,75	41,25	52,5	68	80,25	92,5	105
0,17	10	0,6	0,856	0,47	0,291							
			9,01	20,9	0,65				HAZEN WILLIAMS CALCULATION FORMULA (UNI 9489 13.3.3.6)			
0,25	15	0,9	1,284	0,705	0,4387	0,249						
			19,07	4,43	1,38	0,35						
0,33	20	1,2	1,712	0,94	0,582	0,332	0,25					
			32,47	7,55	2,35	0,6	0,3					
0,42	25	1,5	2,14	1,175	0,728	0,415	0,31					
			49,06	11,41	3,55	0,91	0,45					
0,5	30	1,8	2,568	1,411	0,874	0,498	0,37	0,23				
			68,74	15,98	4,98	1,27	0,63	0,2				
0,58	35	2,1	2,996	1,646	1,019	0,581	0,44	0,27				
			91,42	21,26	6,62	1,69	0,84	0,26				
0,67	40	2,4		1,881	1,165	0,664	0,5	0,31				
				27,22	8,48	2,16	1,08	0,33				
0,83	50	3		2,351	1,456	0,831	0,62	0,39	0,23			
				41,13	12,81	3,27	1,63	0,5	0,14			
1	60	3,6		2,821	1,747	0,997	0,75	0,46	0,28			
				57,63	17,95	4,58	2,28	0,7	0,2			
1,17	70	4,2		3,291	2,039	1,163	0,87	0,54	0,32	0,23		
				76,64	23,88	6,08	3,03	0,94	0,27	0,12		
1,33	80	4,8			2,33	1,329	1	0,62	0,37	0,26		
					30,57	7,79	3,88	1,2	34	0,15		
1,5	90	5,4			2,621	1,495	1,12	0,69	0,41	0,3		
					38,01	9,69	4,83	1,49	0,42	0,19		
1,67	100	6			2,912	1,661	1,25	0,77	0,46	0,33	0,25	
					46,19	11,77	5,86	1,81	0,51	0,23	0,11	
2,08	125	7,5			3,641	2,077	1,56	0,96	0,57	0,41	0,31	0,24
					69,79	17,79	8,86	2,74	0,78	0,35	0,17	0,09
2,5	150	9				2,492	1,87	1,16	0,69	0,49	0,37	0,29
						24,92	12,41	3,84	1,09	0,49	0,24	0,13
2,92	175	10,5				2,907	2,18	1,35	0,8	0,58	0,43	0,34
						33,15	16,51	5,1	1,45	0,65	0,32	0,17

White numbers: Load losses in m. for every 100 m of pipework

Green numbers: Water speed in m/sec

The table refers to galvanised pipework.

For other materials multiply as follows:
- 0,6 PVC pipes.
- 0,7 aluminium pipes.
- 0,8 laminated steel and stainless steel.

DAB PUMPS reserves the right to make modifications without notice.

LOAD LOSS AND SPEED TABLE

In order to accurately calculate **load losses and speed**, the following table is used:

FLOW			NEW GALVANISED PIPING									
			NOMINAL DIAMETERS: INCHES AND MM									
l/s	l/min	m³/h	1"1/4	1"1/2	2"	2"1/2	3"	3"1/2	4"	5"	6"	8"
			35,75	41,25	52,5	68	80,25	92,5	105	130	155	206
3,33	200	12	3,322	2,5	1,54	0,92	0,66	0,5	0,39	0,25		
			42,43	21,14	6,53	1,85	0,83	0,41	**0,22**	**0,08**		
4,17	250	15	4,156	3,12	1,93	1,15	0,82	0,62	**0,48**	**0,31**		
			64,12	31,94	9,87	2,8	1,25	1,63	**0,34**	**0,12**		
5	300	18		3,74	2,31	1,38	0,99	0,74	**0,58**	**0,38**	**0,27**	
				44,75	13,83	3,92	1,75	0,88	0,47	0,17	0,07	
6,67	400	24		4,99	3,08	1,84	1,32	0,99	0,77	0,5	0,35	
				76,2	23,55	6,68	2,98	1,49	0,8	0,28	0,12	
8,33	500	30			3,85	2,3	1,65	1,24	0,96	0,63	0,44	
					35,58	10,09	4,51	2,26	1,22	0,43	0,18	
10	600	36			4,62	2,75	1,98	1,49	1,16	0,75	0,53	0,3
					49,85	14,14	6,31	3,16	1,7	0,6	0,26	0,06
11,67	700	42				3,21	2,31	1,74	1,35	0,88	0,62	0,35
						18,81	8,4	4,2	2,27	0,8	0,34	0,09
13,33	800	48				3,67	2,64	1,99	1,54	1,01	0,71	0,4
						24,08	10,75	5,38	2,9	1,03	0,44	0,11
15	900	54				4,13	2,97	2,23	1,73	1,13	0,8	0,45
						29,94	13,37	6,69	3,61	1,28	0,54	0,14
16,67	1000	60				4,59	3,3	2,48	1,93	1,26	0,88	0,5
						36,39	16,24	8,13	4,39	1,55	0,66	0,16
20,83	1250	75					4,12	3,1	2,41	1,57	1,1	0,63
							24,54	12,29	6,63	2,34	0,99	0,25
25	1500	90					4,95	3,72	2,89	1,88	1,33	0,75
							34,39	17,22	9,29	3,28	1,39	0,35
29,17	1750	105						4,34	3,37	2,2	1,55	0,88
								22,9	12,35	4,37	1,85	0,46
33,33	2000	120						4,96	3,85	2,5	1,77	1
								29,31	15,81	5,59	2,37	0,59
41,67	2500	150							4,81	3,14	2,21	1,25
									23,89	8,44	3,59	0,9
50	3000	180		HAZEN WILLIAMS CALCULATION FORMULA (UNI 9489 13.3.3.6)						3,77	2,65	1,5
										11,83	5,02	1,26
66,67	4000	240								5,03	3,53	2
										20,15	8,55	2,14
83,33	5000	300									4,42	2,5
											12,93	3,23

White numbers: Load losses in m. for every 100 m of pipework

Green numbers: Water speed in m/sec

The table refers to galvanised pipework.

For other materials multiply as follows:
- 0,6 PVC pipes.
- 0,7 aluminium pipes.
- 0,8 laminated steel and stainless steel.

DAB PUMPS reserves the right to make modifications without notice.

HEAD LOSS
in cm of column of water in bends, gate valves, and foot valves

VELOCITY OF WATER IN m/s	SHARP EDGED BENDS					NORMAL BENDS					GATE VALVE	FOOT VALVE	NON-RETURN VALVE	HEAD LOSS ON EXIT FROM PIPES $V^2/2G$
						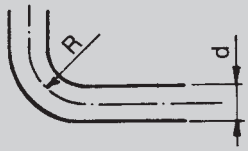								
	$\alpha = 30°$	$\alpha = 40°$	$\alpha = 60°$	$\alpha = 80°$	$\alpha = 90°$	$\frac{d}{R} = 0,4$	$\frac{d}{R} = 0,6$	$\frac{d}{R} = 0,8$	$\frac{d}{R} = 1$	$\frac{d}{R} = 1,5$				
0,10	0,03	0,04	0,05	0,07	008	0,07	0,08	0,01	0,0155	0,027	0,03	30	30	0,05
0,15	0,06	0,73	0,1	0,14	0.17	0,016	0,019	0,024	0,033	0,06	0,033	31	31	0,12
0,2	0,11	0,13	0,18	0,26	0.31	0,028	0,033	0,04	0,059	0,11	0,058	31	31	0,21
0,25	0,17	0,21	0,28	0,4	0.48	0,044	0,052	0,063	0,091	0,17	0,09	31	31	0,32
0,3	0,25	0,3	0,41	0,6	0.7	0,063	0,074	0,09	0,13	0,25	0,13	31	31	0,46
0,35	0,33	0,4	0,54	0,8	0.93	0,085	0,10	0,12	0,18	0,33	0,18	31	31	0,62
0,14	0,43	0,52	0,71	1,0	1.2	0,11	0,13	0,16	0,23	0,43	0,23	32	31	0,82
0,5	0,67	0,81	1,1	1,6	1.9	0,18	0,21	0,26	0,37	0,67	0,37	33	32	1,27
0,6	0,97	1,2	1,6	2,3	2.8	0,25	0,29	0,36	0,52	0,97	0,52	34	32	1,84
0,7	1,35	1,65	2,2	3,2	3.9	0,34	0,40	0,48	0,70	1,35	0,7	35	32	2,5
0,8	1,7	2,1	2,8	4,0	4.8	0,45	0,53	0,64	0,93	1,7	0,95	36	33	3,3
0,9	2,2	2,7	6	5,2	6.2	0,57	0,67	0,82	1,18	2,2	1,2	37	34	4,2
1,0	2,7	3,3	4,5	6,4	7.6	0,7	0,82	1,0	1,45	2,7	1,45	38	35	5,1
1,5	6,0	7,3	10,0	14,0	17.0	1,6	1,9	2,3	3,3	6,0	3,3	47	40	11,5
2,0	11,0	14,0	18,0	26,0	31.0	2,8	3,3	4,0	5,8	11,0	5,8	61	48	20,4
2,5	17,0	21,0	28,0	40,0	48.0	4,4	5,2	6,3	9,1	17,0	9,1	78	58	32,0
3,0	25,0	30,0	41,0	60,0	70.0	6,3	7,4	9,0	13,0	25,0	13,0	100	71	46,0
3,5	33,0	40,0	55,0	78,0	93.0	8,5	10,0	12,0	18,0	33,0	18,0	123	85	62,0
4,0	43,0	52,0	70,0	100,0	120.0	11,0	13,0	16,0	23,0	42,0	23,0	150	100	82,0
4,5	55,0	67,0	90,0	130,0	160.0	14,0	21,0	26,0	37,0	55,0	37,0	190	120	103,0
5,0	67,0	82,0	110,0	160,0	190.0	18,0	29,0	36,0	52,0	67,0	52,0	220	140	127,0

v = velocity of water in metres per second
d = diameter of pipes in m metres
h = head loss in cm of water column for each metre of pipework, calculated according to the Lang formula:

$$h = \lambda \times \frac{100}{d} \times \frac{v^2}{2g} \qquad \lambda = 0,02 + \frac{0.0018}{\sqrt{v \times d}}$$

The only loss in bends is that due to the contraction of the liquid stream when changing direction (the development of the curves must therefore be included in the length of the pipework); the head loss for gate valves has been determined through technical tests.
The head loss for gate valves and normal bends is equal to that of 5 m of straight pipework, while that of non-return valves is equal to 15 m.
The values given are for pipes with a completely smooth internal surface. In case of rough or scaled pipes, allowances must be made accordingly.

DAB PUMPS reserves the right to make modifications without notice.

VAPOUR TENSION AND SPECIFIC WEIGHT OF WATER AS A FUNCTION OF TEMPERATURE

VAPOUR TENSION (pV)

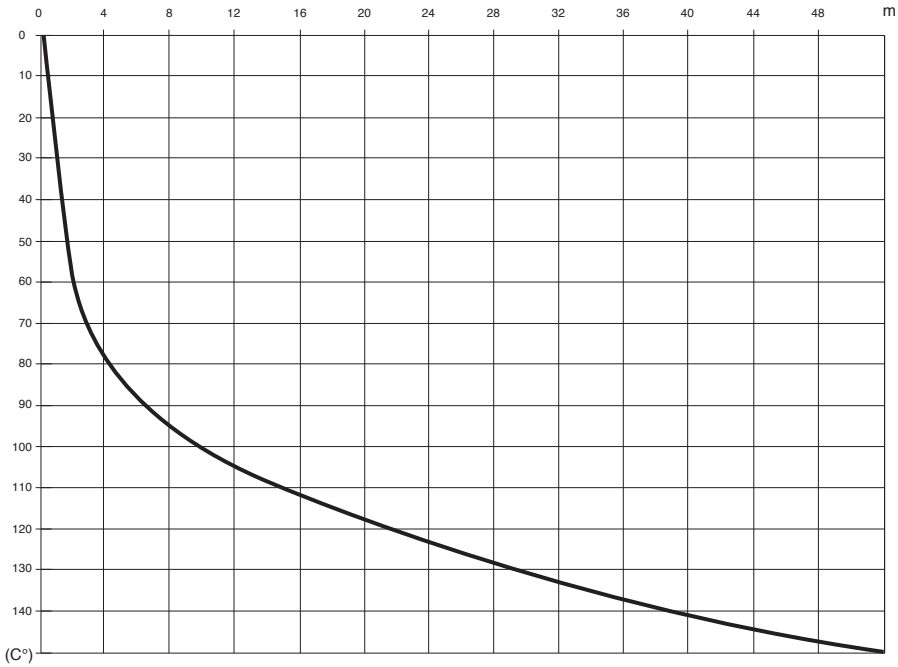

C°	m
10	0,121
20	0,22
30	0,387
40	0,675
50	1,147
60	1,888
70	3,014
80	4,67
90	7,035
100	10,33
110	14,83
120	20,85
130	28,744
140	38,97
150	52

$$\frac{Pb}{Y\,4°} - \frac{(Pb-Pv)}{Y\,t}$$

Pb and Pv in mCA

ATMOSPHERIC PRESSURE (pb)

DAB PUMPS reserves the right to make modifications without notice.

CONVERSION TABLE FOR UNITS OF MEASURE

CHARACTERISTIC	SYSTEM UNIT OF MEASURE	UNIT OF MEASURE	SYMBOL	CONVERSIONS		
				SYSTEM	INTERNATIONAL SYSTEM (SI)	IMPERIAL SYSTEM
LENGTH	Technical and International	metre decimetre centimetre millimetre	m dm cm mm	1 dm = 0,1 m 1 cm = 0,01 m 1 mm = 0,001 m		1 m = 3,28 ft 1 dm = 3,937 in 1 cm = 0,3937 in
	Imperial	inch foot yard	1", in 1", ft yd	1" = 25,4 mm 1" ft = 0,3048 m 1 yd = 0,9144 m		1 ft = 12" 1 yd = 3 ft = 26"
AREA	Technical and International	metres squared centimetres squared millimetres squared	m^2 cm^2 mm^2	1cm2 = 0,0001 m^2 1 mm2 = 0,01 cm^2		1m^2 = 1,196 sq.yd 1m^2 = 10,764 sq.ft 1 cm^2 = 0,155 sq.in
	Imperial	square inch square foot square yard	sq.in sq.ft sq.yd	1 sq.in = 6,45 cm^2 1 sq.ft = 0,0929 m^2 1 sq.yd = 0,836 m^2		1 sq.ft = 144 sq.in 1 sq.yd = 1,296 sq.in 1 sq.yd = 9 sq.ft
VOLUME	Technical and International	metre cubed decimetre cubed centimetre cubed litre cubed	m^3 cm^3 mm^3 l	1 m^3 = 1.000 dm^3 1 cm^3 = 0.001 m = 1.000 cm^3 1 mm^3 = 0.001 dm^3 1 l = dm^3		1 dm^3 = 0,22 Imp.gal 1 dm^3 = 0,264 US.gal 1 dm^3 = 61,0 cu.in
	Imperial	cubic inch cubic feet Imperial gallons U.S. gallons	cu.in cu.ft Imp.gal USA.gal	1 cu.in = 16,39 cm^3 1 cu.ft = 28,34 m^3 1 Imp.gal = 4,546 m^3 1 US.gal = 3,785 dm^3		1 Imp.gal = 1,201 US.gal 1 US.gal = 0,833 Imp.gal
TEMPERATURE	Technical and International	degrees Centigrade degrees Kelvin	°C °K	°C = °K-273 °K = °C + 273		°C = 5/9 x (°F - 32) °K = 5/9 x (°F - 32) + 273
	Imperial	degrees Fahrenheit	°F	°F = 9/5 x °C + 32		–
	freezing point of water at atmospheric pressure: boiling point of water at atmospheric pressure:			000°C = 273 °K = 032 °F 100°C = 373 °K = 212 °F		
WEIGHT and FORCE	Technical	kilogram	kg	–	1 kg = 9,81 N	1 kg = 2,203 lb
	International	Newton	N	1 N = 0,102 kg	–	1 N = 0,22546 lb
	Imperial	pound	lb	1 lB = 0,454 kg	1 lb = 4,452 N	–
SPECIFIC WEIGHT	Technical	kilogram per decimetre cubed	kg/dm^3	–	1 kg/dm^3 = 9,807 N/dm^3	1 kg/dm^3 = 62,46 lb/cu.ft
	International	Newton per decimetre cubed	N/dm^3	1 N/dm^3 = 0,102 kg/dm^3	–	1 N/dm^3 = 6,36 lb/cu.ft
	Imperial	pound per cubic foot	lb/dm^3	1 lb/cu.ft = 0,01600 kg/dm^3	1 lb/cu.ft = 0,160 N/dm^3	–
PRESSURE	Technical	atmospheres	kg/cm^2	–	1 kg/cm^2 = 98,067 kPa 1 kg/cm^2 = 0,9807 bar	1 kg/cm^2 = 14,22 psi
	International	Pascal kiloPascal bar	Pa kPa bar	1 kPa = 0,0102 kg/cm^2 1 bar = 1,02 kg/cm^2	1 kPa = 1.000 Pa 1 bar = 100.000 Pa	1 kPa = 0,145 psi 1 bar = 14,50 psi
	Imperial	pounds per square inch	psi	1 psi = 0,0703 kg/cm^2	1 psi = 0,06895 bar 1 psi = 6,894 kPa	–
FLOW	Technical	litres per minute litres per second metres cubed per hour	l/min l/s m^3/h	1 l/min = 0,0167 l/s 1 l/s = 3,6 m^3/h 1 m^3/h = 16,667 l/min	1 l/s = 0,001 m^3/s	1 l/min = 0,22 imp.g.p.m. 1 l/min = 0,264 US.g.p.m. 1 m^3/h = 3,666 imp.g.p.m. 1 m^3/h = 4,403 US.g.p.m.
	International	metres cubed per second	m^3/s	1 m^3/s = 1.000 l/s 1 m^3/s = 3.600 m^3/h	–	1 m^3/s = 13.198 imp.g.p.m. 1 m^3/s = 15.852 US.g.p.m.
	Imperial	imperial gallons per minute U.S. gallons per minute	Imp.g.p.m. US.g.p.m.	1 Imp.g.p.m. = 4,546 l/min 1 Imp.g.p.m. = 0,273 m^3/h 1 US.g.p.m. = 3,785 l/min 1 US.g.p.m. = 0,227 m^3/h	–	1 Imp.g.p.m. = 1,201 US.g.p.m. 1 US.g.p.m. = 0,833 Imp.g.p.m.
TORQUE	Technical	kilogram metre	kgm	–	1 kgm = 9,807 Nm	1 kgm = 7,233 ft.lb
	International	Newton metre	Nm	1 Nm = 0,102 kgm	–	1 Nm = 0,7376 ft.lb
	Imperial	foot pound	ft.lb	1 ft.lb = 0,138 kgm	1 ft.lb = 1,358 Nm	–
WORK and ENERGY	Technical	kilogram metre vapour-horsepower hour	kgm CVh		1 kgm = 9,807 J 1 CVh = 0,736 kWh	1 kgm = 7,233 ft.lb 1 Nm = 0,986 HP.hr.
	International	Joule kiloWatt hour	J kWhq	1 J = 0,102 kgm kWh = 1,36 CVh	–	1 Nm = 0,7376 ft.lb 1 Nm = 0,7376 ft.lb
	Imperial	foot pound Horsepower hour	ft.lb HP.hr.	1 ft.lb = 0,138 kgm 1 HP.hr. = 1,014 CVh	1 ft.lb = 0,358 Nm 1 HP.hr. = 0,746 kWh	–
POWER	Technical	Horse power	HP	1 HP = 0,736 kW	1 HP = 736 W	–
	International	Watt kiloWatt	W kW	1 W = 0,00136 Hp 1 kW = 1,36 Hp	1 kW = 1.000 W	–
KINETIC VISCOSITY	Technical	stokes centistokes	1 St 1 cSt	1 St = 1 cm^2/s 1 cSt = 0,01 St	1 St = 0.0001 m^2/s	1 St = 0.00107 ft^2/s
	International	m^2/s	m^2/s	1 m^2/s = 10.000 St	1 m^2/s = 10.000 cm^2/s	1 m^2/s = 10.764 ft^2/s
	Imperial	square foot per second	ft^2/s	1 ft^2/s = 929 St	1 ft^2/s = 0.0929 m^2/s	–

DAB PUMPS reserves the right to make modifications without notice.

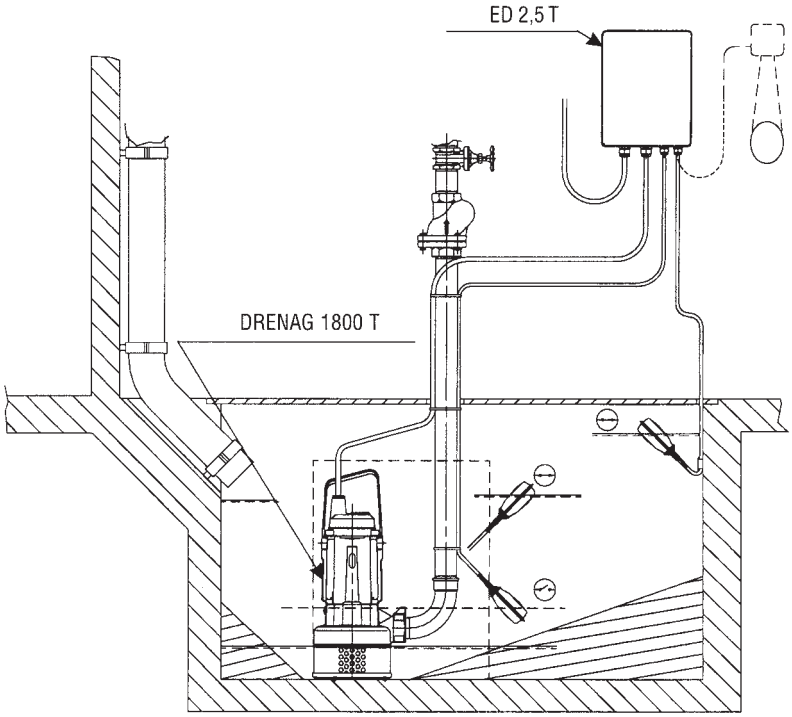

Fixed system with 1 DRENAG 1800 T electric pump with ED 2,5 T control panel, 1 MIN/MAX level control float, and 1 alarm control float.

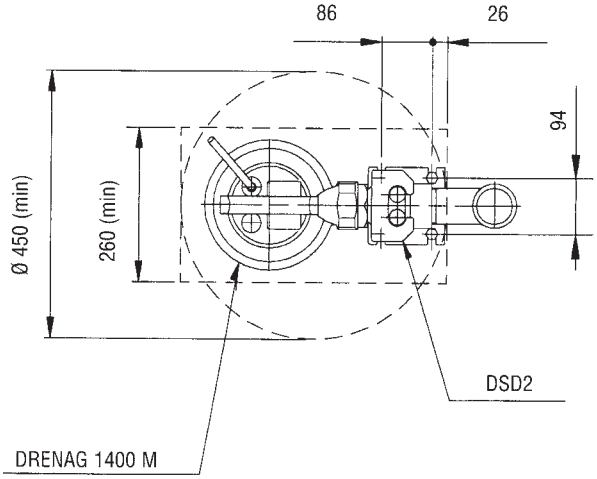

Minimum sizes of well cover for systems with DSD2 (layout view)

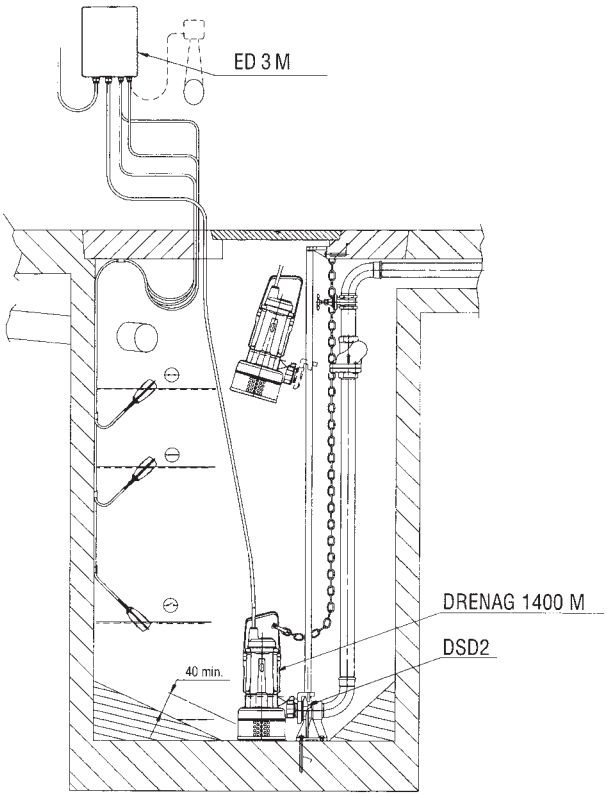

Fixed system with 1 DRENAG 1400 M electric pump with DSD2 device, ED 3 M electric control panel, 2 MIN/MAX level control floats, and 1 alarm control float.

DAB PUMPS reserves the right to make modifications without notice.

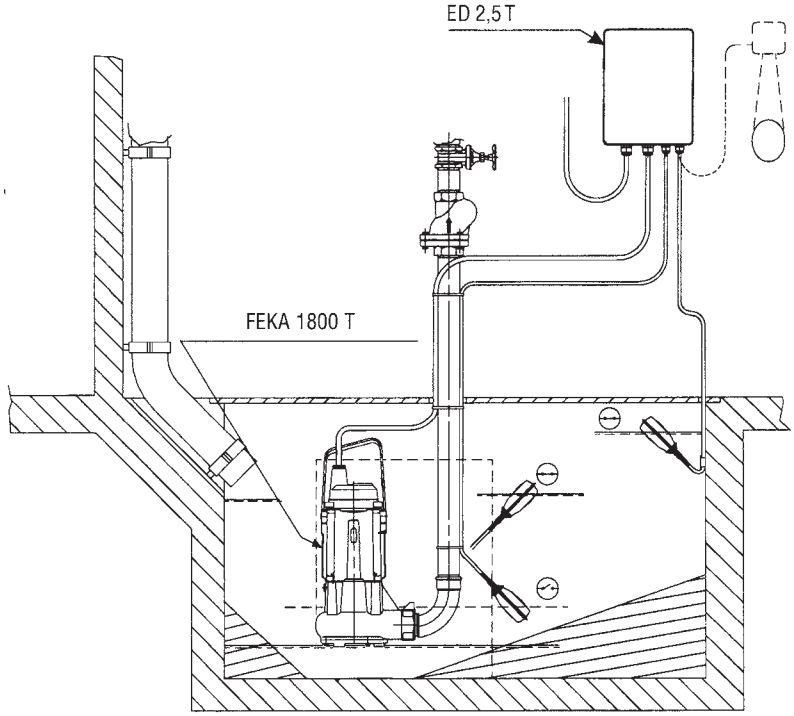

Fixed system with 1 FEKA 1800 T electric pump with ED 2,5 T control panel, 1 MIN/MAX level control float, and 1 alarm float.

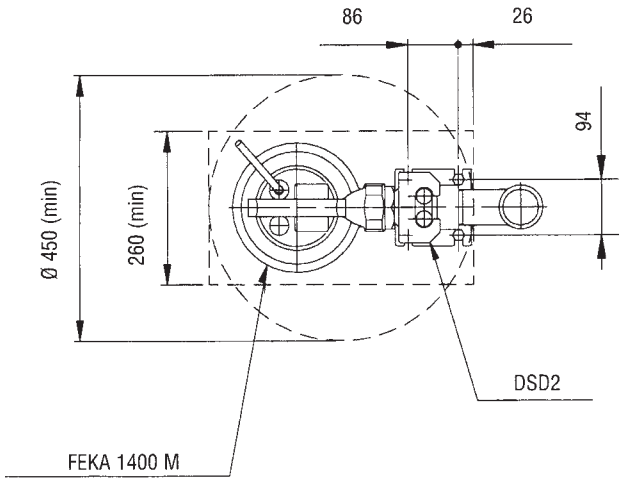

Minimum sizes of well cover for systems with DSD2 (layout view)

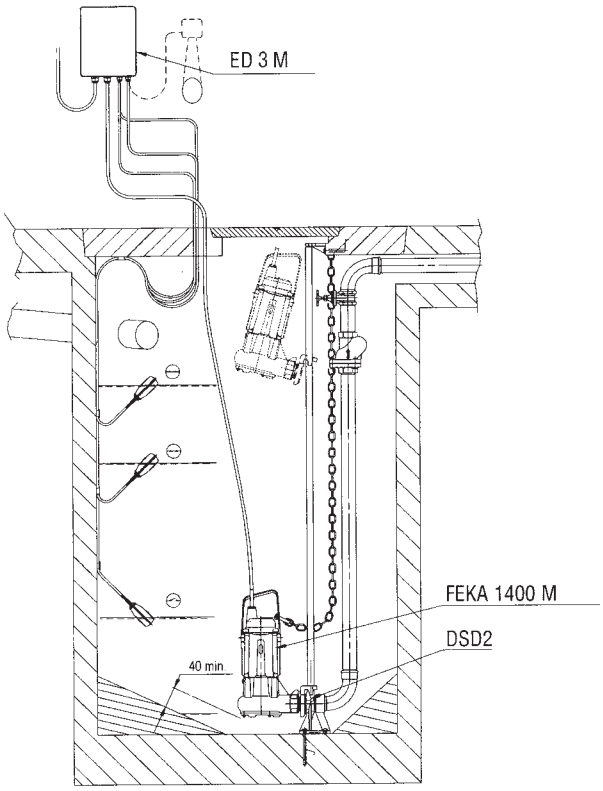

Fixed system with 1 FEKA 1400 M electric pump with DSD2 device, ED 3 M electric control panel, 2 MIN/MAX level control floats, and 1 alarm control float.

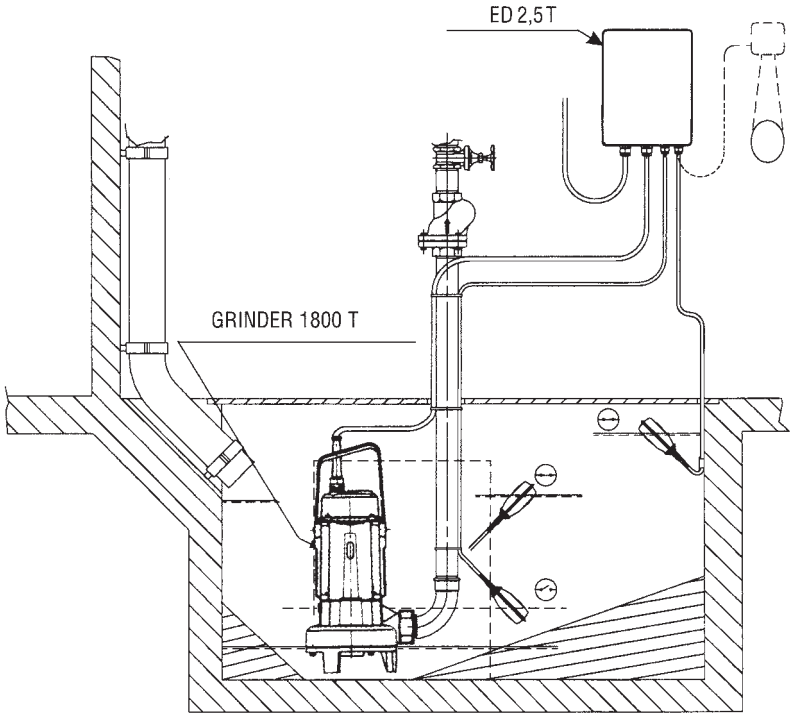

Fixed system with 1 GRINDER 1800 T electric pump with ED 2,5 T control panel, 1 MIN/MAX level control float, and 1 alarm float.

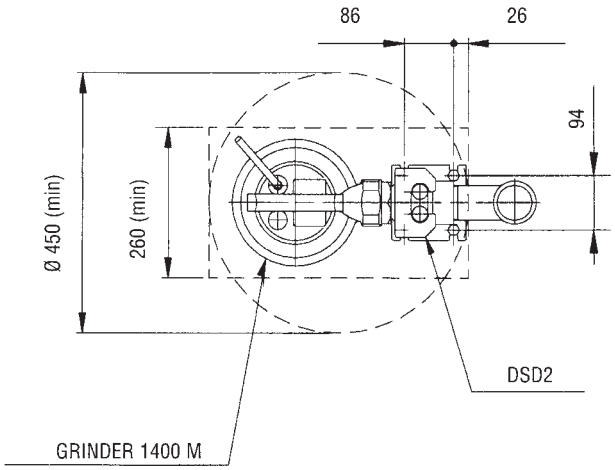

Minimum sizes of well cover for systems with DSD2 (layout view)

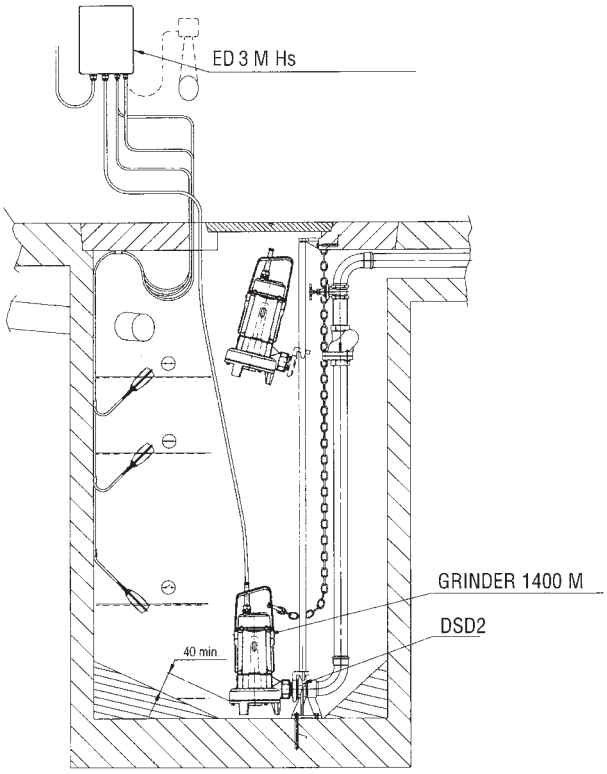

Fixed system with 1 GRINDER 1400 M electric pump with DSD2 device, ED 3 M electric control panel, 2 MIN/MAX level control floats, and 1 alarm control float.

DAB PUMPS reserves the right to make modifications without notice.

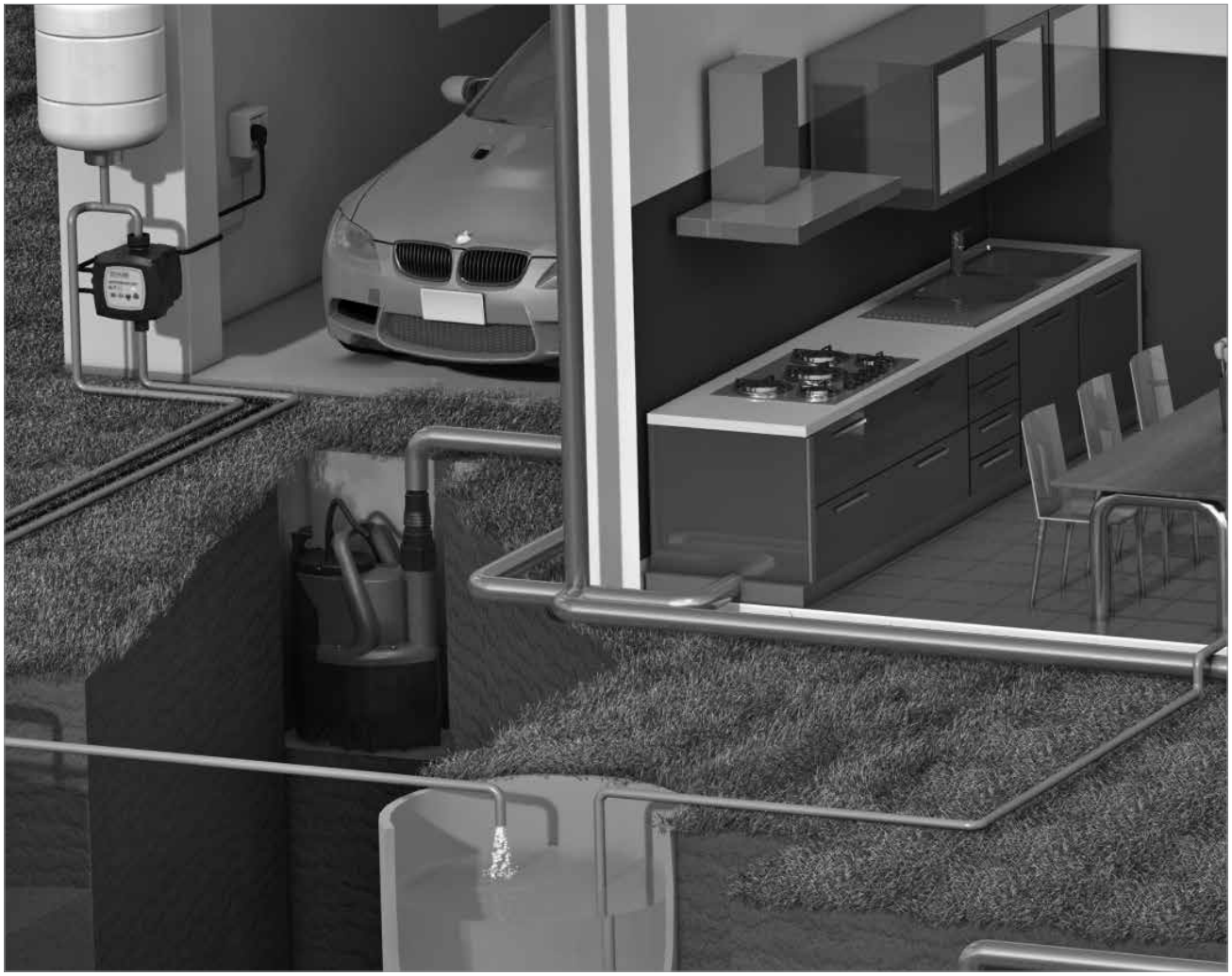

APPLICATIONS
Draining of water from basements and garages
Rain water collection wells
Draining wells
Lifting of water from tanks or rivers
Other applications
NOVA: ideal for pumping dirty water without fibres
FEKA: ideal from pumping sewage water from cesspools

FEATURES
Operating range: from 1 a 16 m³ with head of up to 10.2 metres.
Water temperature between 0 °C and 35 °C
Free passage for particles from 5 mm to 25 mm
Maximum immersion depth: 7 m
Light and easy to transport

IMPORTANT INFORMATION:
Install a support to ensure that the pump is not resting at the bottom
Do not install pipes of a smaller diameter than the delivery of the pump
Always install in the vertical position
For models with float, to ensure automatic operation, make sure that the arm or the float can move freely, without being impaired by the installation.
Do not connect the electric power input if there are people in contact with the water in the tank where the pump is installed.
Submerge the pump completely to avoid motor overheating
Make sure that there are no air pockets in the pump.

UNI EN 12050-1

PRINCIPLES FOR THE CONSTRUCTION AND TESTING OF LIFTING SYSTEMS FOR WASTE WATER CONTAINING FAECAL MATTER

CONTENTS

The standard applies to lifting systems for waste water containing faecal matter, which may also be used for the treatment of waste water not containing faecal matter, for the draining of parts of buildings and sites below the high water mark, to avoid backflow of waste water in the building. This part of the European standard contains some general requirements, basic principles for constructions and testing, as well as information on materials and the assessment of conformity.

TANK REQUIREMENTS

With the exception of the inlet, outlet, and ventilation ports, the collection tanks must be sealed, to prevent water and smell from escaping. The inside of the collection tank of a lifting system for faecal matter can be considered as an zone containing potentially explosive gases. In this sense, the tank and other mechanical connectors are not subjected to any special requirements, provided that the necessary measures are implemented, to avoid explosions inside the tank.

CONSTRUCTION PRINCIPLES

Pumping of solids

Faecal matter lifting systems must be capable of pumping waste water in accordance with the requirements of EN 12056-1, including all the solid matter normally contained in domestic waste water. They must be designed in a way that avoids the accumulation of solid matter.

Pipe connection

The size of the input, discharge, and ventilation connections must make it possible to use standard size piping. Connectors must be flexible and capable of withstanding the maximum delivery pressure of the pump without leaks.

Minimum sizes of the ventilation piping

The connector of the ventilation piping must have a minimum nominal diameter of at least DN 50.

Minimum passage of the system

The free passage in the lifting system for faecal matter, at any point between the point of entry of the faecal matter in the system, and the pumping device, must be 40 mm minimum.

Minimum size of the discharge connection for faecal matter lifting systems without maceration

Discharge connectors of faecal matters lifting points without maceration must have a minimum diameter of at least DN 80. The free passage of the check valve must be 60 mm minimum. When required, the discharge connection must be at least DN 50, and the free passage of the check valve must be at least 50 mm.

Minimum size of the discharge piping for faecal matter lifting systems with maceration

The discharge connections, the discharge piping, and the check valves for faecal matter lifting systems with maceration must have a minimum diameter of at least DN 32.

Fastening devices

Faecal matter lifting systems must include fastening devices to avoid rotation or floating.

DAB PUMPS reserves the right to make modifications without notice.

EXAMPLES OF INSTALLATION

Installation can be both above and under ground, when the overcoming of soil barriers is required for connection to the sewage network, including any that might be far. FEKAFOS may be installed in cellars, garages, underground wells.

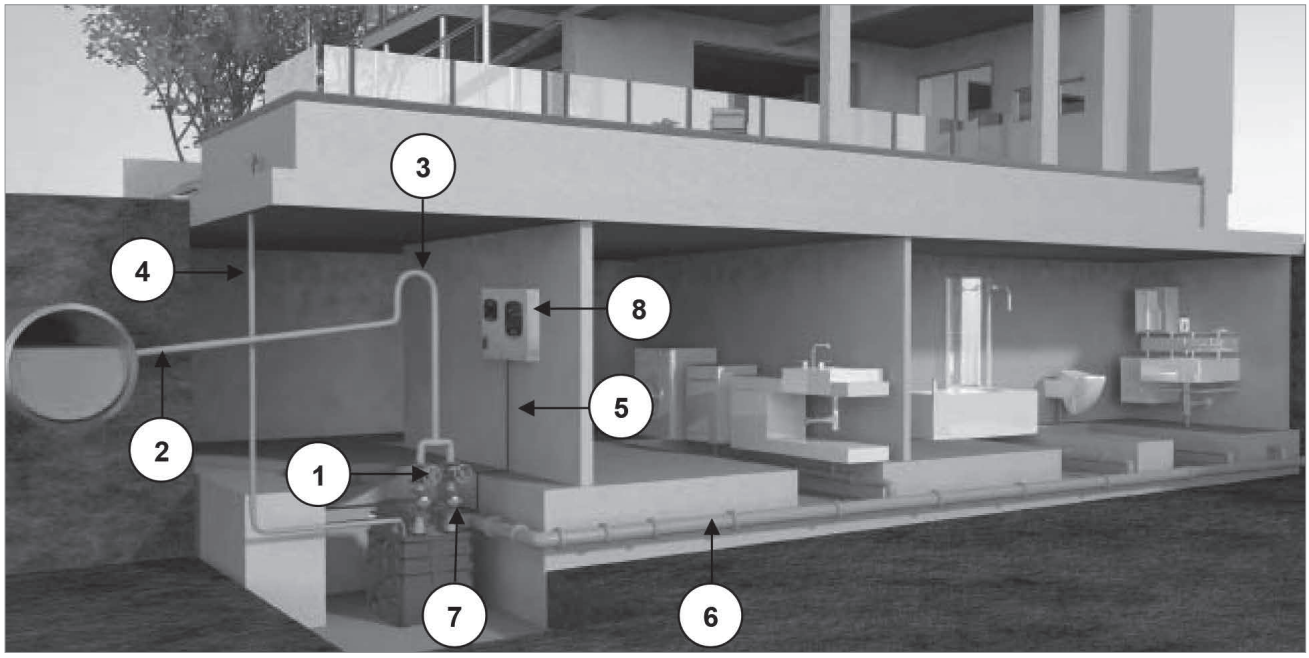

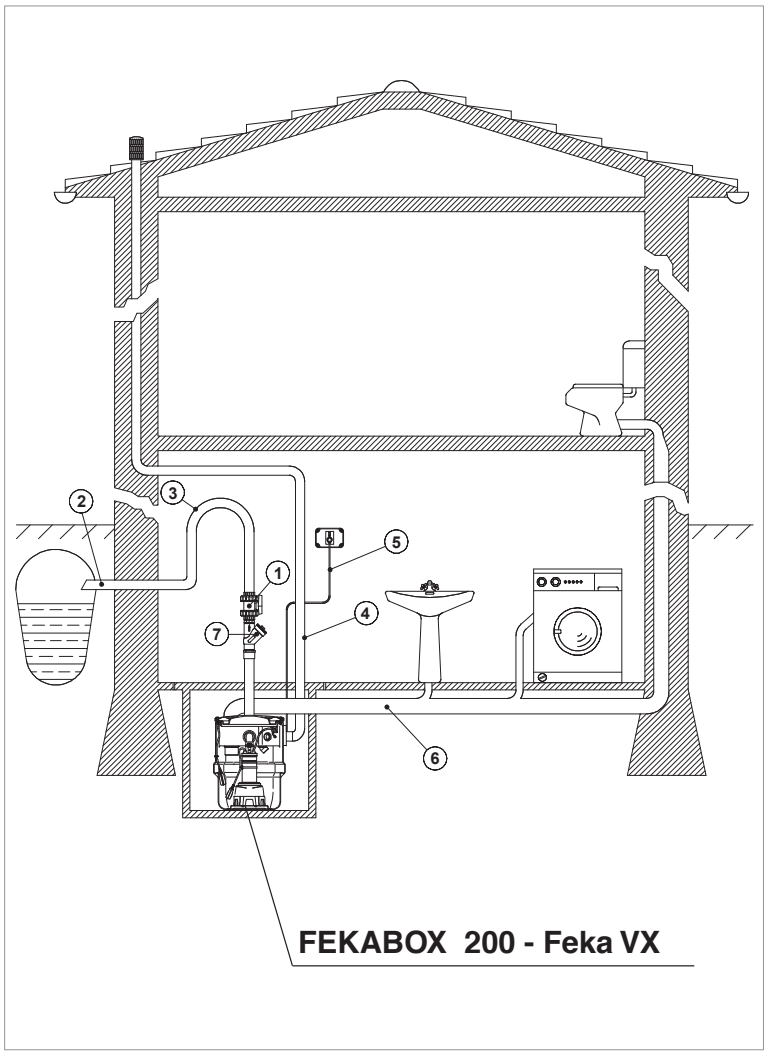

REFERENCE	DESCRIPTION
1	Ball check valve
2	Delivery
3	Siphon
4	Ventilation
5	Power input cable
6	Collection
7	Non-return valve
8	E-BOX control panel (FEKAFOS models only)

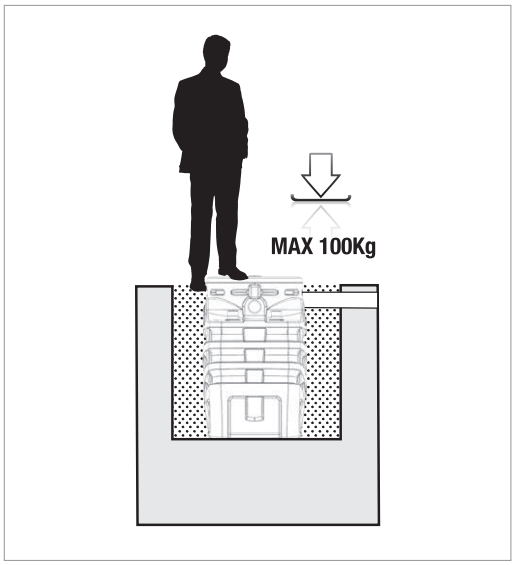

Outdoor installation without supporting structure, buried, with sand. It can be walked on.

POSITIONING OF FEKAFOS 1200-3800 PUMPING STATIONS

Installed underground outside a building; pour a ring of concrete going from the support base up to the first rib of the tank.

In case of ground water, build the basement in concrete, fill the tank with water up to the second rib, and fill the outside of the tank with concrete up to the same height.

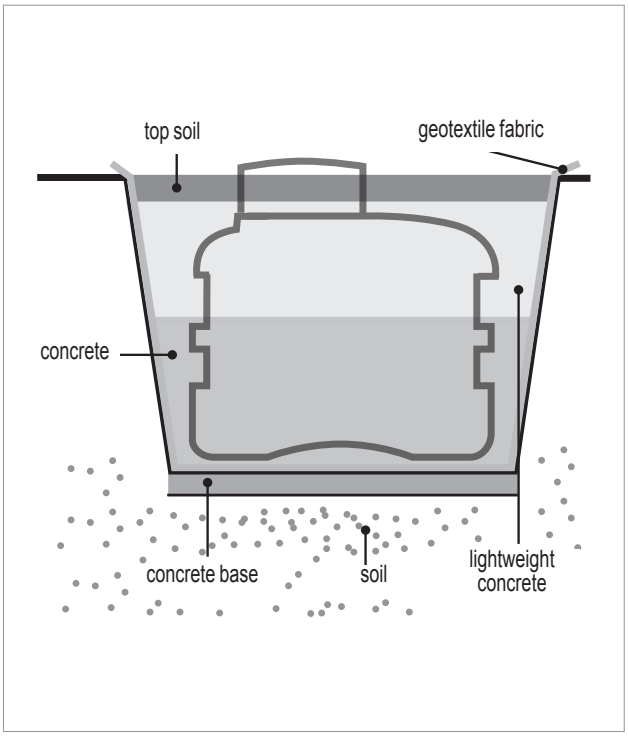

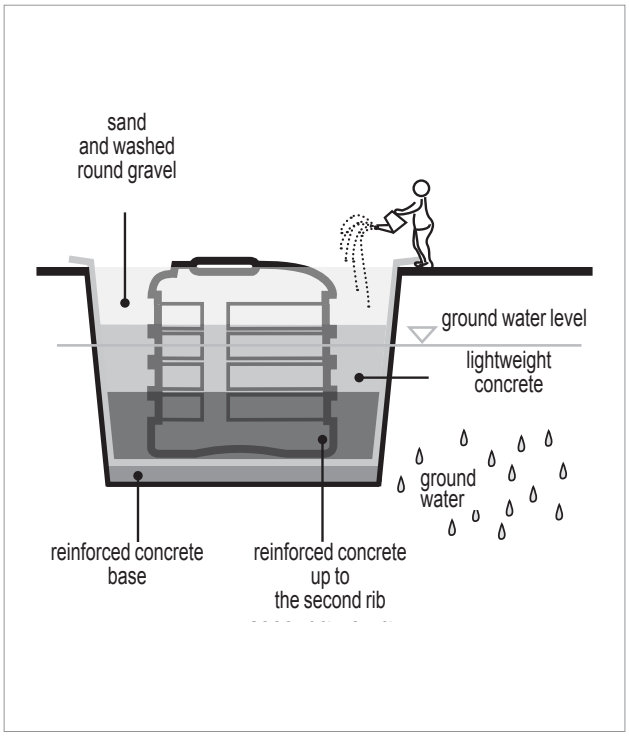

DAB PUMPS reserves the right to make modifications without notice.

NOTES

NOTES

DAB PUMPS reserves the right to make modifications without notice.

FSC
www.fsc.org
MISTO
Carta da fonti gestite
in maniera responsabile
FSC® C114821

Via Marco Polo, 14 - 35035 Mestrino (PD) Italy - Tel. +39.049.5125000 - Fax +39.049.5125950
www.dabpumps.com

DNA® PUMPS SELECTOR

On-line product selection

DAB PUMPS LTD.
Unit 4 and 5, Stortford Hall Industrial Park,
Dunmow Road,
Bishops Stortford,
Herts
CM23 5GZ - UK
salesuk@dwtgroup.com
Tel. +44 1279 652 776
Fax +44 1279 657 727

DAB PUMPS B.V.
Brusselstraat 150
B-1702 Groot-Bijgaarden - Belgium
info.belgium@dwtgroup.com
Tel. +32 2 4668353
Fax +32 2 4669218

DAB PUMPS B.V.
Albert Einsteinweg, 4
5151 DL Drunen - Nederland
info.netherlands@dwtgroup.com
Tel. +31 416 387280
Fax +31 416 387299

DAB PUMPEN DEUTSCHLAND GmbH
Tackweg 11
D - 47918 Tönisvorst - Germany
info.germany@dwtgroup.com
Tel. +49 2151 82136-0
Fax +49 2151 82136-36

DAB PUMPS IBERICA S.L.
Avenida de Castilla nr.1 Local 14
28830 - San Fernando De Henares - Madrid
Spain
info.spain@dwtgroup.com
Tel. +34 91 6569545
Fax: +34 91 6569676

DAB PRODUCTION HUNGARY KFT.
H-8800
Nagykanizsa, Buda Ernó u.5
Hungary
Tel. +36 93501700

DAB PUMPS POLAND Sp. z o.o.
Mokotow Marynarska
ul. Postępu 15C
02-676 Warszawa - Poland
Tel. +48 223 81 6085

DAB UKRAINE Representative Office
Regus Horizon Park
4 M. Hrinchenka St, suit 147
03680 Kiev - Ukraine
Tel. +38 044 391 59 43

OOO DAB PUMPS
Novgorodskaya str, 1, bld G, office 308
127247 Moscow - Russia
info.russia@dwtgroup.com
Tel. +7 495 122 00 35
Fax +7 495 122 00 36

DAB PUMPS INC.
3226 Benchmark Drive
Ladson, SC 29456 - USA
info.usa@dwtgroup.com
Tel. 1-843-824-6332
Toll Free 1-866-896-4DAB (4322)
Fax 1-843-797-3366

DWT SOUTH AFRICA
Podium at Menlyn,
3rd Floor, Unit 3001b, 43 Ingersol Road,
C/O Lois and Atterbury street,
Menlyn, Pretoria, 0181 - South-Africa
info.sa@dwtgroup.com
Tel. +27 12 361 3997
Fax +27 12 361 3137

DAB PUMPS CHINA
No.40 Kaituo Road, Qingdao Economic & Technological
Development Zone
Qingdao City, Shandong Province - China
PC: 266500
info.china@dwtgroup.com
Tel. +8653286812030-6270
Fax +8653286812210

DAB PUMPS DE MÉXICO, S.A. DE C.V.
Av Gral Álvaro Obregón 270, oficina 355
Hipódromo, Cuauhtémoc 06100
México, D.F.
Tel. +52 55 6719 0493

60171427 - 05/2015